

Nortel Communication Server 1000

WLAN IP Telephony Installation and Commissioning

Release: 7.0
Document Revision: 05.01

www.nortel.com

NN43001-504

Nortel Communication Server 1000
Release: 7.0
Publication: NN43001-504
Document release date: 4 June 2010

Copyright © 2003-2010 Nortel Networks. All Rights Reserved.

While the information in this document is believed to be accurate and reliable, except as otherwise expressly agreed to in writing NORTEL PROVIDES THIS DOCUMENT "AS IS" WITHOUT WARRANTY OR CONDITION OF ANY KIND, EITHER EXPRESS OR IMPLIED. The information and/or products described in this document are subject to change without notice.

Nortel, Nortel Networks, the Nortel logo, and the Globemark are trademarks of Nortel Networks.

All other trademarks are the property of their respective owners.

Contents

New in this release 11
Other changes 11
Revision history 11

How to get help 13
Getting help from the Nortel Web site 13
Getting help over the phone from a Nortel Solutions Center 13
Getting help from a specialist by using an Express Routing Code 14
Getting help through a Nortel distributor or reseller 14

Overview 15
Subject 15
Resources 16
Declaration of conformity 16
Shielded cable 17
Wireless telephone network description 17
Call Server 19
DHCP Server 20
DHCP options 20
TFTP Server 20
Firewall 20
WLAN Handset 2210/2211/2212 and WLAN Handset 6120/6140 20
Components 22
WLAN IP Telephony Manager 2245 (used with SpectraLink Voice Priority QoS method) 22
Nortel VoIP System 22
WiFi Access Points (AP) 23
Ethernet switch 23
TFTP (Trivial File Transfer Protocol) server 23
NTP (Network Time Protocol) server 24
Authentication server (if using WPA2 Enterprise) 24
Language 24
Licenses 24
Wi-Fi Multimedia 24
Wired Equivalent Privacy 24

Copyright © 2003-2010 Nortel Networks. All Rights Reserved.

Wi-Fi Protected Access 24
Wi-Fi Protected Access2 25
Virtual Private Network 25
Specifications 25
Handset Display 26
Startup sequence 28
Wireless telephone modes 29
Wireless telephone displays 31
Push-to-talk feature 31
Text-messaging feature 31
Feature programming 31
Loud noise environments 35
Quality of Service (QoS) 35
Security 36
System diagram 37
WLAN IP Telephony Manager 2245 38
WLAN Application Gateway 2246 39
Access Points 40
Handset switchover 40
Loss of signal 41

Planning **43**
Challenges of integrating voice applications 44
High overhead of 802.11 44
Rate scaling and variable capacity 44
Power adjustments and variable capacity 45
Quality of Service 45
DHCP server planning 46
TFTP Server planning 48
Syslog Server planning 50
Access point planning 50
Site survey 51
Effective site survey 53
Example of AP placement 55
Solving coverage issues 56
Solving overlap issues 56
Network planning 58
Network recommendation 58
Sample Access Control List 58
Network management 58
Assessment through a WLAN site survey 59
Assessment using NetIQ Vivinet Assessor 60
Monitoring and reporting with Enterprise Network Monitoring System 61
Monitoring and reporting with Communication Server 1000 Telephony

Copyright © 2003-2010 Nortel Networks. All Rights Reserved.

Manager 63
Monitoring and reporting with NetiQ Vivinet Assessor, Vivinet AppManager, and Vivinet Diagnostics 64
Communication Server 1000 Telephony Manager 65
Zones 65
Other network design considerations 66
Access Point interference 67
SSID options and limitations 68
Layer 3 implementation 69
WLAN IP Telephony Manager 2245 planning 70
Installation requirements 70
Capacities 71
WLAN IP Telephony Manager 2245 groups 71
Gateway and timing function 75
Roaming and handover 76
Multicast 77
Placement guidelines for the WLAN IP Telephony Manager 2245 77
WLAN Application Gateway 2246 planning 84
WLAN IP Telephony Manager 2245 and WLAN Application Gateway 2246 installation requirements 85
IP address planning 85
IP addressing with DHCP 86
Planning worksheets 86

System information **89**
Bandwidth management 89
Zones 89
Zones for wireless handsets 90
Call blocking 91
Codecs 92
Jitter buffer 92
RLR and SLR 92
RTCP 93
Gain adjustment 93
Programmable rings and tones 93
In/Out of Service tones 93
Virtual Office 93
Branch Office 93
Local mode display 93
Survivable Remote Gateway 94
External Applications Server 95
End-to-end QoS 95
NAT 95
NAT Traversal feature 96

Copyright © 2003-2010 Nortel Networks. All Rights Reserved.

Network configurations 96
WLAN IP Telephony Manager 2245 in a NAT environment 100
DHCP Server location in a NAT environment 100
TFTP Server location in a NAT environment 101
WLAN Application Gateway 2246 in a NAT environment 101
Communication Server 1000 features 102
IP Phone 2004 features 102

Installation 105
Required materials 105
Supplied equipment 106
Preinstallation checklist 106
WLAN IP Telephony Manager 2245 installation tasks 106
About the front panel 106
Wall-mount 107
Rack-mount 108
LAN connection 109
Power connection 109
WLAN Application Gateway 2246 installation 109

WLAN Handset 6120/6140 Configuration 111
Administration menu 111
Opening the Administration menu 115
Navigation 115
Toggle options 115
Data entry and editing 116
Language 116
Telephony Protocol 116
Push-to-talk 116
Time zone 117
Daylight Savings 117
Protected speed-dial 117
Password (Disable/Enable) and Change Password 117
Set Terminal Type 118
Startup Keylock 118
Speakerphone 118
OAI (Disable/Enable) 118
IP addresses 119
SSID 120
Security 120
Regulatory domain, 802.11 configuration, and transmit power 122
Run Site Survey 123
Diagnostics Mode 123
Syslog Mode 124
Error Handling Mode 124

Copyright © 2003-2010 Nortel Networks. All Rights Reserved.

Restore Defaults 124
Configuration menu 125
Lock keys 127
User profiles 127
Phone Settings 130
Push-to-Talk 131
System Info 131
Extension 132
User Name 132

WLAN IP Telephony Manager 2245 configuration 133
Introduction 133
Functional description 134
Configuration tasks 136
Connecting the APs 136
Connect to the WLAN IP Telephony Manager 2245 137
Serial port connection 137
Telnet connection 138
Configure the network 139
Save the configuration 141
Changing the master IP address 141
Radio Settings 142
QoS Configuration 142
Configure the WLAN IP Telephony Manager 2245 144
Change the password 146
Common Parameters 148
Configure Communication through the Web Server 148
Configure VLAN, Ports and Security 148
Configure Radio Profile 150
Configure Service Profile 151
Configure APs 154
Configure RADIUS Server Example(WPA2-Enterprise Only) 154
Configure QoS 154
Configure Subnet Roaming 155

Administration and maintenance 157
Adding a WLAN IP Telephony Manager 2245 to the system 157
Checking in to the Gateway 157
WLAN IP Telephony Manager 2245 failure 158
Replacing a WLAN IP Telephony Manager 2245 158
Failed master WLAN IP Telephony Manager 2245 158
Replacing the failed WLAN IP Telephony Manager 2245 159
Removing a WLAN IP Telephony Manager 2245 from the system 159
Wireless handset scenarios 160
Changing the master WLAN IP Telephony Manager 2245 160

Copyright © 2003-2010 Nortel Networks. All Rights Reserved.

View software version 160
For the WLAN IP Telephony Manager 2245 160
For the WLAN Application Gateway 2246 161
For a wireless handset 161
Software updates 161
Update software on the WLAN IP Telephony Manager 2245 161
Update software on the WLAN Application Gateway 2246 162
Update software on a wireless handset 162
Software update (version 97.0701) for the WLAN Handsets 2210/2211/2212 163
Displays 164
Wireless handset download messages 164
Normal download messages 164
Download failure or recovery messages 164

Troubleshooting 167
Troubleshooting the WLAN IP Telephony Manager 2245 167
Error Status screen 168
Network Status screen 168
Software Version Numbers screen 170
Speed or duplex mismatch 170
Troubleshooting the WLAN Application Gateway 2246 170
Troubleshooting the handset 171
Context 171
Access Point problems 171
Configuration problems 172
Duplex mismatch 172
No ring 172
Far-end echo 172
Dropped calls 173
Wireless handset status messages 173
Using Call Server overlay commands 188
TPS CLI commands 190
Determining alias IP addresses 193
Troubleshooting coverage issues 193
Before calling Nortel Technical Support 193

WLAN Application Gateway 2246 195
Introduction 195
System overview 196
Front panel 197
Third-party applications 198
Nurse-call systems 199
Installation 199
Configuring the WLAN Application Gateway 2246 IP address 200

Copyright © 2003-2010 Nortel Networks. All Rights Reserved.

Configuration 201
Administration console navigation 201
Task summary list 202
Configuring the OAI Box 203
Configuring network parameters 203
Connecting to the Application Server 205
Continuing configuration through Telnet 207
Connecting through Telnet 207
Configuring the Telephone Line 208
Deleting a handset 209
Searching for a handset 210
Feature programming 211
Setting or changing a password 211
System status 212
Network status 213
Software versions 214
Telephone line status 214
Certification testing 215
WLAN Application Gateway 2246 certification 215
Wireless handset certification 215
Software 215
Software updates 216
TFTP software updates Systems 217
Planning Worksheet for Handsets 218
Free the serial port for administrative purposes 219

Troubleshooting WLAN IP Telephony installations 221
Site data-gathering tables 221
Product-specific configuration 223
Terminal proxy server 223
Handsets 224
WLAN IP Telephony Manager 2245 224
Quality of Service 224
WLAN specific configuration 225
Nortel switches 225
Cisco access points and switches 225
General WLAN configuration 230
DHCP server options 231
DHCP options 232
DHCP support for handsets that emulate the IP Phone 2004 234
Format of the IP Phone 2004 Terminal DHCP Class Identifier field 234
Format of the IP Phone 2004 Terminal DHCP Encapsulated Vendor Specific option 235
Format of the IP Phone 2004 Terminal DHCP Site Specific option 236

Copyright © 2003-2010 Nortel Networks. All Rights Reserved.

Quality of Service checklist for voice over WLAN applications 238
RF basics and AP configuration 240
Troubleshooting 243
Diagnosis flows 243
Handset error messages 245
Timing information 246
Diagnostic Tools 247
Run Site Survey for the WLAN Handset 2210/2211/2212 247
Run Site Survey for the WLAN Handset 6120/6140 249
Diagnostics Mode 251
Syslog Mode 254
Data capture 260
Questions 260
Data checklist 260
Site-data required for the capture analysis 261
Syslog capture configuration 262
Signaling Server log capture 263
General data capture 263
Capture assert error messages with the Configuration Cradle 265
Network speech levels 266
Reference documents 266

Compatible Access Points 269

Copyright © 2003-2010 Nortel Networks. All Rights Reserved.

New in this release

There have been no updates to the feature descriptions in this document for Communication Server 1000 Release 7.0.

Other changes

Revision history

June 2010	Standard 05.01. This document is up-issued to support Communication Server 1000 Release 7.0.
June 2009	Standard 04.02. This document is up-issued to support Communication Server 1000 Release 6.0. This document contains an update to technical content for the WLAN Handset 6120/6140.
May 2009	Standard 04.01. This document is up-issued to support Communication Server 1000 Release 6.0.
September 2008	Standard 03.04. This document is up-issued to support Communication Server 1000 Release 5.5. This document contains an update to technical content for WLAN IP Telephony Manager 2245.
September 2008	Standard 03.03. This document is up-issued to support Communication Server 1000 Release 5.5. This document contains an update to technical content.
February 2008	Standard 03.02. This document is up-issued to support Communication Server 1000 Release 5.5. This document contains an update to technical content.
February 2008	Standard 02.02. This document is up-issued to support Communication Server 1000 Release 5.0. This document contains an update to technical content.
December 2007	Standard 03.01. This document is up-issued to support Communication Server 1000 Release 5.5.
December 2007	Standard 02.01. This document is up-issued to support Communication Server 1000 Release 5.0. This document includes updated content based on a maintenance release for Nortel WLAN Handset 2210/2211/2212 hardware and Nortel WLAN Telephony Manager 2245.

Copyright © 2003-2010 Nortel Networks. All Rights Reserved.

June 2007	Standard 01.02. This document is up-issued to reflect a change in the revision history.
May 2007	Standard 01.01. This document is issued to support Nortel Communication Server 1000 Release 5.0. This document contains information previously contained in the following legacy document, now retired: *WLAN IP Telephony Installation and Configuration (553-3001-304)*.
August 2005	Standard 4.00. This document is up-issued to support Nortel Communication Server 1000 Release 4.5.
September 2004	Standard 3.00. This document is up-issued to support Nortel Networks Communication Server 1000 Release 4.0.
June 2004	Standard 2.00. This document is up-issued to reflect changes in technical content.
May 2004	Standard 1.00. This document is issued to support the Nortel Networks WLAN system, including the Nortel Networks WLAN IP Telephony Manager 2245, Nortel Networks WLAN Application Gateway 2246, Nortel Networks WLAN Handset 2210, and Nortel Networks WLAN Handset 2211.

Copyright © 2003-2010 Nortel Networks. All Rights Reserved.

How to get help

This chapter explains how to get help for Nortel products and services.

Getting help from the Nortel Web site

The best way to get technical support for Nortel products is from the Nortel Technical Support Web site:

www.nortel.com/support

This site provides access to software, documentation, bulletins, and tools to address issues with Nortel products. From this site, you can:

- download software, documentation, and product bulletins
- search the Technical Support Web site and the Nortel Knowledge Base for answers to technical issues
- arrange for automatic notification of new software and documentation for Nortel equipment
- open and manage technical support cases

Getting help over the phone from a Nortel Solutions Center

If you do not find the information you require on the Nortel Technical Support Web site, and you have a Nortel support contract, you can also get help over the telephone from a Nortel Solutions Center.

In North America, call 1-800-4NORTEL (1-800-466-7835).

Outside North America, go to the following Web site to obtain the telephone number for your region:

www.nortel.com/callus

Copyright © 2003-2010 Nortel Networks. All Rights Reserved.

Getting help from a specialist by using an Express Routing Code

To access some Nortel Technical Solutions Centers, you can use an Express Routing Code (ERC) to quickly route your call to a specialist in your Nortel product or service. To locate the current ERC for your product or service, go to:

www.nortel.com/erc

Getting help through a Nortel distributor or reseller

If you purchased a service contract for your Nortel product from a distributor or authorized reseller, contact the technical support staff for that distributor or reseller.

Copyright © 2003-2010 Nortel Networks. All Rights Reserved.

Overview

This chapter contains information about the following topics:

- "Subject" (page 15)
- "Resources" (page 16)
- "Declaration of conformity" (page 16)
- "Shielded cable" (page 17)
- "Wireless telephone network description" (page 17)
- "Call Server" (page 19)
- "DHCP Server" (page 20)
- "TFTP Server" (page 20)
- "Firewall" (page 20)
- "WLAN Handset 2210/2211/2212 and WLAN Handset 6120/6140" (page 20)
- "WLAN IP Telephony Manager 2245" (page 38)
- "WLAN Application Gateway 2246" (page 39)
- "Access Points" (page 40)
- "Handset switchover" (page 40)

Subject

This document describes the planning, installation, configuration, maintenance, and troubleshooting for the Nortel WLAN system, including the following elements:

- Nortel WLAN IP Telephony Manager 2245
- Nortel WLAN Application Gateway 2246 (optional)
- Nortel WLAN Handset 2210
- Nortel WLAN Handset 2211

Copyright © 2003-2010 Nortel Networks. All Rights Reserved.

- Nortel WLAN Handset 2212
- Nortel WLAN Handset 6120
- Nortel WLAN Handset 6140

Resources

This section lists information sources that relate to this document.

- *WLAN Handset 2210 User Guide (NN10300-077)*
- *WLAN Handset 2211 User Guide (NN10300-078)*
- *WLAN Handset 2212 User Guide (NN10300-071)*
- *WLAN Handset 6120 User Guide (NN43150-100)*
- *Features and Services Fundamentals (NN43001-106)*
- *Main Office Configuration Guide for Survivable Remote Gateway 50 (NN43001-307)*
- *Branch Office Installation and Commissioning (NN43001-314)*
- *IP Line Fundamentals (NN43001-500)*
- *WLAN Handsets Fundamentals (NN43001-505)*

Online

To access Nortel documentation online, click the **Technical Documentation** link under **Support & Training** on the Nortel home page:

www.nortel.com

CD-ROM

To obtain Nortel documentation on CD-ROM, contact your Nortel customer representative.

Declaration of conformity

The WLAN IP Telephony Manager 2245 and WLAN Application Gateway 2246 have been found to comply with the following:

- FCC Part 15 Class A - Radiate and Conducted Emissions requirements
- CISPR 22 Class A - Radiate and Conducted Emissions requirements
- ICES 003 Class A - Radiate and Conducted Emissions requirements
- EN 55022 Class A - Radiated and Conducted Emissions requirements
- EN 55024 Immunity Requirements

Copyright © 2003-2010 Nortel Networks. All Rights Reserved.

- EN 61000-3-2 Harmonic Current Emissions
- EN 61000-3-3 Flicker Emissions



WARNING
Changes or modifications to this equipment not approved by Nortel can cause this equipment to not comply with part 15 of the FCC rules and void the user's authority to operate this equipment.



WARNING
This equipment contains no user-serviceable parts inside. Refer servicing to qualified service personnel.

ATTENTION
FCC CFT 47 Part 15.21 statement:
"Note: This equipment has been tested and found to comply with the limits for a Class A digital device, pursuant to part 15 of the FCC rules. These limits are designed to provide reasonable protection against harmful interference when the equipment is operated in a commercial environment. This equipment generates, uses, and can radiate radio frequency energy and, if not installed and used in accordance with the instruction manual, may cause harmful interference to radio communications. Operation of this equipment in a residential area is likely to cause harmful interference in which case the user will be required to correct the interference at his own expense."

ATTENTION
EN 55022/SICPR22 statement:
"Warning

This is a class A product. In a domestic environment this product may cause radio interference in which case the user may be required to take adequate measures".

Shielded cable

Nortel recommends the use of shielded cable for all external signal connections in order to maintain FCC Part 15 emissions requirements.

Wireless telephone network description

The Nortel WLAN wireless telephone network consists of the following components:

- Call Server
- DHCP server
- Trivial File Transfer Protocol (TFTP) server
- Firewall

Copyright © 2003-2010 Nortel Networks. All Rights Reserved.

- Nortel WLAN Handset 2210/2211/2212, and Nortel WLAN Handset 6120/6140
- Nortel WLAN IP Telephony Manager 2245
- Nortel WLAN Application Gateway 2246 (optional)
- Access Point (AP)—one or more as required by the site

Figure 1 "Typical wireless telephone network configuration" (page 19) shows a typical wireless telephone network configuration. The three different lines indicate the following:

- Red—signalling
- Blue dashed—wireless to wireless audio
- Blue solid—wireless to wired audio

Copyright © 2003-2010 Nortel Networks. All Rights Reserved.

Figure 1
Typical wireless telephone network configuration

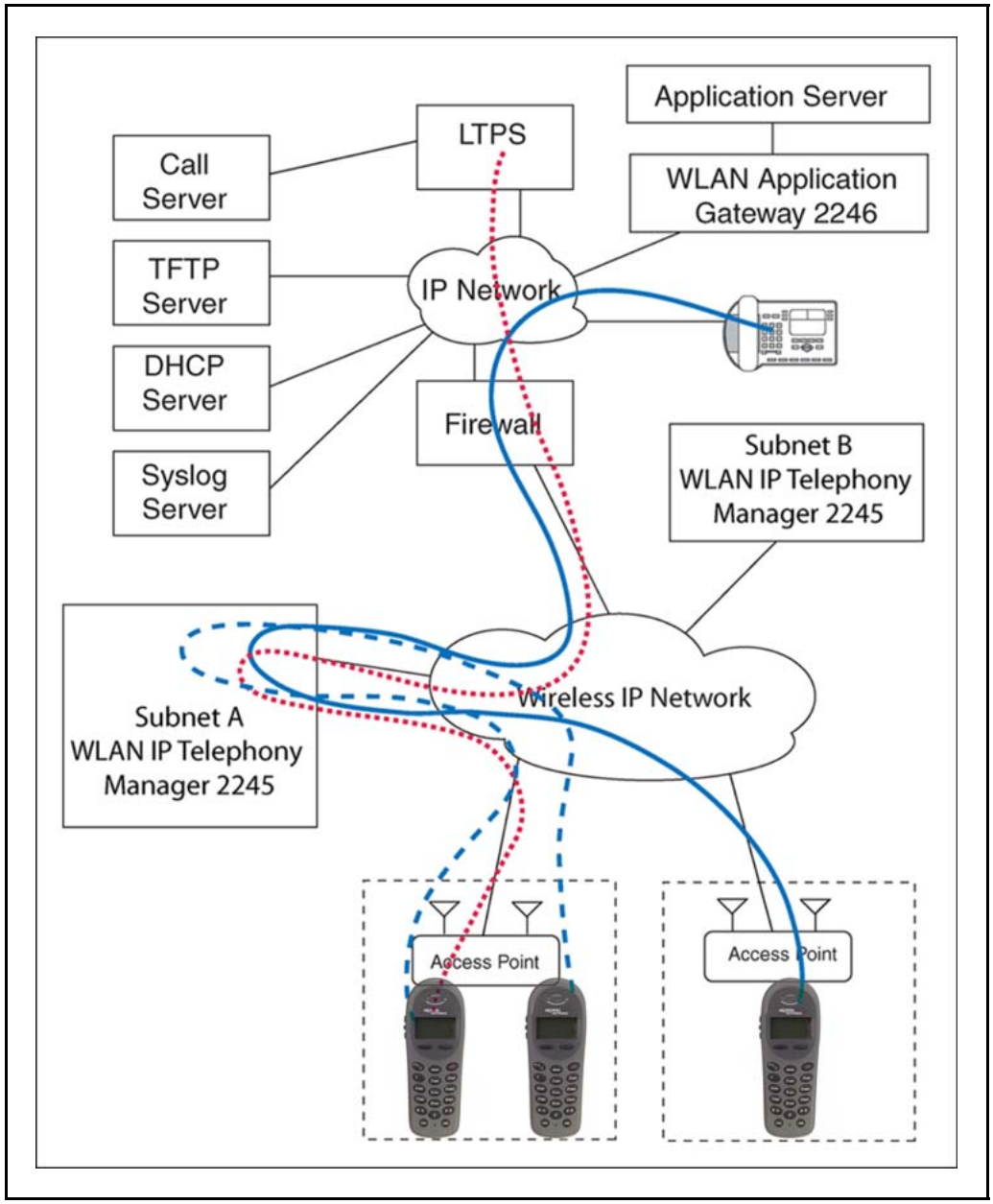

Call Server

The Call Server can be the Call Server of any Nortel Communication Server (CS) 1000 system running Communication Server 1000 Release 4.5 or later software for WLAN Handset 6120/6140 and or Succession 3.0 or later for WLAN Handset 2210/2211/2212.

Copyright © 2003-2010 Nortel Networks. All Rights Reserved.

DHCP Server

The existing DHCP Server can be on either side of the firewall, according to the site administrator's preference. The DHCP server is optional if the wireless handsets and WLAN IP Telephony Manager 2245 are statically configured.

DHCP options

If you use a DHCP Server, configure the following options:

- DHCP Option 3—the Default Gateway
- DHCP Option 7—the Syslog Server
- DHCP Option 42—the Time Server
- DHCP Option 60—the Class Identifier
- DHCP Option 66—the IP address of the TFTP Server
- DHCP Option 151—the IP address of the WLAN IP Telephony Manager 2245
- DHCP Option 152—the IP address for the optional WLAN Application Gateway 2246

For more information, see "DHCP server options" (page 231).

TFTP Server

A TFTP Server is required in an IP Telephony system to distribute software to the wireless handsets and WLAN IP Telephony Manager 2245. It can reside on a different subnet than the Call Server and APs. The TFTP Server can be located on either side of the firewall.

Firewall

The firewall is an optional element that is often used to separate the wireless and wired domains.

WLAN Handset 2210/2211/2212 and WLAN Handset 6120/6140

The WLAN Handset 2210/2211/2212 and WLAN Handset 6120/6140 uses Voice over IP (VoIP) technology on IEEE 802.11-compliant Wireless Local Area Networks (WLANs). Access points (AP) use radio frequencies to transmit signals to and from the wireless handsets.

ATTENTION
In this document, handsets means the WLAN Handset 2210/2211/2212 and WLAN Handset 6120/6140. Where the feature refers only to a specific handset, the full handset name is used.

Copyright © 2003-2010 Nortel Networks. All Rights Reserved.

Employees carry wireless handsets to make and receive calls as they move throughout the building. The handsets are used only on the premises; they are not cellular phones. The handsets communicate with the Communication Server 1000 and with the WLAN IP Telephony Manager 2245. Just like wired telephones, the wireless handsets receive calls directly, receive transferred calls, transfer calls to other extensions, and make outside and long-distance calls (subject to corporate restrictions).

The handsets interoperate with other IP Line and IP Trunk features and devices, such as IP Peer, and the IP Phone 20xx and IP Softphone 2050 series of IP Phones, with the exception of some media-related constraints described in “Codecs” (page 92).

The frequencies that are allocated are governed by IEEE guidelines for WLANs and are part of the free spectrum. The WLAN Handset 6120/6140 uses a, b, and g frequencies, and the WLAN Handset 2210/2211/2212 uses the b frequency.

The handsets work only in a Nortel Succession 3.0 (and later) environment coordinated with a Communication Server (CS) 1000 or Business Communications Server (BCM). These handsets communicate with the Nortel call server through the Unified Network IP Stimulus (UNIStim) protocol. The media path of the voice call goes from the handset directly to the destination device (through the WLAN Telephony Manager 2245). In addition, the handset encapsulates all traffic in the SpectraLink Voice Priority (SVP) protocol. The WLAN Telephony Manager 2245 deencapsulates the VoIP traffic from SVP and passes it onto the network—it does not translate between UNIStim and SVP. Therefore, the Telephony Manager 2245 is in the path of all communication to and from the handset. Likewise, signaling goes from the handset to the Telephony Manager 2245 to the call server.

The WLAN Handset 2211 and the WLAN Handset 6140 are the most durable and they are the only handsets that support Push-to-talk (PTT).

For more information about the handsets, see the following publications:

- *WLAN Handset 2210 User Guide (NN10300-077)*
- *WLAN Handset 2211 User Guide (NN10300-078)*
- *WLAN Handset 2212 User Guide (NN10300-071)*
- *WLAN Handset 6120 User Guide (NN43150-100)*
- *WLAN Handsets Fundamentals (NN43001-505)*

Copyright © 2003-2010 Nortel Networks. All Rights Reserved.

Components

The WLAN Handset Series 2200 offers the following components for local configuration:

- Nortel WLAN Handset 2200 Series Configuration Cradle Software—software only
- Nortel WLAN Handset 2200 Series Configuration Cradle—required hardware (serial cable included)

The WLAN Handset 6100 Series offers the following components for local configuration:

- Nortel WLAN Handset 6100 Series Administration Tool Software—software only
- Nortel WLAN Handset 6100 Series Dual Slot Handset Charger—required hardware (USB cable not included)
- USB Cable for the Nortel WLAN Handset 6100 Series Dual Slot Handset Charger

For more information about this tool for the WLAN Handset 6120/6140, including personal computer requirements, how to install the USB driver, and how to install and use the software, see *WLAN Handsets Fundamentals (NN43001-505).*

ATTENTION

For the purposes of this document

- Configuration Cradle refers to the Nortel WLAN Handset 2200 Series Configuration Cradle.
- Handset Administration Tool refers to the Nortel WLAN Handset 6100 Series Administration Tool Software.
- Dual Slot Handset Charger or Handset Charger refers to the Nortel WLAN Handset 6100 Series Dual Slot Handset Charger.

WLAN IP Telephony Manager 2245 (used with SpectraLink Voice Priority QoS method)

As described in “Quality of Service (QoS)” (page 35), the WLAN IP Telephony Manager 2245 is a wired LAN device that the SpectraLink Voice Priority for QoS requires (not required when WMM is enable for 6100 series phones).

Nortel VoIP System

The handset operates as a wireless extension of the Nortel BCM, Meridian 1, and Succession 1000 call server, using the UNIStim voice protocol.

Copyright © 2003-2010 Nortel Networks. All Rights Reserved.

WiFi Access Points (AP)

Enterprise-grade WiFi access points provide the connection between the wired LAN and the wireless LAN. You must position the 802.11a/b/g/n APs in all areas where you will use the Wireless telephones to ensure seamless radio coverage. The number, type, and placement of access points affects the coverage area and capacity of the wireless system. Careful planning of the WLAN is necessary to ensure good voice quality. For more information, see *Best Practices Guide for Deploying WLAN Handset 6120/6140 Wireless Telephones* .

Access points can be used SpectraLink Voice Priority (SVP) in conjunction with an WLAN IP Telephony Manager 2245, CCXv4 (Cisco APs only) or WiFi Standard QoS (including WMM, WMM-Power Save, and WMM-Admission Control).

Note: You must properly configure APs to support the corresponding QoS and security methods selected for the handset.

Ethernet switch

One or more Ethernet switches interconnect multiple wired devices, including the WLAN IP Telephony Manager 2245 (if used for QoS), the Nortel IP telephony system, Nortel IP phones, TFTP Server, RADIUS authentication server, and WLAN access points. Enterprise Ethernet switches provide the highest performance networks, which can handle combined voice and data traffic, and requires using the Wireless telephones.

Although Nortel recommends a single Ethernet switch network the Wireless telephones and the WLAN IP Telephony Manager 2245 can operate in larger, more complex networks, including networks with multiple Ethernet switches, routers, VLANs, and multiple subnets, as long as the WLAN IP Telephony Manager 2245 and handsets are on the same subnet. However, in such networks, it is possible for the quality of service (QoS) features of the WLAN IP Telephony Manager 2245 to be compromised, and consequently voice quality can suffer. Networks that consist of more than a single Ethernet switch must be thoroughly tested to ensure all quality issues are addressed. For more information, see *Best Practices Guide for Deploying WLAN Handset 6120/6140 Wireless Telephones*.

TFTP (Trivial File Transfer Protocol) server

A TFTP server requires the system to distribute software to the Wireless Telephones and WLAN IP Telephony Manager 2245. It can be on a different subnet than the supported Nortel IP telephony devices and APs.

Copyright © 2003-2010 Nortel Networks. All Rights Reserved.

NTP (Network Time Protocol) server

If you use WPA Enterprise security , the handset validates the PEAP certificate has a valid date and time with the NTP Server on the network, if one is available. If an NTP Server is not available, the certificate is deemed valid and operate accordingly.

Authentication server (if using WPA2 Enterprise)

You must use a RADIUS authentication server to provide user name or password based authentication using RSA certificates for PEAPv0/MSCHAPv2 or PAC files for EAP-FAST.

Language

The handset menus and screens that originate from the Call Server are displayed in the languages supported on the Call Server. The administration and configuration menus, and all other local handset prompts are English-only.

Licenses

The handset appears to the Call Server as a standard IP Phone 2004. Therefore, each wireless handset requires one IP User License and is subject to the same feature packaging requirements as the existing IP Phone 2004.

Wi-Fi Multimedia

The handsets support basic Wi-Fi Multimedia (WMM) to improve Quality of Service (QoS), as defined in the 802.11e specification. WMM provides prioritized QoS capability when concurrent applications, each with unique latency requirements, are competing for network resources.

When WMM is used, all voice traffic originating from the wireless handset is assigned the WMM Voice Access Category, making it the highest priority application. If the wireless network supports WMM, the handsets enable WMM support automatically; otherwise, SpectraLink Voice Prioritization (SVP) is used.

Wired Equivalent Privacy

The handsets support Wired Equivalent Privacy (WEP) as defined by the 802.11a, b, and g specification. Nortel offers the product with both 40-bit and 128-bit encryption. WEP increases the security of the wireless LAN to a level similar to a wired Ethernet LAN.

Wi-Fi Protected Access

The handsets support Wi-Fi Protected Access (WPA) using preshared key (PSK), as defined by the 802.11i specification. WPA increases the security of the wireless LAN, using key encryption, key rotation, authentication and message integrity checking.

Copyright © 2003-2010 Nortel Networks. All Rights Reserved.

Wi-Fi Protected Access2

The handsets support Wi-Fi Protected Access2 (WPA2) using preshared key (PSK) and Advanced Encryption Standard (AES), as defined by the 802.11i specification. WPA2 increases the security of the wireless LAN, using key encryption, key rotation, data encryption, authentication, and message integrity checking.

Virtual Private Network

The WLAN Handset 2212 supports Virtual Private Network (VPN) security. VPN security provides a secure tunnel for the transfer of unencrypted information. A two-phase approach is used to negotiate the tunnel, with Phase 1 protecting Phase 2. Phase 1 uses preshared keys, Diffie-Hellman group, hashing, and encryption. Phase 2 uses hashing and encryption. Both phases have limited, configurable lifetimes.

Specifications

Table 1
WLAN Handset 6120/6140 specifications

Radio frequency (selectable)	(802.11b, 802.11g) (802.11a)	2.4-2.48385 GHz
Transmission type	Direct-sequence spread spectrum (DSSS)	
Transmit data rate	Up to 54 Mb/s (802.11a/g), up to 11 Mb/s (802.11b)	
WLAN QoS	SpectraLink Voice Priority (SVP)	
	WiFi Standard QoS (using WMM, WMM-Power Save, and WMM-Admission Control)	
	CCXv4	
WLAN security	WEP (Wired Equivalent Privacy)	
	Cisco FSR (Fast Secure Roaming)	
	WPA Personal	
	WPA2 Personal	
	WPA2 Enterprise • 802.1X Authentication — EAP-FAST — PEAPv0/MSCHAPv2 – PEAP certificate sizes: 512, 1024, 2048, 4096 bit – Encryption Ciphers: AES, RSA, RC4 – Data Integrity: Hashed Message – Authentication Code MD5 (HMAC-MD5) (RFC 2403, 2104) and Secure Hash	

Copyright © 2003-2010 Nortel Networks. All Rights Reserved.

Table 1
WLAN Handset 6120/6140 specifications (cont'd.)

	Algorithm-1 SHA (HMAC-SHA-1) (RFC2404) • Fast AP Handoff — Opportunistic Key Caching (OKC) — Cisco Client Key Management (CCKM)
FCC certification	Part 15.247
Other certifications	IP 53 certified for resistance to dust and liquid resistance
	MIL 810F Proc IV 516.5 for shock resistance
	Cisco Client Extensions (CCX) v4
Voice encoding	G.711, G.729a/ab
VoIP Protocols	UNISTIM
Transmit power	Up to 100mW Transmit Power Control (formerly 802.11h), for more information see Appendix A.
Display	LCD. Up to five lines of text plus two icon status rows and one row for softkey labels.
8020 Dimensions	5.4 in. x 2.0 in. x 0.9 in. (13.7 x 5.1 x 2.3 cm)
8030 Dimensions	5.7 in. x 2.0 in. x 0.9 in. (14.5 x 5.1 x 2.3 cm)
8020 Weight*	3.9 oz. (110.6 g) with Standard Battery Pack
8030 Weight*	4.2 oz. (119.1 g) with Standard Battery Pack
Standard Battery Pack capacity	4 hours talk, 80 hours standby
Extended Battery Pack capacity	6 hours talk, 120 hours standby
Ultra-Extended Battery Pack capacity	8 hours talk, 160 hours standby

Handset Display

When the Wireless Telephone is off-hook, the Nortel call server provides display information . The handset displays the first 18 characters of each line of text provided. Certain characters supported by the Nortel call server are not implemented in the Wireless telephone, such as definable and special characters.

Copyright © 2003-2010 Nortel Networks. All Rights Reserved.

Table 2
WLAN Handset 6120/6140 display information

Indicator	Function
	The signal-strength icon indicates the strength of the signal and can assist the user in determining if the handset is moving out-of-range.
	The voice mail icon is activated when a new voice mail message is received if the feature is supported by the phone emulation.
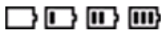	The battery icon indicates the amount of charge remaining in the Battery Pack. When only one level remains, you must change the Battery Pack.
	The speakerphone icon appears when the speakerphone is active.
	The line indicators are associated with telephone line status and access.
	Up and down arrows appear when the menu has additional options above or below. Left or right arrows appears during editing when you can move the cursor left or right.
	PBX ring icon. A regular telephone call is coming in.
	OAI ring icon. A call is coming in from the OAI application.
	The Push-to-talk (PTT) ring icon. A PTT call is coming in.
	The priority PTT ring icon. A call is coming in on the priority PTT channel. This call overrides all others.

Copyright © 2003-2010 Nortel Networks. All Rights Reserved.

Table 2
WLAN Handset 6120/6140 display information (cont'd.)

Indicator	Function
	The Ekahau Real-Time Location System (RTLS) is enabled.
Muted	The muted indicator appears after you press the Mute softkey. It indicates that the microphone is not transmitting sound. Press the Mute softkey again to unmute the microphone.
Locked	Locked indicates that the keypad is locked to prevent accidental activation. Use the Unlk softkey plus the # key to unlock it.
[No Service message]	If you do not disable the warning tones, an alarm sounds and a descriptive message displays when the handset cannot receive or place calls. You are outside of the covered area. Walk back into the covered area. The in-service tone indicates that service is reestablished.
	The download icon indicates that the handset is downloading code. This icon only appears while the handset is running the over-the-air downloader. It appears to the right of the Signal Strength icon in the same location as the voice mail icon.
	The download failure icon indicates that the handset has failed to download code because the code is incompatible with the handset hardware. The system also creates a system log with the message: "Download aborted, code incompatible". When this icon appears, the handset code in the TFTP server must be updated.

Startup sequence

The Wireless telephone goes through an initialization sequence at startup. The line icons 1 to 9 appear and count down as the handset cycles through this sequence. If there is a problem at a step that prevents initialization from continuing, an error message will appears and the related icons will stay on. For more information about how to handle error messages that occur during initialization, see "Handset error messages" (page 245).

Copyright © 2003-2010 Nortel Networks. All Rights Reserved.

Table 3
WLAN Handset 6120/6140 startup sequence

Icon	The icons shown in bold turn off when one of the following occurs:
123 5678**9**	The Wireless telephone has located, authenticated, and associated with an AP, and is proceeding to higher-layer networking functions. ***Note:*** 4 is not used for the UNIStim protocol6 is not used when QoS is set to WiFi Standard
123 567**8**	The Wireless telephone is either configured for Static IP, or if configured for DHCP, the DHCP discovery process has started.
123 56**7**	If DHCP is configured, a DHCP response si received that contains a good DNS server configuration.
123 5**6**	***Note:*** Used for SVP QoS only and not present when using WiFi Standard QoS. Indicates one of the following possibilities: • Static IP configuration • WLAN IP Telephony Manager 2245 address found in DHCP option 151 response • WLAN IP Telephony Manager 2245 address found through DNS lookup
123 **5**	All networking functions are complete (notably, DHCP) and the Wireless Telephone is proceeding with establishing the SRP link to either the Gateway or WLAN IP Telephony Manager 2245.
12**3**	The UNIStim application has started.
1**2**	At least one IP address for a PBX (DHCP Option 128) is identified.
1	The Wireless Telephone successfully registers with the PBX.
Ext. XXXXX	Initialization is complete. The Wireless Telephone is in standby mode ready to receive and place calls.

ATTENTION
These prompts do not appear at every startup. They appear at first initialization and when certain conditions require them.

Wireless telephone modes

The following are wireless telephone modes.

Copyright © 2003-2010 Nortel Networks. All Rights Reserved.

Standby (on-hook)

In standby mode the Wireless telephone waits for an incoming call or for the user to place an outgoing call. The extension number appears on the display, and there is no dial tone. In this mode, the handset is conserving battery power and wireless LAN bandwidth.

When an incoming call occurs the handset rings until you answer the call by pressing the Start key, or the End key to silence the ringing.

Active (off-hook)

To place or receive a call, press the Start key. This transitions the Wireless telephone to active off-hook mode. When there is a dial tone, the handset is in communication with the PBX, and the display shows information as it is received from the PBX. The user can place a call, or press a softkey or the Fcn or Line key to access additional operations.

When an incoming call occurs during an active call the handset plays the second call ringing sound in the earpiece until you answer the call by pressing the Start key, the caller hangs up, or the call transfers to voice mail. If you press End, the first call terminates and the handset reverts to a full ring.

The active mode uses the most bandwidth and battery power. To conserve battery resources and allow the handset to receive new calls, return the Wireless Telephone to the standby mode when a call is completed by pressing the End key.

Active idle

Active idle occurs when the softkey display area is active but there is no dial tone. From the standby mode, press the Actv softkey to enter the active idle mode and display available softkeys.

Configuration menu mode

When user preferences are being configured in the Configuration menu, the handset is on but is not active. The handset cannot receive calls while in the Configuration menu.

ATTENTION

If the handset is idle 15 seconds while in the Configuration menu, it will return to the standby state. If a call was trying to be established while in the Configuration menu, it will ring as soon as it is returned to the standby state.

Messaging mode

If you program text messaging functions, such as with a nurse call system, the handset can receive text messages. While you access these messages, the handset is in Messaging mode. Incoming calls ring with the second call ringing sound.

Copyright © 2003-2010 Nortel Networks. All Rights Reserved.

Wireless telephone displays

The following sections describe the telephone displays.

Status display area

Call server information appears in the first two lines of text and available softkeys appear on the third line.

LINE display

There are six programmable keys that can be allocated to line appearances or features in several combinations. Pressing the Line key from the active mode displays the list of line appearances extracted from the programmable keys list. The line appearances are also mapped to corresponding line icons across the top of the Wireless telephone display.

FCN display

Pressing the Fcn key from the active mode displays the list of programmable keys that are not on the Line list. Open Application Interface features, if assigned, also appear with their shortcuts. The programmable key items that appear on this list each have a state indicator in the second column of the display that shows a plus sign if the associated feature is active. This second column is blank if the associated feature is not active. The plus sign emulates a lit or blinking LED on a Nortel IP telephone.

Push-to-talk feature

With the Push-to-talk (PTT) feature, the WLAN Handset 2211 and the WLAN Handset 6140 can operate in a PTT group-broadcast mode like a two-way radio, in addition to the standard telephone operation.

For more information, see *WLAN Handsets Fundamentals (NN43001-505)*.

Text-messaging feature

All WLAN handsets support text messaging applications through the WLAN Application Gateway 2246. The application server communicates to the WLAN Application Gateway 2246 through a proprietary Open Application Interface (OAI) messaging protocol. The WLAN Application Gateway 2246 forwards the messages to the WLAN IP Telephony Manager, which encapsulates the message for delivery to the handset.

If text-messaging functions are programmed, the handset can receive text messages. While you access text messages, the handset is in messaging mode. Incoming calls ring with the second call-ringing sound.

Feature programming

The button mapping from the Nortel i2004 Internet telephone to the Wireless Telephone was designed to preserve nearly all of the functionality of the i2004 Internet Telephone within a small, mobile device. All

Copyright © 2003-2010 Nortel Networks. All Rights Reserved.

telephone functions and messaging features are supported if possible. The FCN-labeled buttons bellow are hard-coded to key sequences on the Wireless Telephone. View the feature labels by pressing the Fcn button to display the Feature List.

Figure 2
Nortel i2004 Internet Telephone

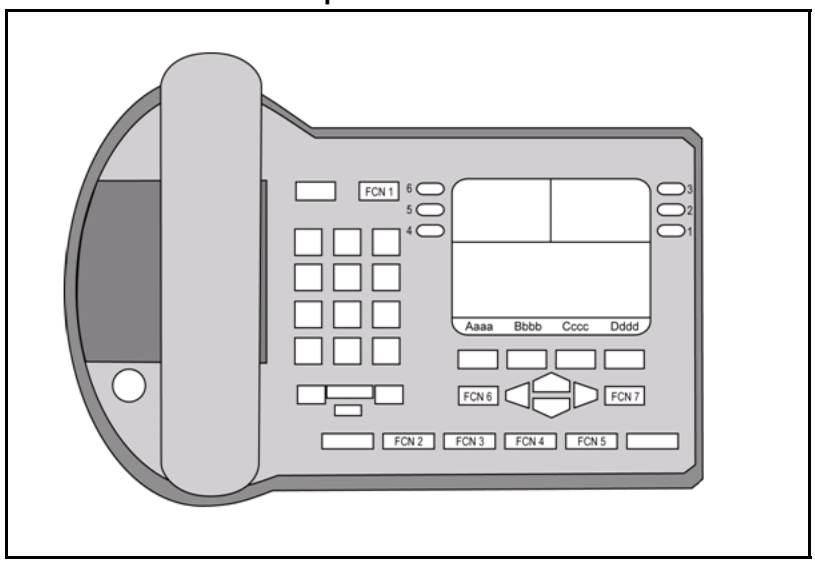

For the sake of clarity, when Line keys 1 to 6 in the above diagram have been programmed to lines, they are called *Line Appearances*. When these numbers are programmed to features, they are called *Line Features*. Both are activated on the Wireless Telephone through the Line key plus a number key.

Softkey Assignment

The following are descriptions of softkey assignments.

Standby mode-CS1000

In the Communication Server 1000, call server features include redial, speed-dial, and phonebook. These features are therefore disabled in the handset. You can access Communication Server 1000 features through the Directory Services option on the Feature List. Press Fcn to display the Feature List.

Active idle mode and Active mode (CS1000)

After you press the Actv softkey, the handset enters the active idle mode and the softkeys that are programmed from the PBX replace the standby mode softkeys. This enables you to access features while still on-hook. The active idle mode times out if no keys are pressed.

This same set of softkeys also appears when off-hook or in a call.

Copyright © 2003-2010 Nortel Networks. All Rights Reserved.

While in active idle or active mode, press Fcn to display the Feature List and softkeys that activate handset features.

Standby mode-BCM
With the BCM server, redial, speed-dial, and phonebook are available in the handset and appear in the second set of softkeys. Universal Serial Bus appears only when you configure the handset.

When more than four softkeys are available, < and > appear. Use Nav < and Nav > to toggle between sets.

Active idle mode (BCM)
From standby, press Actv to enter the active idle mode. The Ftre (Feature) softkey provides access to programmed BCM system features while off-hook. Press keypad numbers to activate features just as you would on the i2004 Internet telephone.

Active mode (BCM)
While in a call, press Fcn to display the Feature List and softkeys that activate handset features.

Feature assignment

The following table shows how the keys of the i2004 Internet telephone are mapped to key sequences on the Wireless Telephone.

Table 4
Feature assignments

I2004key	Feature	Wireless telephone key sequence	Display location
1	Line 1 (usually)	Line + 1	Line menu
2	Programmable	Line + 2	Line menu
3	Programmable	Line + 3	Line menu
4	Programmable	Line + 4	Line menu
5	Programmable	Line + 5	Line menu
6	Programmable	Line + 6	Line menu
Goodbye		FCN +	Feature list
Directory		FCN +	Feature list
Inbox		FCN +	Feature list
Outbox		FCN +	Feature list
Services		FCN +	Feature list
Quit		FCN +	Feature list

Copyright © 2003-2010 Nortel Networks. All Rights Reserved.

Table 4
Feature assignments (cont'd.)

I2004key	Feature	Wireless telephone key sequence	Display location
Copy		FCN +	Feature list
	[OIA]	FCN +	Feature list

ATTENTION
If an Open Application Interface (OAI) is operational, up to four function key sequences are assigned in the OAI configuration and override the function sequence established here. Use unassigned key sequences (For example, Fcn + 8, 9, #, *) for OAI access.

Programming memory keys in the Wireless Telephone

In certain IP environments, the end user can program Line keys 1 to 6. These keys can be programmed in the handset just like they are programmed in the i2004 Internet Telephone. Press Start and then press Fcn+1 (Goodbye). The Wireless Telephone is in the idle state where the softkey display area is active but there is no dial tone. The handset does not time out and revert to standby mode until the process is completed by the user. This is equivalent to the on-hook idle state of the i2004 Internet telephone. Follow the instructions provided with the i2004 Internet telephone for your IP system to program or to change the programming for the Line 1 to 6 keys.

Feature Access

The following are descriptions of the features you can access.

Softkeys

Some features can be accessed and activated by pressing a softkey. Examples are Hold, Mute, Park, and Conference. Others are only available through the Line Menu or the Feature List.

Line Menu

While off-hook, press the Line key to view the key labels for line appearances and line features. This list is updated whenever the PBX updates the programmable key labels. To activate a line or a line feature, press the corresponding number key. Use the Nav buttons to scroll and select, use the Line button to page between screens. Press the End key or the Cncl softkey to exit the Line menu.

Feature List

The i2004 Internet Telephone has several fixed feature keys. The [Communication Server 1000 and BCM] implementation supports the features that are suitable to a mobile user through the Function (Fcn) key

Copyright © 2003-2010 Nortel Networks. All Rights Reserved.

on the Wireless Telephone. When Fcn is pressed, the display lists the features and the assigned key. Press the End key or the Exit softkey to exit the list.

Activate the fixed features on the off-hook Wireless Telephone by pressing Fcn + the assigned number key. You may also use the Nav keys to scroll through the items and activate the features on this list.

If an OAI application is assigned to a key, OAI information appears on the Feature List.

For more information about features supported on the Wireless telephone, see “Feature programming” (page 31). Features that are not listed are not supported.

Lock and unlock the keypad

Because there is no Lock softkey, the keypad must be locked through the Cfg softkey. Cfg+‘ locks the keypad and displays the **Unlk** softkey. Press Unlk+# (the # key) to unlock the keypad.

Loud noise environments

The handsets are designed to provide optimal voice quality. However, when used in extremely loud noise environments, (for example, close to working heavy machinery), degradation in call quality can be experienced due to echo. Avoid using the handsets in loud noise environments.

Quality of Service (QoS)

Quality of Service is provided by using SpectraLink Voice Priority (SVP), WiFi Standard QoS, or Cisco Client Extensions (CCX) version 4. You cannot mix these QoS modes within the same WLAN; all Wireless Telephones on the network must have the same QoS setting.

SVP

SpectraLink Voice Priority is a proprietary method of WLAN QoS, developed by Polycom, to ensure Enterprise-grade voice quality, battery life, and call capacity for WLAN Handset 6120/6140. SpectraLink Voice Priority requires the WLAN IP Telephony Manager 2245, which is an Ethernet LAN device that works in conjunction with WiFi APs to ensure QoS over the WLAN. Voice packets to and from the Wireless Telephones are forwarded through the WLAN IP Telephony Manager 2245 to ensure voice prioritization as they are routed between the handset and an IP telephony server. For more information, see the *SpectraLink WLAN Telephony Manager 2245: Administration Guide within IP Environments* .

Copyright © 2003-2010 Nortel Networks. All Rights Reserved.

WiFi Standard QoS

WLAN Handset 6120/6140 supports WMM, WMM Power Save, and WMM Admission Control—all QoS standards from the WiFi Alliance based on IEEE 802.11e. The AP must support and enable all three of these QoS mechanisms for the handset to work properly. If the handset is configured for this option and the AP does not advertise all of these features, it fails to operate. The combination of these three standards provides Enterprise-class QoS in terms of voice quality, battery life, and call capacity. This option does not require the WLAN IP Telephony Manager 2245.

CCXv4

The CCX program allows WLAN client devices operating on Cisco APs to take advantage of Cisco-specific features. When the CCXv4 operating mode is selected on the handset, it operates using the required set of Cisco-specific and industry standard QoS mechanisms. This option does not require the WLAN IP Telephony Manager 2245.

Security

The following security methods are supported by the handset.

WPA2 Enterprise

The handset supports WPA2 Enterprise, as defined by the WiFi Alliance. WiFi Protected Access2, which is based on the 802.11i standard, provides government-grade security by implementing the Advanced Encryption Standard (AES) encryption algorithm. The Enterprise version of WPA2 uses 802.1X authentication, which is a port-based network access control mechanism using dynamic encryption keys to protect data privacy. Two 802.1X authentication methods are supported on the Wireless Telephone, EAP-FAST and PEAPv0/MSCHAPv2. Both of these methods require a RADIUS authentication server to be available on the network and accessible to the phone. For more information, see Table 1 "WLAN Handset 6120/6140 specifications" (page 25).

Normal 802.1X authentication requires the client to renegotiate its key with the authentication server on every AP handoff, which is a time-consuming process that negatively affects time-sensitive applications such as voice mail. Fast AP-handoff methods allow for the part of the key derived from the server to be cached in the wireless network, thereby shortening the time to renegotiate a secure handoff. The Wireless Telephone supports two fast AP handoff techniques, Cisco Client Key Management (CCKM) (only available on Cisco APs) or Opportunistic Key Caching (OKC). You must configure these methods for support on the WLAN to ensure proper performance of the handset.

Copyright © 2003-2010 Nortel Networks. All Rights Reserved.

WPA and WPA2 Personal

The handset supports WPA and WPA2 Personal, as defined by the WiFi Alliance. WiFi Protected Access2, which is based on the 802.11i standard, provides government-grade security by implementing the Advanced Encryption Standard (AES) encryption algorithm. WiFi Protected Access, which is based on a draft version of the 802.11i standard before it was ratified, uses Temporal Key Integrity Protocol (TKIP) encryption. The Personal version uses an authentication technique called preshared key (PSK) that allows the use of manually entered keys to initiate security.

Cisco Fast Secure Roaming

Cisco Fast Secure Roaming (FSR) mechanism uses a combination of standards-based and proprietary security components including Cisco Client Key Management (CCKM), LEAP authentication, Michael message integrity check (MIC), and Temporal Key Integrity Protocol (TKIP). Fast Secure Roaming provides strong security measures for authentication, privacy, and data integrity on Cisco APs.

WEP

The handset supports Wired Equivalent Privacy (WEP) with both 40-bit and 128-bit encryption.

System diagram

The following simplified diagram shows the components of a typical system.

Copyright © 2003-2010 Nortel Networks. All Rights Reserved.

Figure 3
System diagram

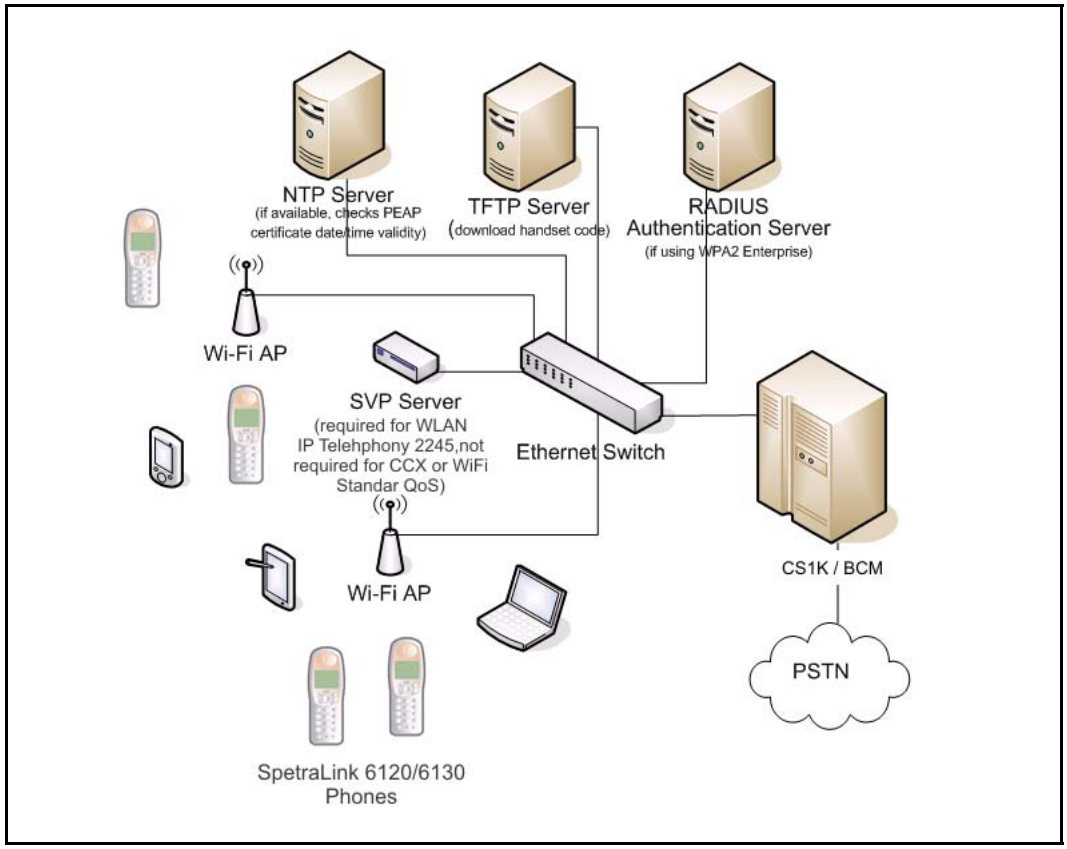

WLAN IP Telephony Manager 2245

The WLAN IP Telephony Manager 2245 is a device that manages IP telephony network traffic on the WLAN system. It is required to utilize the 11Mbs maximum transmission speed available in the handsets. The WLAN IP Telephony Manager 2245 acts as a proxy for the wireless handsets. It provides a number of services including a QoS mechanism, AP bandwidth management, and efficient RF link utilization.

The WLAN IP Telephony Manager 2245 works with the APs to provide Quality of Service (QoS) on the WLAN. All voice packets are encapsulated by the wireless handsets. The encapsulated voice packets to and from the wireless handsets are handled by the WLAN IP Telephony Manager 2245 and routed to and from a Call Server.

SpectraLink Voice Priority (SVP) is the QoS mechanism implemented on the wireless handsets and APs to enhance voice quality over the wireless network. SVP gives preference to voice packets over data packets on

Copyright © 2003-2010 Nortel Networks. All Rights Reserved.

the wireless medium, increasing the probability that all voice packets are transmitted and with minimum delay. SVP is fully compliant with the IEEE 802.11 and 802.11a, b, and g standards.

Nortel does not support use of ICMP Network Redirection with VoWLAN applications due to degraded routing and network performance. The Nortel 2245, upon receiving an ICMP redirect, will update its routing table and attempt to send packets through the new route, however this is not instantaneous. As per the RFC, the route is not permanent and will eventually revert to using the default gateway.

Each subnet, where the wireless handsets operate, requires at least one WLAN IP Telephony Manager 2245. One standalone unit can process up to 80 simultaneous calls depending on the model, as listed in Table 5 "WLAN Telephony Manager 2245 model numbers and capacities" (page 39)Table 6 "WLAN Telephony Manager 2245 model numbers and capacities" (page 39). If greater capacity is required, multiple units can be used in a master-slave arrangement.

Table 5
WLAN Telephony Manager 2245 model numbers and capacities

Model number	Maximum number users
NTTQ60BA	10 simultaneous users
NTTQ60CA	20 simultaneous users
NTTQ60AA	80 simultaneous users (standard)

Table 6
WLAN Telephony Manager 2245 model numbers and capacities

NTTQ60BAE5	10 simultaneous users
NTTQ60CAE5	20 simultaneous users
NTTQ60AAE5	80 simultaneous users (standard)

WLAN Application Gateway 2246

The WLAN Application Gateway 2246 is an optional device that enables third-party applications to communicate directly with up to 10 000 wireless handsets. The WLAN Application Gateway 2246 is connected to the LAN Ethernet switch through an RJ-45CAT5 cable.

For more information about the WLAN Application Gateway 2246, see “WLAN Application Gateway 2246” (page 195).

Copyright © 2003-2010 Nortel Networks. All Rights Reserved.

A WLAN Application Gateway 2246 supports 64 to 10 000 wireless handsets, depending on the model of Gateway, as listed in Table 7 "WLAN Application Gateway 2246 models and capacities" (page 40).

Table 7
WLAN Application Gateway 2246 models and capacities

Model number	Maximum number of users
NTTQ65AA	64
NTTQ65BA	128
NTTQ65CA	256
NTTQ65DA	512
NTTQ65EA	1024
NTTQ65FA	10 000

Access Points

802.11a, b, and g APs provide the connection between the wired Ethernet LAN and the wireless (802.11) LAN. APs must be positioned in all areas where the wireless handsets are used. The number and placement of APs affect the coverage area and capacity of the wireless system. Typically, the requirements for use of handsets are similar to that of other wireless data devices.

The APs must be either SVP-compliant or WMM-compliant to support QoS. For for information about supported APs, see “Compatible Access Points” (page 269).

Handset switchover

If a user on an active call is moving about, the call switches from AP to AP in the subnet. This changeover is transparent to the user.

ATTENTION
Wireless handsets cannot roam with uninterrupted service between subnets unless specific LAN components are present. Certain AP/Ethernet switch combinations establish a Layer-2 tunnel across subnets that enable the handsets to roam. Without this capability, any call in progress will be dropped when the user moves out of range and the handset must be power cycled in order to resume functionality in the new subnet area.

Copyright © 2003-2010 Nortel Networks. All Rights Reserved.

ATTENTION
Ensure that all your APs are attached to the same subnet for proper operation. The handset can change subnets if DHCP is enabled and the handset is powered off then back on when within range of APs on the new subnet. Note that the wireless telephones cannot roam across subnets, since they cannot change IP addresses while operational from one subnet to another, unless assisted by a WLAN controller.

Loss of signal

If a wireless handset is out of range of all APs, it waits 20 seconds for a signal to return. If a signal is not reacquired within 20 seconds, the wireless handset loses connection to the Call Server and any calls are dropped. When the wireless handset comes back into range of an AP, it reestablishes a connection to the Call Server and goes through the system registration process.

ATTENTION
If a wireless handset is out of contact with the system for four seconds (worst case scenario) during UNIStim messaging, a UNIStim failure could occur and cause the wireless handset to lose the UNIStim association with the Line Telephony Proxy Server (LTPS).

Copyright © 2003-2010 Nortel Networks. All Rights Reserved.

Copyright © 2003-2010 Nortel Networks. All Rights Reserved.

Planning

This chapter contains information about the following topics:

- “Challenges of integrating voice applications” (page 44)
- “DHCP server planning” (page 46)
- “TFTP Server planning” (page 48)
- “Syslog Server planning” (page 50)
- “Access point planning” (page 50)
- “Network planning” (page 58)
- “Network recommendation” (page 58)
- “Network management” (page 58)
- “Zones” (page 65)
- “Other network design considerations” (page 66)
- “WLAN IP Telephony Manager 2245 planning” (page 70)
- “Multicast” (page 77)
- “Placement guidelines for the WLAN IP Telephony Manager 2245” (page 77)
- “WLAN Application Gateway 2246 planning” (page 84)
- “WLAN IP Telephony Manager 2245 and WLAN Application Gateway 2246 installation requirements” (page 85)
- “IP address planning” (page 85)
- “Planning worksheets” (page 86)

Copyright © 2003-2010 Nortel Networks. All Rights Reserved.

Challenges of integrating voice applications

The integration of voice applications on any data network causes some challenges. WLANs create a number of problems for voice, above and beyond those inherent to most data networks, such as:

- high overhead of 802.11
- rate scaling and variable capacity
- power adjustments and variable capacity
- Quality of Service (QoS)

High overhead of 802.11

Unlike many other 802.n standards, 802.11 has a very high amount of overhead associated with transmitting a packet. To compare an 802.3 network with an 802.11 network, the difference in overhead for transmitting line-rate minimum frame sizes compared to the line-rate maximum frame sizes on an 802.3 network can be significant, yet not nearly as significant as on an 802.11 network.

For 802.11, the difference in effective throughput varies dramatically with packet size because of the amount of overhead involved in transmitting a frame. Therefore, the effective throughput of the medium is potentially higher for data clients that use very large packet sizes than it is for voice clients that use smaller packets. As an example, using very conservative assumptions for average frame size, no rate scaling, and no contention or collisions, transmission overhead consumes as much as 67% of the total 802.11 medium capacity. By contrast, in an 802.3 network using the same assumptions, the overhead is about 8%.

Rate scaling and variable capacity

802.11b supports four transmission rates or data rates. Usually, as a handset gets farther from an Access Point (AP), both devices scale down to lower transmission rates to compensate for a weaker signal. As a result, a transmission at the 5.5 megabits per second (Mb/s) data rate takes approximately twice as long as the same size packet transmitted at the 11 Mb/s data rate. Longer transmission times mean less transmission time for other handsets. Therefore, rate scaling compromises the overall throughput of the medium.

Rate scaling is necessary to extend the coverage of the AP beyond a very tight region around the AP, but the effects must be taken into account when determining medium capacity. For example, if the maximum call capacity for an AP is 12 when all handsets are using the 11 Mb/s physical (PHY) layer, two handsets scaling down to 5.5 Mb/s as they move away from the AP reduces the total call capacity of that AP to roughly 10. This factor makes engineering the number of APs for the network difficult,

Copyright © 2003-2010 Nortel Networks. All Rights Reserved.

because handsets are roaming around and rate scaling up and down as necessary. Handsets are moving, and as they do, the engineering target of call capacity becomes a moving target.

Power adjustments and variable capacity

A WLAN has dynamic mechanisms in place for adjusting channels, adjusting power, and filling coverage holes, all in response to changes in the Radio Frequency (RF) environment. All of these mechanisms present challenges to the engineering of voice networks.

Dynamic adjustments work well for guaranteeing minimum coverage and connectivity of devices, particularly data devices. Voice requires more planned engineering.

Usually, the number of calls per area (square foot) and calls per AP determines the number of APs required to support the voice applications and devices. Power adjustments affect these parameters. If an AP increases power, it provides coverage for a larger area, meaning a greater call demand for the AP. Doubling the power of an AP can quadruple its coverage area, which means up to four times as much call demand as originally engineered. That increased coverage area also has substantial portions of lower data rate coverage. In addition, the added cochannel interference to other cells using the same channel degrades their call capacity. The net effect is that a network previously tuned for voice is now less capable of meeting the demands of voice than it was before the dynamic power adjustment.

Automatic RF changes do not always have a negative impact on voice-engineered networks. Admission control techniques help with the oversubscription problems related to increasing cell sizes dynamically. Hole filling, after an AP failure occurs, also provides substantial value to a voice solution.

When VoWLAN drives the engineering of the network both in scale and capacity, sometimes automatic RF features create more challenges than they resolve.

Quality of Service

802.11 is a shared media technology, but only one device can use the media at a time. The AP abides by this rule as well.

Because the transmitting device cannot detect collisions, 802.11 uses a statistical mechanism to reduce the possibility of collisions when two devices are ready to transmit at the same time. After the medium becomes available, the mechanism requires the devices to wait a random amount

Copyright © 2003-2010 Nortel Networks. All Rights Reserved.

of time before starting transmission. Because of this simple mechanism, a nonvoice device is as equally as likely to be allowed to transmit as a voice device is.

For example, if a data device does seize the medium, it can send a 1500-byte frame at the lowest data rate (if it is far away from the AP), and further delay voice frames. In addition, several data devices contending for the medium can each, in turn, send large frames before the voice device gained access to the medium.

Without a way to give preferential transmission opportunities to voice devices, supporting voice applications is a tremendous challenge on 802.11 WLANs. SpectraLink Voice Priority (SVP) has evolved into a de facto standard for Quality of Service (QoS) and serves as a model to illustrate the functions that a successful QoS mechanism can implement.

The 802.11e standard ultimately resolves QoS issues, but the delays in the standard create a number of additional implementation-specific challenges. Wi-Fi Multimedia (WMM) is a step toward full 802.11e compliance for voice and multimedia, but it is not a solution. Because it is a step, QoS feature evolution must progress towards better and more solid standards-based QoS capabilities.

WMM refines 802.11 to give statistical preference to certain classes over other classes. It is fully backward-compatible to legacy non-WMM devices, which function just like WMM best-effort class devices.

DHCP server planning

The handset IP-related parameters can be configured manually or through a DHCP server (RFC 1541 and RFC 1533). Any DHCP server can be used, but it must support the following capabilities.

- Provide Client IP address
- DHCP Option 1—Subnet Mask
- DHCP Option 3—Default Gateway
- DHCP Option 60—Class Identifier. The wireless handsets use the Class Identifier of Nortel-221x-A or Nortel-61xx-A. The DHCP server can use the string in the Class Identifier to uniquely identify a wireless handset.
- DHCP Option 66. This can be used to specify the address of the TFTP Server. If this option is not configured, the wireless handset looks at the Next server Boot server (siaddr) Option for the address of the TFTP Server* Vendor Specific Option 43, 128, 144, 157, 191, or 251. Only one of these options is required. The DHCP server encodes the

Copyright © 2003-2010 Nortel Networks. All Rights Reserved.

Server 1 information using the same format as the IP Phone 2004. If the Server 2 information is also present in the option, it is ignored.

- DHCP Option 151. This option contains the IP address of the WLAN IP Telephony Manager 2245. If Option 151 is not configured, the wireless handset performs a DNS lookup of the name SLNKSVP2, if Options 6 (DNS Server) and 15 (Domain Name) are configured.
- DHCP Option 152. If an optional WLAN Application Gateway 2246 is used in the system, its IP address can be specified with this option.

Each wireless handset effectively uses two IP addresses in the wireless subnet: one for the physical wireless handset and a second alias IP address that is used on the WLAN IP Telephony Manager 2245. When allocating addresses in a subnet scope on the DHCP server, a contiguous block of IP addresses as large as the number of wireless handsets supported must be marked as unavailable for distribution for other uses by the DHCP server.

When multiple WLANs are connected to a single Nortel Wireless Security Switch (WSS), the DHCP server can require specific configuration modifications. For a specific WSS that is used for special DHCP configuration requirements, see the WSS documentation.

The WLAN handsets support numerous DHCP extensions for assigning various configuration options. The WLAN handsets supply a vendor class identifier string, which in this case is Nortel-221x-A and Nortel-61xx-A. The WLAN handsets do not accept these options from the DHCP server encapsulated in a 43 Vendor Type option (which is the normal way vendor classes work). Consequently, you do not define these options as part of a vendor class on the DHCP server. Instead, you define them as new options that are assigned using the native code numbers that you give them.

The WLAN handsets specifically request a list of options in the DISCOVER message. The list of options (aside from the IP address and subnet mask) needed by a WLAN handset is:

- Class Identifier (60)
- TFTP Server (66)
- Signaling Server Address and other parameters (43, 128, 144, 157, 191, or 251)
- WLAN IP Telephony Manager 2245 Address (151)
- WLAN Application Gateway 2246 Address (152)

For an example, see Figure 4 "Sample DHCP reservation showing assigned parameters" (page 48).

Copyright © 2003-2010 Nortel Networks. All Rights Reserved.

Figure 4
Sample DHCP reservation showing assigned parameters

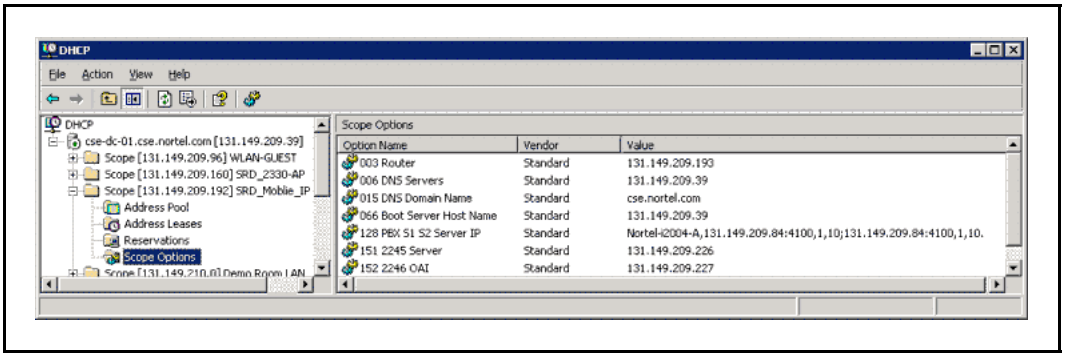

Another use for the DHCP server is to make code upgrades to the handset easier. To prevent handsets from checking for code upgrades, assign the value of 255.255.255.255 for the TFTP server address.

A problem can arise for handset users who travel. For example, the company employing the handset solution is a retailer with many stores. Each store has a local call server for the local employees who use various VoIP devices, so all the attributes are defined at the scope level. What happens if supervisors, who travel from store to store, want to use their handsets at each location? The supervisors can be assigned to a signaling server that does not recognize their phones. The best way to support these users is to create unique reservations in each remote scope for each user's WLAN handset and specify the proper signaling server. This solution can be cumbersome if there are a large number of users who travel.

TFTP Server planning

A TFTP Server (RFC1350) holds the software images for updating the handsets and the WLAN IP Telephony Manager 2245. After the IP address of the TFTP server is configured on a wireless handset, each time the wireless handset is powered on, the wireless handset checks its version of hardware against the hardware on the TFTP Server, and if the version is different, the wireless handset downloads the new hardware from the TFTP Server. Similarly, when a WLAN IP Telephony Manager 2245 reboots, or is manually reset by the operator, it checks its version of software against the version on the TFTP Server. If the versions are different, the WLAN IP Telephony Manager 2245 downloads the new software.

The WLAN Handsets 2210/2211/2212 and WLAN Handsets 6120/6140 share the same configuration file that provides hardware version information for the TFTP process. The actual software files are specific to either the WLAN Handset 2200 series or the WLAN Handset 6100 series.

Copyright © 2003-2010 Nortel Networks. All Rights Reserved.

At an installation, which uses both the WLAN Handsets 2210/2211/2212 and the WLAN Handsets 6120/6140, the software files for both handset series must be installed and available on the TFTP server for the site.

Only one TFTP server is needed in the network, and it need not be colocated with the handsets or the WLAN IP Telephony Manager 2245.

There is a client-dependent aspect to how the handsets function with the TFTP server. How well a server works with the handsets can vary between code versions on the handset.

You can configure handsets to not contact the TFTP server upon boot up, by configuring 255.255.255.255 as the IP address for the TFTP server (either directly in the handset or through the DHCP option). You can configure the WLAN IP Telephony Manager 2245 to not contact the TFTP server by changing the TFTP server address to none in the configuration.

The following information must be considered when planning for a TFTP Server:

- The process for the wireless handset to check its version of hardware against what is available on the TFTP Server takes less than two seconds on a quiet network.
- If the TFTP Server is offline or unreachable, the wireless handset tries for about 10 seconds before giving up and using its existing version of hardware.
- The wireless handset hardware downloading process takes about 30 seconds.
- The TFTP Server must be capable of supporting multiple TFTP sessions.
- When a wireless handset makes a TFTP request, it uses file names without a full path name. Therefore, software updates for the WLAN IP Telephony Manager 2245 and handsets must be installed into the root directory of the TFTP Server.

When the software files are uploaded to the TFTP server. they must be unzipped. Allow time for the TFTP server to refresh and be aware of the files before attempting to download software to the wireless handsets and WLAN IP Telephony Manager 2245. Monitor the TFTP Server for any errors.

Copyright © 2003-2010 Nortel Networks. All Rights Reserved.

The TFTP Server can be located anywhere on the network if the wireless handsets have the subnet mask and default IP gateway configured correctly. However, the wireless handset expects a response within two seconds to any TFTP request. Therefore, the TFTP Server must not be located, for example, at the other end of a slow WAN link.

If too many wireless handsets are attempting to download new software simultaneously, the downloads can slow down or return error messages. To reduce the number of retries and error messages, manage the download process by staggering the times the wireless handsets download the software.

Nortel has tested the following TFTP servers. They are listed in order of preference.

- Nortel TFTP server (ONMS application)
- 3COM TFTP
- PumpkinTFTP

Syslog Server planning

A Syslog Server listens for incoming syslog messages on UDP port 514 and then processes the messages according to local administrative procedures. Usually the syslog messages are logged for subsequent review by the system operator. A number of devices used within a handset wireless configuration are capable of sending messages to a Syslog Server.

The Syslog Server can be any RFC 3164-compliant log server. You can configure the WLAN IP Telephony Manager 2245, WLAN Application Gateway 2246, WLAN APs 2220/2221/2230/2231, and the WLAN Handsets 2210/2211/2212/6120/6140 to generate syslog messages. For information about configuring syslog messages, see the documentation for the Wireless Security Switches and WLAN APs. For information about configuring syslog messages on the WLAN IP Telephony Manager 2245, see “Configure the network” (page 139).

There are numerous third-party Syslog Servers available. You can use any RFC 3164-compliant Syslog Server.

Access point planning

APs utilize radio frequencies to transmit signals to and from the wireless handsets.

Copyright © 2003-2010 Nortel Networks. All Rights Reserved.

It is essential to know where to install the APs to provide effective coverage for wireless handset use. It is necessary to verify that coverage is available where it is needed. The first step is to define exactly where the coverage is needed, which requires a site survey.

Recommendation

A site survey must be performed before installing a wireless LAN. A site survey is also recommended when an existing network structure is modified or when physical changes are made to a site.

Nortel recommends the use of the Nortel Site Survey Tool to perform the site survey.

A site survey is critical to designing and implementing a wireless LAN. The site survey is used to determine the number of APs needed to support the wireless handset users and to determine the best placement of the APs. Different AP vendors provide different tools to do this.

Site survey

To conduct a site survey, set up an AP at a particular location. Use a computer equipped with a wireless LAN device and site survey software or a handset operating in Site Survey mode to measure the strength of the signal from the AP. Move the wireless device around and repeat the measurements to determine the optimum number and best locations for the APs. This method helps identify dead zones and areas where building materials or other factors affect the performance of the network.

Site Survey mode

The handset Site Survey mode displays *negative* dBm levels. These levels represent the strength of the received signal (Received Signal Strength Indication or RSSI) from an AP. The RSSI information aids in determining if WLAN coverage is adequate.

For information about using the Site Survey mode, see *WLAN Handsets Fundamentals (NN43001-505)*.

ATTENTION

The handsets do not require connectivity to a WLAN IP Telephony Manager 2245 or the Call Server to enable the Site Survey mode to be used. The minimum configuration required is the Extended Service Set Identifier (ESSID) of the WLAN or test AP and the WEP keys, if applicable.

Copyright © 2003-2010 Nortel Networks. All Rights Reserved.

Access point requirement considerations for b radio

Each site is unique in its AP requirements. Consider the following points when determining how many APs are needed and where to place them:

- Minimum Radio Signal Strength—All APs in the coverage area must receive a signal strength better than -70dBm. Measurement is made in negative dBm, which measure the amount of signal loss due to distance. Therefore, stronger signals are those with smaller values. For example, -50 and -60 indicate stronger signals than -70; -80 is a weaker, poorer signal than -70.
- Adjacent APs and channel interference—In order to avoid undesirable interference from adjacent APs, ensure that adjacent APs do not use channels that overlap on the same frequencies.

  For more information, see Figure 5 "Frequencies used by b radio" (page 52). In the figure, channels on the same horizontal line do not overlap. In the coverage area of any given AP, signals from other APs using overlapping channels must be at least -15 to -20dBm weaker. Because the Site Survey mode displays signals only from APs on the same Extended Service Set ID (ESSID), check for signals from APs using all ESSIDs to avoid channel overlap.

Figure 5
Frequencies used by b radio

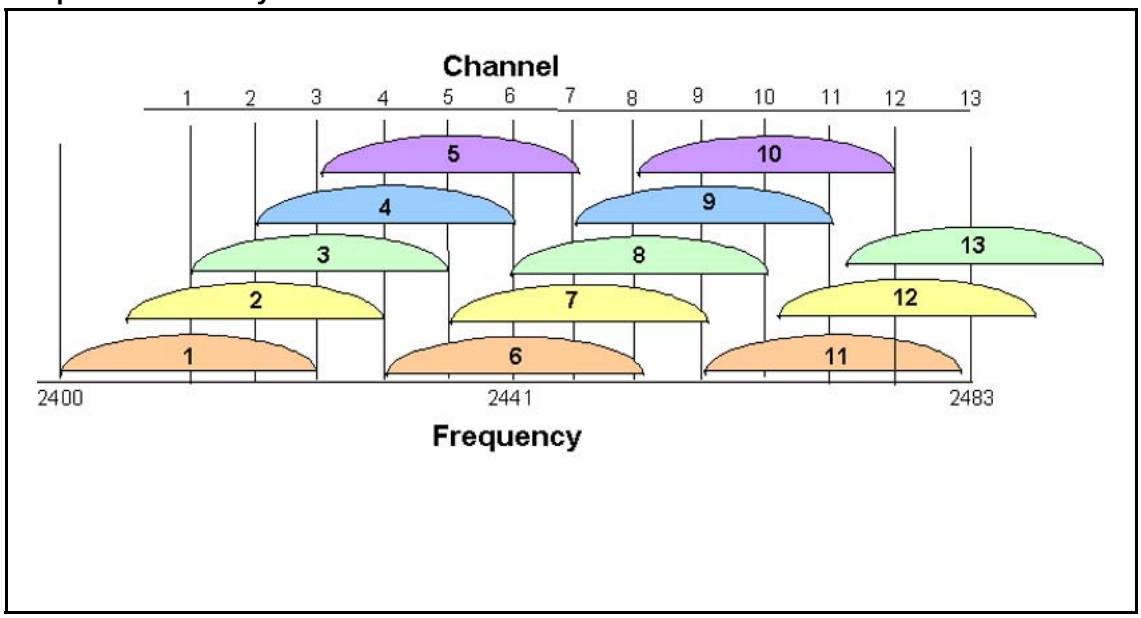

- Wireless handset range—Wireless LAN coverage must be available wherever wireless handsets are used. Although the typical range for a wireless handset is comparable to that of a laptop computer utilizing a wireless LAN PC Card, the range can not be exactly the same. Therefore, it is preferable to use a handset to carry out the site survey, if possible. Remember that wireless handsets might be used

Copyright © 2003-2010 Nortel Networks. All Rights Reserved.

in areas where data devices are not typically used, such as stairwells, washrooms, hallways, and outdoor areas.

- Number of wireless handsets per AP—Estimate the number of wireless handsets and the anticipated call volume per AP area to ensure that the maximum number of calls per AP is not exceeded. For the maximum number of calls per AP for each supported manufacturer, see “Compatible Access Points” (page 269).
- The data rates at which the wireless handsets operate—Higher data rates (such as 11Mbs) can only be sustained while well within the range of the AP. If the wireless handsets are operating near the limits of the radio frequency (RF) coverage from the AP, they automatically drop to 1 Mbs operation.

  handsets require approximately:

  — 7% of available bandwidth per call at 11 Mbs operation

  — 10% of the available bandwidth per call for 2 Mbs operation

  — 15% of the available bandwidth per call for 1 Mbs operation.

  ATTENTION
  These requirements mean that areas with a high-use density must receive RF coverage at the highest data rate of operation.

- LAN bandwidth—Estimate anticipated peak call volume to ensure that enough bandwidth is available to handle the network traffic generated by all the wireless handsets. Handsets require approximately 150 kbps of bandwidth per call. Network traffic can be monitored and analyzed using a network sniffer or an SNMP workstation.
- Number of other wireless devices per AP—The wireless handsets can share bandwidth with other wireless devices. To ensure adequate RF bandwidth availability, consider the number of wireless data devices in use per AP.

ATTENTION
In a very large or complex site, it can be advisable to contract a professional site survey.

Effective site survey

Consider the following points for an effective site survey.

Network usage

Examine the network usage:

- How many people use a wireless handset?
- What areas of the site require wireless handset access?

Copyright © 2003-2010 Nortel Networks. All Rights Reserved.

- How many hours each day are wireless handsets typically in use?
- Which locations are likely to generate the largest amount of traffic?
- Where is future network expansion most likely?

Mobility requirements

Assess the mobility requirements:

- How many wireless handset users are in motion continually, such as in a warehouse or hospital?
- How many users work from different fixed locations throughout the site?

Physical site study

Perform a study of the physical site:

- Study blueprints of the proposed site. A site blueprint provides a map of the site, including the location of objects such as walls, partitions, and anything else that could affect the performance of a wireless handset. This helps identify areas where wireless handsets are less likely to perform well. Many obstructions are not readily visible and, in some cases, a room originally built for a specific purpose, such as a radiology lab, can be converted into something completely different, such as a conference room. The blueprint can also show areas proposed for future building expansion.
- Mark possible wireless handset usage locations on the blueprint and refer to the marked blueprint during the physical walk-through and inventory.

Walk-through and survey

Conduct a physical walk-through and survey:

- Document any items or materials near a proposed AP location that might interfere with reception or transmission and affect wireless handset performance, such as metal shelving.
- Document stock and inventory levels, current environmental conditions, and any materials that can interfere with wireless handset transmissions.
- Walk around the site with a site survey tool before installing APs. Use two portable computers with wireless hardware operating on a point-to-point basis. Using diagnostic software provided by the AP vendor, a coverage area for a potential AP can be determined by keeping one portable computer in one place and moving around

Copyright © 2003-2010 Nortel Networks. All Rights Reserved.

with the other computer. Check with the vendor as to what tools are provided and what approach is recommended for deploying their APs.

RF transmission testing

After the APs are installed and configured, measure the strength of the Radio Frequency (RF) transmissions. Signal strength testing ensures that all usage areas have adequate coverage. This can be performed in two ways.

1. Use the handsets to determine AP signal strength using the Site Survey mode.
2. Use two portable computers with wireless hardware operating on a point-to-point basis. Using diagnostic software provided by the AP vendor, a coverage area for a potential AP can be determined by keeping one portable computer in one place and moving around with the other computer. Check with the vendor as to which tools are provided and which approach is recommended for deploying their APs.

Adjust the APs as needed.

Example of AP placement

Figure 6 "Sample AP placement diagram for b radio" (page 56) is an example of an AP placement diagram based on the results of a site survey.

Copyright © 2003-2010 Nortel Networks. All Rights Reserved.

Figure 6
Sample AP placement diagram for b radio

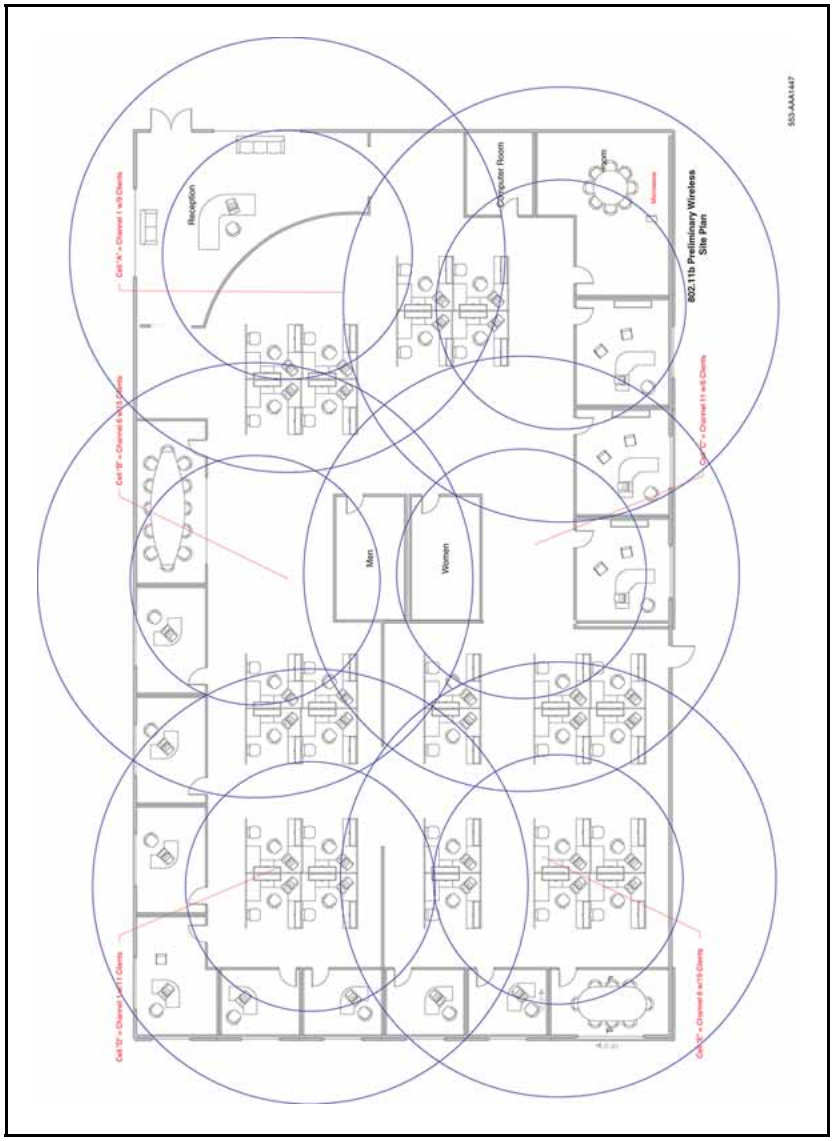

Solving coverage issues

To resolve coverage issues, add and relocate APs.

Solving overlap issues

To resolve overlap issues, reassign channels to the APs or relocate the APs. Like channels require 15–20dBm separation. See Figure 7 "b radio assignment" (page 57).

Copyright © 2003-2010 Nortel Networks. All Rights Reserved.

Figure 7
b radio assignment

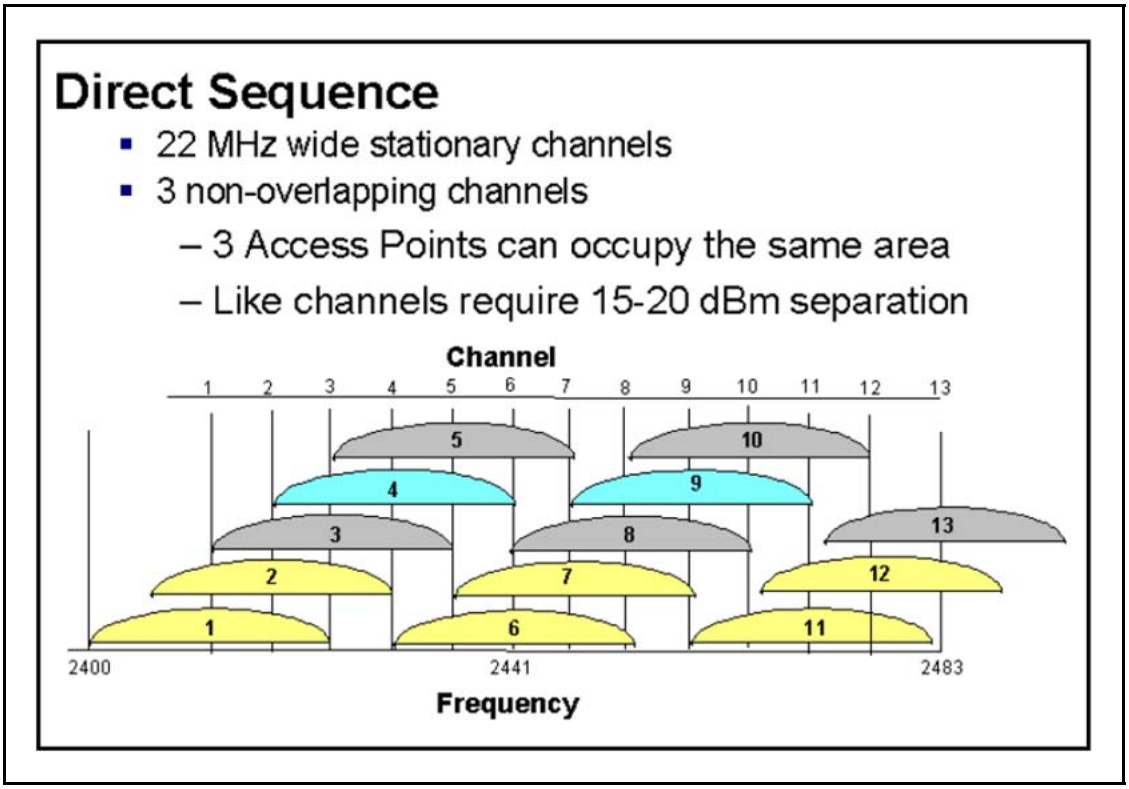

For more information about overlap, see the AP vendor documentation.

Access point requirement considerations for a radio

Most of the design considerations for the b radio, also apply to cases where the a radio is used. However, the adjacent APs and channel interference of the 802.11a radio operates in the 5 Ghz frequency and provides 12 non-overlapping, non-interfering channels. For example, in the United States regulatory domain there are 3 U-NNI bands—lower, middle, and upper. Each of which are with a different operating frequency range and with different maximum allowed transmit power level.

The following table shows the different operating frequency rand and different maximum transmit power level.

Band (GHz)	3**Channel Numbers**
U-NII lower band (5.15-5.25)	36, 40, 44, 48
U-NII middle band (5.25-5.35)	52, 56, 60, 64
U-NII upper band (5.725-5.825)	149, 153, 157, 161

The United States also allows for transmissions in the ISM regulatory domain on channel 165, whose center frequency is 5.825 GHz which is at the upper edge of the upper U-NII band. The 802.11a implementation

Copyright © 2003-2010 Nortel Networks. All Rights Reserved.

on the wireless handsets is based on U-NII regulations and do not communicate on channel 165. Therefore, it is important not to configure any WLAN Access Points for operation on channel 165.

Network planning

You must ensure that all connections and interfaces for the IP Telephony network are configured as full-duplex. Duplex mismatches anywhere on the WLAN can cause the wireless IP Telephony system not to function normally.

Network recommendation

To maximize security and to minimize accessibility for unnecessary traffic to reach the WLAN Handsets, Nortel recommends that you adopt the following measures:

- Create a separate VLAN for voice traffic and map the handsets to this VLAN to mask the handsets from other devices on the network.
- Implement Access Control Lists (ACLs) on the WLAN infrastructure to contain the handsets but deny other traffic.
  - The WLAN IP Telephony 2245 uses IP protocol 119 and encapsulates both signalling and media (RTP) into a common packet format allowing the access points to prioritize legitimate handset traffic.
  - Necessary traffic for instance DHCP must be allowed, while all other traffic is denied.

Sample Access Control List

The following is a sample ACL for a voice VLAN named VLAN120.

```
set security acl ip SpectraLink permit udp 0.0.0.0 255.255.255.255
eq 68 0.0.0.0 255.255.255.255 eq 67
set security acl ip SpectraLink permit udp 0.0.0.0 255.255.255.255
eq 67 0.0.0.0 255.255.255.255 eq 68
set security acl ip SpectraLink permit cos 6 udp 0.0.0.0
255.255.255.255 0.0.0.0 255.255.255.255 eq 69
set security acl ip SpectraLink permit cos 7 119 0.0.0.0
255.255.255.255 0.0.0.0 255.255.255.255
set security acl ip SpectraLink deny 0.0.0.0 255.255.255.255
commit security acl SpectraLink
set security acl map SpectraLink vlan VLAN120 in
set security acl map SpectraLink vlan VLAN120 out
```

Network management

Network management is as much strategy and process as it is applications. Managing a converged network consists of four key phases:

Copyright © 2003-2010 Nortel Networks. All Rights Reserved.

1. Assessment—Network Health Checks and WLAN Site Surveys (post-deployment) are critical assessment items. The main goal is to verify the ability of the network to provide voice at the required Quality of Experience (QoE).
2. Predeployment—Before you deploy VoIP handsets, make the network ready by rolling-out QoS across the network. This phase assumes the WLAN itself is already deployed.
3. Ongoing monitoring—Regularly monitor the performance of the converged network to ensure that voice quality continues to meet expectations as the network grows and evolves over time.
4. Reporting and planning—Keep track of exceptions and problems and form plans to resolve issues. The resolution of problems takes you back through the assessment, predeployment (QoS configuration), and monitoring phases again.

Nortel ties this business cycle together seamlessly with a set of products that provide a comprehensive solution. This solution is comprised of integrated and innovative standards-based technologies, such as Real Time Control Protocol Extended Reports (RTCP-XR) for detailed real-time management of calls in progress. The overall solution is referred to as Proactive Voice Quality Management (PVQM).

Assessment through a WLAN site survey

Technical support for VoWLAN is contingent on customers performing a site survey of the WLAN. Currently, Nortel recommends the use of the Ekahau Site Survey tool to verify the network deployment, although other site survey tools are acceptable. The Ekahau product runs on a PC and uses a WLAN network interface card (NIC) to collect data for analysis. The output of the tool is a number of robust visualizations of the network. The software verifies the basic coverage of the network and provides a number of visualizations that are useful for VoWLAN deployments.

Perform capacity planning using the data rate analysis view, which shows a color-coded view of the maximum data rate across all APs in the network. With this view, you can see where your handsets can use the 11 Mb/s data rate as opposed to scaling down to lower rates. Planning based on data rate can have a big impact on voice-call-capacity planning.

Predict AP selection and roaming using the strongest AP view. This view shows the AP with the strongest signal for each location in the building and uses color codes for each AP. With the AP view, you can predict the APs that are likely to be the primary choice of voice devices to use given their location. You can also predict where the handoff to another AP (and which AP) can occur for a moving user.

Copyright © 2003-2010 Nortel Networks. All Rights Reserved.

Perform resiliency planning through the AP reachability view. This view presents a color-coded visualization of the number of reachable APs from each point in the network. Locations where the tool detects one AP, locations where the tool detects two APs, locations where the tool detects three APs, and so on, are marked in distinct colors. With this visualization, you can see where the network is vulnerable to a single point of failure. It is preferable to have at least two APs that are capable of offering coverage to every point in the building.

You can also use the AP reachability view to perform location service planning. A minimum of three APs must be reachable for triangulation to be effective. Therefore, use the AP reachability feature to verify a consistent 3+ AP coverage across the building.

Location capabilities have a number of client dependencies, so verifying triangulation coverage is more complex than it appears. There are two main location-solution types:

- those that use the client to collect information about the APs in the network (client-based location)
- those that use the APs to collect information about the client (network-based location)

Both location-solution types use a form of triangulation to compute the location of the device. Depending on the power level of the AP, it can sometimes hear devices that it cannot transmit to. These factors combined create the following two scenarios:

- It is difficult to calibrate network-based solutions by using a laptop running the site survey, because APs can sometimes hear clients that cannot hear the AP. If AP transmission power levels are not at a maximum, they can hear clients over a greater distance than their own transmissions can travel. This scenario can cause the site survey application to underestimate the number of APs that can participate in triangulation.
- Client-based solutions cannot triangulate APs that are not detectable because their power is lower. But the site survey application can accurately reflect the number of APs that can be used for triangulation.

Assessment using NetIQ Vivinet Assessor

The Network Health Check is probably the most critical step toward ensuring a smooth rollout for any VoIP deployment. This statement applies even more so to VoWLAN, because a WLAN is a more challenging QoS environment than modern wired networks.

Copyright © 2003-2010 Nortel Networks. All Rights Reserved.

The NetIQ Vivinet Assessor 3.0 or later is the tool of choice for network health checking. (Previously NetIQ Chariot, now an Ixia product, was recommended for network health checking.) This product uses a laptop (for WLAN testing for WLAN mobility) as a voice-traffic generation and analysis tool. You can configure several nodes in various parts of the network, to simulate calls to and from those areas. Each node simulates call volumes through traffic generation so that you can stress-test access links, backbones, and WAN links as necessary. You can also configure codecs, packetization rates, and other factors to closely mimic the future VoIP environment.

Vivinet Assessor performs a comprehensive analysis of the simulated traffic, including reports on delay, jitter, and packet loss. The R values or Mean Opinion Score (MOS) are reported for these simulated traffic loads to provide a baseline for performance expectations. These analyses are also used for capacity planning because they show the capacity at which the Quality of Experience (QoE) ratings start to fall. More importantly, the process of analyzing the network reveals many latent network problems that can otherwise remain undetected until deployment.

For example, duplex mismatches can exist in various locations of the network, and data applications, being very tolerant to packet loss, typically do not reveal the problem unless it is severe. The issue is immediately noticeable when a voice call traverses such a link. Vivinet Assessor is extremely useful for identifying the symptoms of issues and fixing such problem areas in the network long before the customer places the first call.

Monitoring and reporting with Enterprise Network Monitoring System

Enterprise Network Monitoring System (ENMS) 10.5 is a cross-portfolio management platform for fault management, network visualization, and troubleshooting. It can receive traps and statistics from the Communication Server 1000, as well as virtually all other Nortel products. It can:

- discover the call server equipment that it supports
- display the information for the slot or port to which the call server components are attached
- discover the TLAN and ELAN connections on a Communication Server 1000 Signaling Server

ENMS differs from the Communication Server 1000 Telephony Manager in that ENMS is a comprehensive monitoring platform for virtually all Nortel products, while Communication Server 1000 Telephony Manager supports only VoIP products and features. ENMS is the product that ties all the other management packages together.

Copyright © 2003-2010 Nortel Networks. All Rights Reserved.

ENMS 10.5 makes convergence management quick and easy with the Converged View in the new IP Service Management (IPSM) display. The IPSM display provides a business-oriented overview of the Convergence Service. With IPSM, an operator can see the status of overall service level that is being provided, and easily zoom in with detailed troubleshooting tools if a problem is indicated. If a phone is unreachable, or if there is a degradation of quality in a call, it is indicated in the IPSM tabular view. The call quality alert shows the near-end and far-end IP address and Terminal Number (TN).

Figure 8 "ENMS 10.5 IPSM overview" (page 62) shows the IPSM overview with a list of the phones that are registered to a particular Communication Server 1000 system. Many details, including type of phone, hardware revision, IP address, set TN, registered TN, source, and destination IP port are displayed. Phones or components of the Communication Server 1000 system change color to indicate status. The pie chart in the lower left corner of the display updates to show overall status and quality of the phones and Communication Server 1000 systems in the display.

Figure 8
ENMS 10.5 IPSM overview

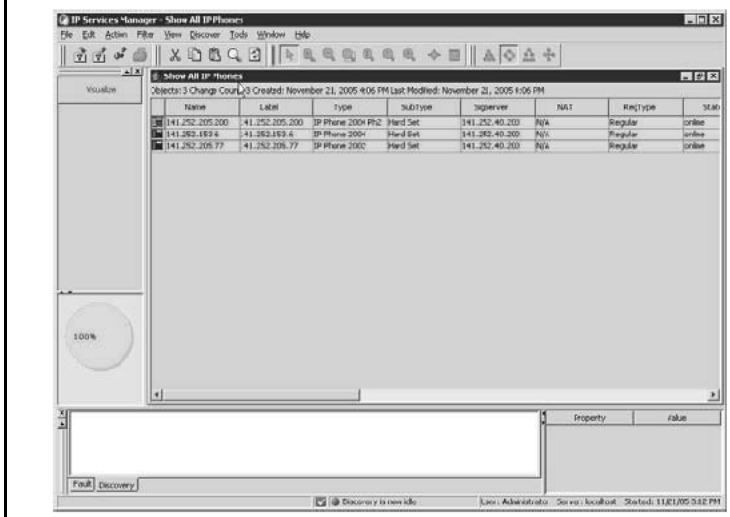

After you click on a specific IP Phone, the panel in the lower right portion of the screen displays details automatically, such as the Communication Server 1000 system, with which the IP Phone is registered. You can then right-click on the phone to show a data network path trace graphically, as shown in Figure 9 "ENMS 10.5 IPSM convergence view" (page 63).

For troubleshooting purposes, you can view a path trace to the signaling server or any other IP address.

Copyright © 2003-2010 Nortel Networks. All Rights Reserved.

Figure 9
ENMS 10.5 IPSM convergence view

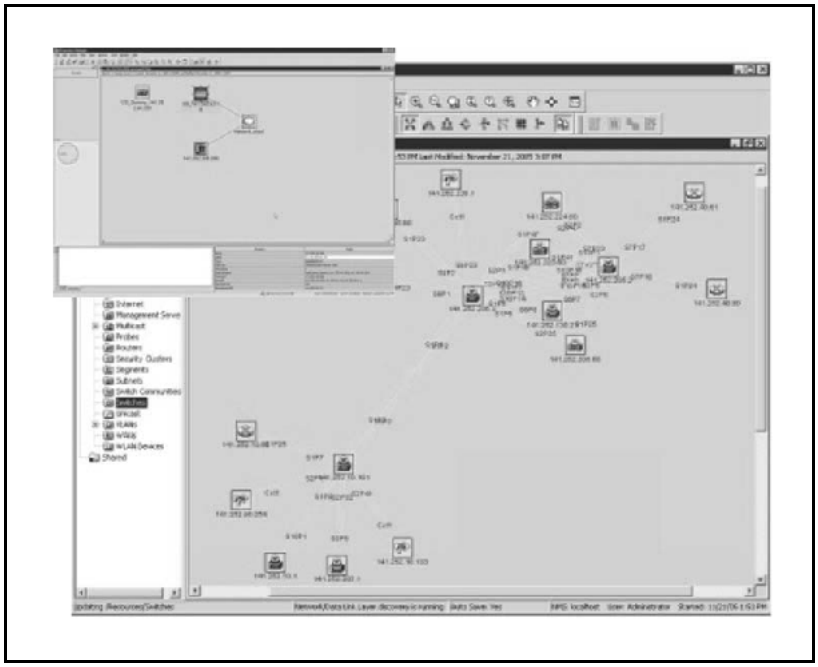

ENMS can provide down to physical slot port connectivity for the wired network. This topology data is extremely useful when shown in the Converged View of a Path Trace. You can set the display to refresh periodically to display the latest information about IP address changes.

With RTCP-XR, you can right-click on the set in the IPSM Convergence or tabular view and retrieve detailed real-time set statistics, such as local and remote latency and jitter.

Monitoring and reporting with Communication Server 1000 Telephony Manager

Communication Server 1000 Telephony Manager is an element manager for the Communication Server 1000, as well as a platform for receiving traps and collecting call statistics and other performance-related data. Call and performance statistics are collected from the Communication Server 1000 and stored on the Communication Server 1000 Telephony Manager server. You can display this data in a number of graphical reporting views, many of which are predefined for ease of use. With these features, the Communication Server 1000 Telephony Manager server can act in a basic performance-management role for voice (this is not the same thing as Proactive Voice Quality Monitoring) within the management framework.

Copyright © 2003-2010 Nortel Networks. All Rights Reserved.

Call tracking is another feature that is not specifically related to QoS monitoring or fault monitoring, but that is important to solution manageability. With this feature, you can:

- track calls that fit defined profiles and collect data for later trend analysis
- monitor individual extensions in real time
- have alarm notifications sent to pagers or workstations for calls that fit specified profiles

Communication Server 1000 Telephony Manager can perform some alarm-management functions and is a trap receiver for the voice products it supports. It polls call servers, through SNMP, for additional alarms that are not sent as traps. Alarms can be received from the Communication Server 1000. Communication Server 1000 Telephony Manager can display fault information locally and also send the traps on to ENMS, Vivinet Manager, or other management platforms.

Monitoring and reporting with NetiQ Vivinet Assessor, Vivinet AppManager, and Vivinet Diagnostics

Vivinet Assessor is a Network Health Check and diagnostics tool. The software also has a number of features for the ongoing monitoring and reporting of issues. You can install Performance Endpoint agents on laptops that have WLAN interfaces, to monitor the performance and quality of the WLAN. Send this data to the Vivinet Manager for reporting and analysis. You can configure the agents with a schedule for generating VoIP traffic to run spot checks on the ability of the network to support VoIP at required quality levels.

Vivinet AppManager is a product that can be purchased separately and used in conjunction with Vivinet Diagnostics to provide detailed service-level monitoring, reporting, and troubleshooting in a diverse network environment.

For the Communication Server 1000, Vivnet AppManager provides information about the percentage of devices available versus unavailable, health of interfaces, Voice Call Quality and QoS for Signaling Server, and Voice Gateway Media Cards. AppManager also provides summary analysis for data loss, jitter, latency, and R-Value.

Vivinet Diagnostics is a product that can be purchased separately and used in conjunction with Vivinet AppManager. After Vivinet AppManager receives a call-quality alert from a Nortel voice system such as a Communication Server 1000 or BCM for a call in progress, AppManager generates an alert.

Copyright © 2003-2010 Nortel Networks. All Rights Reserved.

The alert from Vivinet AppManager activates Vivinet Diagnostics, which traces the path of the call, collects diagnostic information, and can perform root cause analysis. You can save the results for further analysis and action. For an example, see Figure 10 "NetiQ Vivinet Diagnostics example" (page 65).

Figure 10
NetiQ Vivinet Diagnostics example

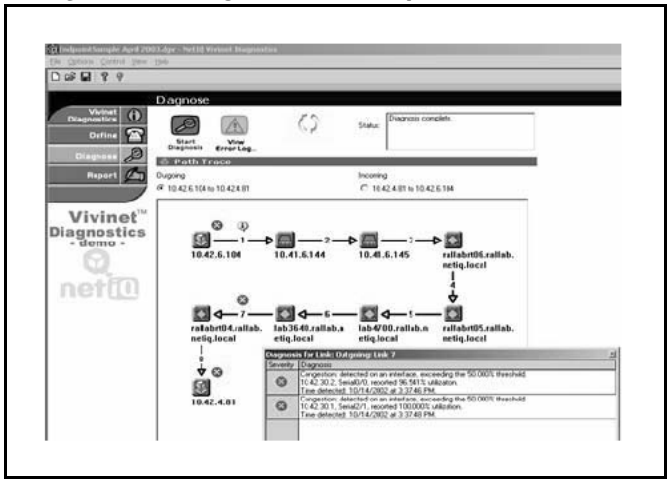

Communication Server 1000 Telephony Manager

You can configure voice devices, from stations to communication servers (including CS 1000), from the Communication Server 1000 Telephony Manager server. You can also perform station administration through the Communication Server 1000 Telephony Manager.

Although it has bulk configuration capabilities, the Communication Server 1000 Telephony Manager best serves small- to medium-size environments. For larger VoIP installations, Enterprise Subscriber Manager is a more scalable set-management platform.

Perform the actual configuration of the WLAN handsets manually or use the DHCP server. Configure the call server aspects of the handset (such as TN and DN) on the Communication Server 1000, preferably through the Communication Server 1000 Telephony Manager.

Zones

Nortel recommends that the handsets be assigned to dedicated zones. The zones can be used to manage the bandwidth of the WLAN IP Telephony Manager 2245 groups. As well, zone designations can be used to list the wireless handsets that are currently registered or are registered using LD 117 commands.

For more information, see “Bandwidth management” (page 89).

Copyright © 2003-2010 Nortel Networks. All Rights Reserved.

Other network design considerations

WLAN Handsets 2210/2211/2212 are 802.11b-only devices and the WLAN Handsets 6120/6140 are 802.11b, 802.11g and 802.11a devices, which creates challenging choices for network deployments. The following list describes some of the points to consider when determining network deployment:

- Separation of devices by multiple SSIDs on the same radio does not create multiple shared mediums—the devices still transmit and receive using common radio resources on a common channel.
- Current QoS mechanisms in the industry are most effective at protecting and prioritizing traffic on the downstream, that is, from AP to Mobile Unit (MU). Wi-Fi Multimedia (WMM) improves upstream prioritization by giving a statistical edge to different classes of devices so they are more likely to transmit ahead of lower class devices. Still, other devices sometimes cheat on the contention window to gain a statistical advantage, though there are drawbacks to this method. There is no real arbitration or coordination between multiple devices that need to transmit packets upstream.
- The 802.11g devices in a mixed 802.11b/g network are statistically favored by a 2:1 ratio over 802.11b devices. For example, this means that if there is one 802.11g device and one 802.11b device and both are trying to saturate the medium with a data transfer, the 802.11g device transmits, on average, two frames for every one frame from the 802.11b device. If there are two 802.11g devices for every one 802.11b device, on average, four 802.11g transmissions occur before one 802.11b transmission occurs.
- Although 802.11g devices transmit more often, because of higher data rates, they spend less time transmitting packets. This means that 802.11g devices are not necessarily favored in the network. Having too many 802.11g devices relative to 802.11b devices upsets this balance.

There is no easy way to determine whether to maintain an 802.11g-only network or an 802.11b-only network. If there is a significant amount of upstream traffic from data devices, the best course of action is to keep data devices off the 802.11b/g network entirely. Large numbers of 802.11g devices can also cause problems with 802.11b handsets on the medium. However, if you force the 802.11g devices to use 802.11b for communication, the situation can become worse.

Disabling 802.11g support and maintaining a dual-mode 802.11a/b network can make 802.11a more attractive for dual-mode data clients and reduce the amount of data devices using the 2.4 GHz spectrum. Enabling 802.11g support can increase the number of data devices sharing the 2.4

Copyright © 2003-2010 Nortel Networks. All Rights Reserved.

GHz channels, which is detrimental to voice devices. As a general policy, for large amounts of data, use 802.11a for data and 802.11b for voice, but leave 802.11g disabled.

Alternately, if there are few 802.11b/g data devices and the WLAN is to be used primarily for voice, consider enabling 802.11g support. The goal is to carefully control the number of data devices that share radio resources with voice devices.

For example, if a large number of laptops exist in a campus and if 802.11g mode is enabled, it is probable that a large proportion of those laptops use 802.11g (2.4 GHz) for connectivity, which makes it much more difficult to provide good quality voice for handsets. If 802.11g is disabled, it is probable that a large proportion of those laptops use 802.11a (5 GHz) because it offers much higher throughput compared with 802.11b, and voice quality benefits.

Access Point interference

When more than three APs are deployed, the APs themselves are a significant source of interference. This is known as cochannel interference. Therefore, it is important to consider how channel reuse impacts network capacity.

To maximize the distance between APs operating on the same channel, tile the channels. To scale capacity, add more APs in the same geographic region and at the same time, reduce the transmit power of each AP.

However, the overall throughput increase does not increase proportionally with the number of APs that are added because each individual AP loses throughput, even though the number of APs per square foot is increasing. Note that the biggest loss of per-AP throughput occurs when going from nonchannel-reuse to reusing channels. For more information about this subject, see the whitepaper available from www.nortel.com.

The goal is to achieve the required call density for the number of calls per square foot. Getting the most calls per AP is not a useful objective of capacity planning. The parameters that must be tuned to engineer a voice network for capacity are:

- channel reuse factor (that is, the number of channels in the channel plan)
- transmit power of each AP
- the radius of the cell (that is, based on the physical distance between APs)

Copyright © 2003-2010 Nortel Networks. All Rights Reserved.

Because of the complexity of this topic and the simulation data that is required, it is not possible to discuss tuning all three variables or even two variables at a time. An example of a light to medium office environment (mostly cube space but some walls) is provided instead.

Example

The channel reuse factor for 802.11b networks is fixed at three (three nonoverlapping channels in the 2.4 GHz range), corresponding to channels 1, 6, and 11. The transmit power is fixed at 50 mW, which establishes the radius of the cell.

Now the effects of cell size, based on the other fixed parameters, can be compared.

If the deployed cells have a radius of anywhere from 33 ft to 75 ft, the call capacity per square foot is essentially the same. This means that packing cells in tighter than a 75 ft radius per AP is a waste of money. This example shows that in a typical office environment with APs at half power, you can deploy APs anywhere from 100 ft to 150 ft from each other. More walls mean there must be less distance between APs, and lowering the power of the AP lessens the required distance between APs, both of which also serve to increase the net call density.

SSID options and limitations

The traditional WLAN deployment requirement was to implement separate SSIDs for voice and for data. This requirement no longer exists, though it is still a useful deployment option in some circumstances.

If all devices implement common security encryption mechanisms (for example, Wi-Fi Protected Access), a single SSID can be offered to support both voice and data. The benefit of this configuration is that users cannot control to which network they connect. This is a security mechanism that prevents curious or malicious users from putting their laptops in the telephony VLAN. At the same time, it prevents inadvertent configuration mistakes. Either way, the simplified user interface to the network benefits both network administrators and end users.

If data devices do not use the same encryption mechanism as WLAN handsets, it is best to implement multiple SSIDs—one for the handsets and the other for the data devices.

If necessary, one way to ensure that multiple handset SSIDs on the same AP still work without oversubscribing the medium is to cut in half the number of calls per AP configured on the WLAN IP Telephony Manager 2245.

Copyright © 2003-2010 Nortel Networks. All Rights Reserved.

Nortel does not recommend a closed system for VoWLAN installations that use more than one SSID, including converged data and voice WLANs. The reason is that the SSID serves a valuable purpose in roaming. When it is hidden by not being included in the beacon, roaming devices must attempt to try all closed system APs. This result can dramatically impact device handoff times.

Layer 3 implementation

Where possible, simplify the number of subnets that are used for client devices. Even in a Distributed Campus architecture, you can have a few central subnets for clients. As a general rule, Nortel recommends that wired or wireless IP phones be placed in a separate VLAN (subnet) from data devices. This placement can be accomplished by providing one VLAN (subnet) for all WLAN telephony devices, as shown in Figure 11 "Single telephony VLAN implementation" (page 69). The data client VLAN design is an abstraction (the best practice is to simplify). The WLAN data network can have many client subnets, or one— that is unimportant in this context because the focus is support of VoWLAN.

Figure 11
Single telephony VLAN implementation

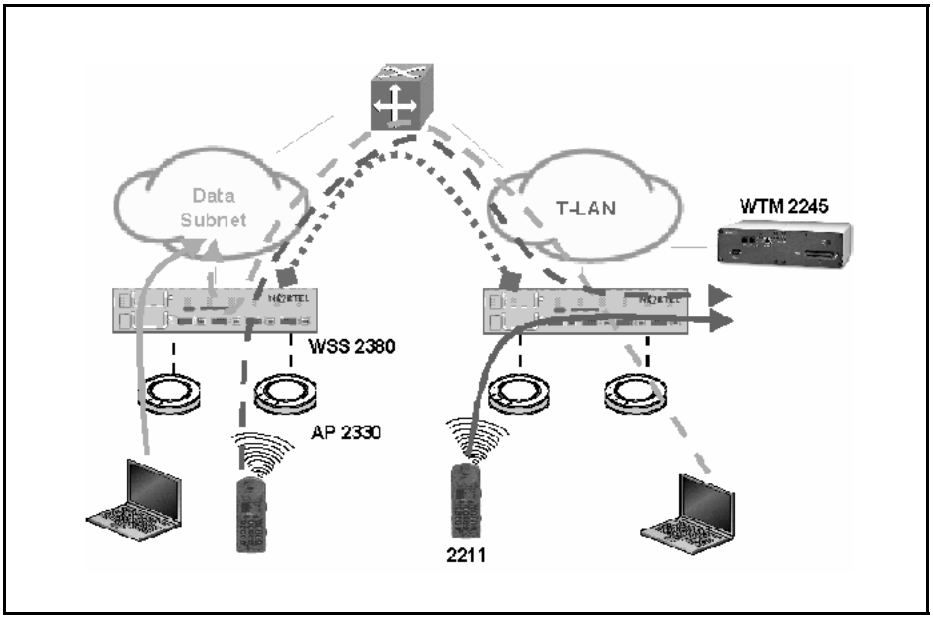

Consolidating VoWLAN handsets into one VLAN (subnet) has a few advantages. First, it allows the WLAN IP Telephony Manager 2245 design to be greatly simplified. Instead of purchasing and deploying at least one WLAN IP Telephony Manager 2245 per voice subnet, you can now install one WLAN IP Telephony Manager 2245 for the single voice subnet. For larger VoWLAN deployments, more WLAN IP Telephony Manager 2245

Copyright © 2003-2010 Nortel Networks. All Rights Reserved.

units may be required in that single subnet to support the number of calls; however, fewer WLAN IP Telephony Manager 2245 units are needed than in an equivalent multisubnet deployment.

A second advantage is that external security measures are easier and less costly to implement. It is common practice to put a telephony WLAN behind a firewall for security reasons. This is because security features on handsets, particularly authentication capabilities, tend to lag behind the industry. So to mitigate risks, you can use a firewall to block all but the ports needed for IP Telephony. This practice becomes complex and costly when multiplied by a number of subnets. A more cost-effective alternative to implementing a firewall is to assign private addresses to the handsets and let the WLAN IP Telephony Manager 2245 network address translation (NAT) capabilities serve as a form of secure firewall to the telephony LAN (T-LAN). Of course this is not as secure as using a traditional firewall to secure the T-LAN.

The downside of putting all telephony devices into the same subnet is that broadcasts are increased. Also, while security is simplified, the importance of implementing adequate security measures increases because more devices will be impacted in the event of a security breach.

Note: Nortel does not recommend running the WLAN IP Telephony Manager 2245 behind a firewall. Any routing device introduces a possibility of delay, and the higher layer routing tends to introduce longer and less predictable delays. Regularly timed packets are important in order to assure optimum voice quality, so Nortel recommends putting as little and as simple networking equipment between the WLAN IP Telephony Manager 2245 and the phones as possible.

WLAN IP Telephony Manager 2245 planning

Both the WLAN IP Telephony Manager 2245 and the WLAN Application Telephony Gateway 2246 are connected to the Ethernet switch.

Installation requirements

The WLAN IP Telephony Manager 2245 requires a CAT5 cable connection between its network port and the Ethernet switch. The WLAN IP Telephony Manager 2245 can autonegotiate to the type of port on the Ethernet switch. It supports 10BaseT, 100BaseT, full-duplex and half-duplex port types.

Nortel recommends 100BaseT full-duplex.

Copyright © 2003-2010 Nortel Networks. All Rights Reserved.

ATTENTION
When multiple WLAN IP Telephony Manager 2245 units are used, all the WLAN IP Telephony Manager 2245 units must use a uniform media type. Do not use full-duplex on some and half-duplex on others, or 10BaseT on some and 100BaseT on others.

Capacities

The WLAN IP Telephony Manager 2245 is available in three models:

- WLAN IP Telephony Manager 2245-80: Serves 500 powered-on handsets (80 simultaneous calls).
- WLAN IP Telephony Manager 2245-20: Serves 20 powered-on handsets.
- WLAN IP Telephony Manager 2245-10: Serves 10 powered-on handsets.

Capacity is measured by active calls for the WLAN IP Telephony Manager 2245-80 and by powered on handsets for the WLAN IP Telephony Manager 2245-10 and the WLAN IP Telephony Manager 2245-20. The capacity of a system that is not based on 100Base-T, full-duplex is lower. Nortel recommends that you not use older technology equipment.

In any subnet where wireless handsets are used, each subnet must have one or more WLAN IP Telephony Manager 2245 units. A WLAN IP Telephony Manager 2245 group on a subnet consists of one or more WLAN IP Telephony Manager 2245 units and their associated wireless handsets.

Only one master WLAN IP Telephony Manager 2245 can be on a subnet.

WLAN IP Telephony Manager 2245 groups

WLAN IP Telephony Manager 2245 groups are those that have more than one WLAN IP Telephony Manager 2245 in order to accommodate larger systems and a higher volume of wireless telephony traffic.

In a group comprised of multiple WLAN IP Telephony Manager 2245 units, the wireless handsets are configured with the IP address of a designated WLAN IP Telephony Manager 2245. As the wireless handsets register with the designated WLAN IP Telephony Manager 2245, they receive a list of other WLAN IP Telephony Manager 2245 units in the network. The wireless handsets distribute among the WLAN IP Telephony Manager 2245 units to share the load, which then becomes their registration point.

Copyright © 2003-2010 Nortel Networks. All Rights Reserved.

Master WLAN IP Telephony Manager 2245

In a group comprised of multiple WLAN IP Telephony Manager 2245 units, a master WLAN IP Telephony Manager 2245 must be identified and must be configured with a static IP address. The wireless handsets and the other WLAN IP Telephony Manager 2245 units locate the master by using the static IP address of the master. The loss of a nonmaster WLAN IP Telephony Manager 2245 does not significantly affect the operation of the remaining WLAN IP Telephony Manager 2245 units. However, the loss of the master WLAN IP Telephony Manager 2245 results in a loss of all communication between all the WLAN IP Telephony Manager 2245 units. This causes the loss of all active calls, and wireless handsets cannot check in until communication with the master is reestablished.

WLAN IP Telephony Manager 2245 failure

After the initial registration, if a WLAN IP Telephony Manager 2245 units fails, the following occurs:

1. The wireless handset drops active calls.
2. The wireless handset then re-registers with another WLAN IP Telephony Manager 2245 units.
3. The wireless handset returns to the active state.

   The recovery period is approximately 60 seconds.

The WLAN IP Telephony Manager 2245 failure has no effect on other wireless handsets registered to other WLAN IP Telephony Manager 2245 units.

Group capacities

The number of calls that an individual WLAN IP Telephony Manager 2245 can support is dependent on the number of WLAN IP Telephony Manager 2245 units in the subnet. Assuming that a 100 Mb/s full-duplex connection to the network exists, a single stand-alone WLAN IP Telephony Manager 2245 unit can manage up to 80 active calls. If two WLAN IP Telephony Manager 2245 units are installed in a master/slave configuration, each can support up to 64 active calls for a total of 128 calls.

Table 8 "Multiple WLAN IP Telephony Manager 2245-80 capacities" (page 73) lists the call capacities for WLAN IP Telephony Manager 2245-80 groups. Table 9 "Multiple WLAN IP Telephony Manager 2245-10 and 2245-20 capacities" (page 73) lists the handset capacities for WLAN IP Telephony Manager 2245-10 and 2245-20 groups.

Copyright © 2003-2010 Nortel Networks. All Rights Reserved.

Table 8
Multiple WLAN IP Telephony Manager 2245-80 capacities

Number of WLAN IP Telephony Manager 2245 units	Calls per WLAN IP Telephony Manager 2245 units	Total calls	Erlangs	Number of wireless handsets 10% use	Number of wireless handsets 15% use	Number of wireless handsets 20% use
1	80	80	65	500	433	325
2	64	128	111	1000	740	555
3	60	180	160	1500	1067	800
4	58	232	211	2000	1407	1055
5	57	285	262	2500	1747	1310
6	56	336	312	3000	2080	1560
7	56	392	367	3500	2447	1835
8	55	440	415	4000	2767	2075
9	55	495	469	4500	3127	2345
10	55	550	524	5000	3493	2620
11	55	605	578	5500	3853	2890
12	54	648	621	6000	4140	3105
13	54	702	674	6500	4493	3370
14	54	756	728	7000	4853	3640
15	54	810	782	7500	5213	3910
16	54	874	836	8000	5573	4180

Table 9
Multiple WLAN IP Telephony Manager 2245-10 and 2245-20 capacities

Number of WLAN IP Telephony Manager 2245 units	Number of handsets WLAN IP Telephony Manager 2245-10	Number of handsets WLAN IP Telephony Manager 2245-20
1	10	20
2	20	40
3	30	not applicable
4	40	not applicable

For example, if there are two subnets for handsets in a campus and some handsets are directed to one subnet and some to the other, there are two Call Admission Control domains operating independently. Specifically,

Copyright © 2003-2010 Nortel Networks. All Rights Reserved.

if both specified a limit of seven calls for each AP, it is possible to have seven calls admitted by each WLAN IP Telephony Manager 2245 on the same AP—therefore, the AP is oversubscribed by 2:1.

If multiple subnets are required, the best way to support them is to leverage the Layer 3 WLAN IP Telephony Manager 2245 design. With this design, the WLAN IP Telephony Manager 2245 units are clustered in one subnet and the traffic from the handset is routed from the appropriate WLAN IP Telephony Manager 2245 unit in the cluster. Although this is a supported configuration, all the engineering guidelines for latency, jitter, and packet loss must still be maintained. The Layer 3 design guidelines for having clients and WLAN IP Telephony Manager 2245 in different subnets does not mean that the WLAN IP Telephony Manager 2245 clustermaster and slavescan also be separated by routers. All the WLAN IP Telephony Manager 2245 units in the cluster must still be collocated in the same subnet.

WLAN handsets

The WLAN Handsets 2210/2211/2212/6120/6140 support both G.711 and G.729 codecs, but only using a 30 ms packetization rate.

The WLAN IP Telephony Manager 2245 translates between packetization rates, meaning that from the WLAN IP Telephony Manager 2245 to the handset, the call uses the packetization rate specified by the Communication Server 1000 (for example, 20 ms). Nortel recommends that the Communication Server1000 paketization rate match the 2245 at 30ms. For BCM, the packetization rate must be 30ms.

The handsets encapsulate their voice payloads in SVP for QoS. The handsets further synchronize communications, so that the handsets are able to avoid collisions with each other more effectively than the usual 802.11 collision avoidance mechanisms. Each handset maintains a list of up to four APs as potential candidates for roaming. The handsets are aggressive in roaming to other APs, which tends to prevent them from using a suboptimal data rate when another AP can provide better service. The handsets also communicate with the WLAN IP Telephony Manager 2245 and discover which APs are at full call capacity, so that the handsets can direct their calls through an AP that has call capacity available.

Under optimal conditions, meaning no interference and all devices in proximity of the AP, up to 10 voice calls from a handset are supported on a single AP 2330. When configuring the maximum call parameter of a WLAN IP Telephony Manager 2245, never configure it above 10. A more realistic rule of thumb that allows for devices to move about and rate scale accordingly is anywhere from six to eight calls per AP. A noisy RF environment can impact the numbers further.

Copyright © 2003-2010 Nortel Networks. All Rights Reserved.

To provide data devices some amount of guaranteed bandwidth, lower the maximum voice calls per AP to prevent voice calls from consuming all available throughput. For example, limiting the maximum calls per AP to seven allows data traffic to reserve up to 30 per cent of media capacity. If the network supports other handset calls on the 802.11b network, you must leave adequate capacity for those calls too. Note that the call admission control function of the WLAN IP Telephony Manager 2245 cannot serve to limit those other voice calls on a per-AP basis.

There is an alternative control on the WLAN IP Telephony Manager 2245 that affects call capacity across APs. This control allows the WLAN IP Telephony Manager 2245 to fix the data rates that handsets use. The options are Automatic and 1 Mb/2 Mb only. When you choose the latter, maximum call capacity drops by slightly more than half if G.711 is in use, or by slightly more than two-thirds if G.729 is in use. Most of the variability of call capacity is removed as rate scaling effects are eliminated. Therefore, you can get more predictable call capacity at the expense of maximum number of calls under optimum conditions. Note that with this option enabled, throughput for 802.11b data devices is severely impacted by even one or two voice calls.

If the automatic option to have higher potential capacity is selected, there is a risk of occasionally being oversubscribed under the worst conditions. For example, if eight calls is the configured limit on the WLAN IP Telephony Manager 2245, and if all eight calls are from handsets on the edge of coverage, the cell is oversubscribed. If five calls is the configured limit and handsets are restricted to 1 Mb/2 Mb, capacity is wasted when most handsets are close that could otherwise be used by other data devices.

To gain this type of predictability, engineer the maximum calls per AP based on 1 Mb/2 Mb rate selections in the handsets, configure that number as the call limit on the WLAN IP Telephony Manager 2245, and then configure the actual rate of the handsets (on the WLAN IP Telephony Manager 2245) to Automatic. That way, the WLAN is engineered for the worst case, but in optimal conditions, more throughput is left over for other devices to use, because the handsets use higher data rates.

To summarize, do not use the 1 Mb/2 Mb option, even if the network is engineered to that type of coverage.

Gateway and timing function

WLAN IP Telephony Manager 2245 units provide both the connection or gateway to the Call Server for the wireless handsets, and the timing function for active calls. This gateway function is distributed across the WLAN IP Telephony Manager 2245 group.

Copyright © 2003-2010 Nortel Networks. All Rights Reserved.

The number of active WLAN IP Telephony Manager 2245 units is determined dynamically. Whenever a WLAN IP Telephony Manager 2245 is added to or removed from the system, the distribution of timing function for active calls, as well as the gateway function, is affected.

Roaming and handover

Roaming is the ability of the wireless handset to go anywhere in the WLAN Extended Service Set RF signal coverage area, and to make and receive calls. Handover is the ability of the wireless handset to maintain an active call without interruption while moving within a WLAN Extended Service Set (ESS) RF signal coverage area of a WLAN. This means that the wireless handset hands over the WLAN RF signal from AP to AP without interrupting the data stream.

Access points on the same subnet

The handset can perform handover and roaming across SVP-compliant APs that reside on the same subnet as the wireless handset and WLAN IP Telephony Manager 2245 group.

Mobility across different subnets when using DHCP

If a WSS is not in use and the wireless handset IP address is acquired through DHCP, the wireless handset must be powered down and powered up when entering a new subnet. This enables functionality of the wireless handset when entering the WLAN RF signal coverage area of a different WLAN IP Telephony Manager 2245 group on a different subnet. After the wireless handset establishes communication within the Extended Service Set Identifier (ESSID) of the new WLAN, obtains another IP address from the DHCP server, and checks in with the group master, normal functionality returns. If the wireless handset is configured to use ESSID of the new WLAN, it automatically discovers the ESSID of the APs operating in broadcast mode.

Table 10 "Roaming and handover capabilities summary" (page 76) summarizes the capabilities.

Table 10
Roaming and handover capabilities summary

IP address	WSS in use	Roaming capability	Handover capability
Static	No	No	No
Static	Yes	Yes	Yes
DHCP	No	Yes, if the wireless handset is power-cycled between subnets.	No
DHCP	Yes	Yes	Yes

Copyright © 2003-2010 Nortel Networks. All Rights Reserved.

Multicast

IP multicast addresses are used by the WLAN Handset 2211 and the WLAN IP 6120 Handset Push-to-talk (PTT) feature. The use of IP multicast addresses requires that multicasting be enabled on the Layer 2 switch used by the defined group (WLAN IP Telephony Manager 2245 unitsmaster and slaves and wireless handsets).

Routers are typically configured with filters to prevent multicast traffic from flowing outside of specific domains. The wireless LAN can be placed on a separate VLAN or subnet to reduce the effects of broadcast and multicast traffic from devices in other network segments.

Placement guidelines for the WLAN IP Telephony Manager 2245

To reduce the impact that jitter, delay and packet loss has on voice quality, proper placement of the WLAN IP Telephony Manager 2245 is critical. See Figure 12 "Maximum delay, jitter and packet loss" (page 78). The WLAN IP Telephony Manager 2245 provides three critical functions to help achieve exceptional voice quality over WLAN:

- Timing
- Quality of Service (QoS)
- Connection Admission Control

Before adding the WLAN IP Telephony Manager 2245 to the network:

- Ensure that the APs used in the network are Voice Interoperability for Enterprise Wireless (VIEW) certified. For more information, go to www.spectralink.com/consumer/partners/view_certification.jsp.
- Ensure that the handsets are running Nortel Phase II software (97.070 or greater).

Copyright © 2003-2010 Nortel Networks. All Rights Reserved.

Figure 12
Maximum delay, jitter and packet loss

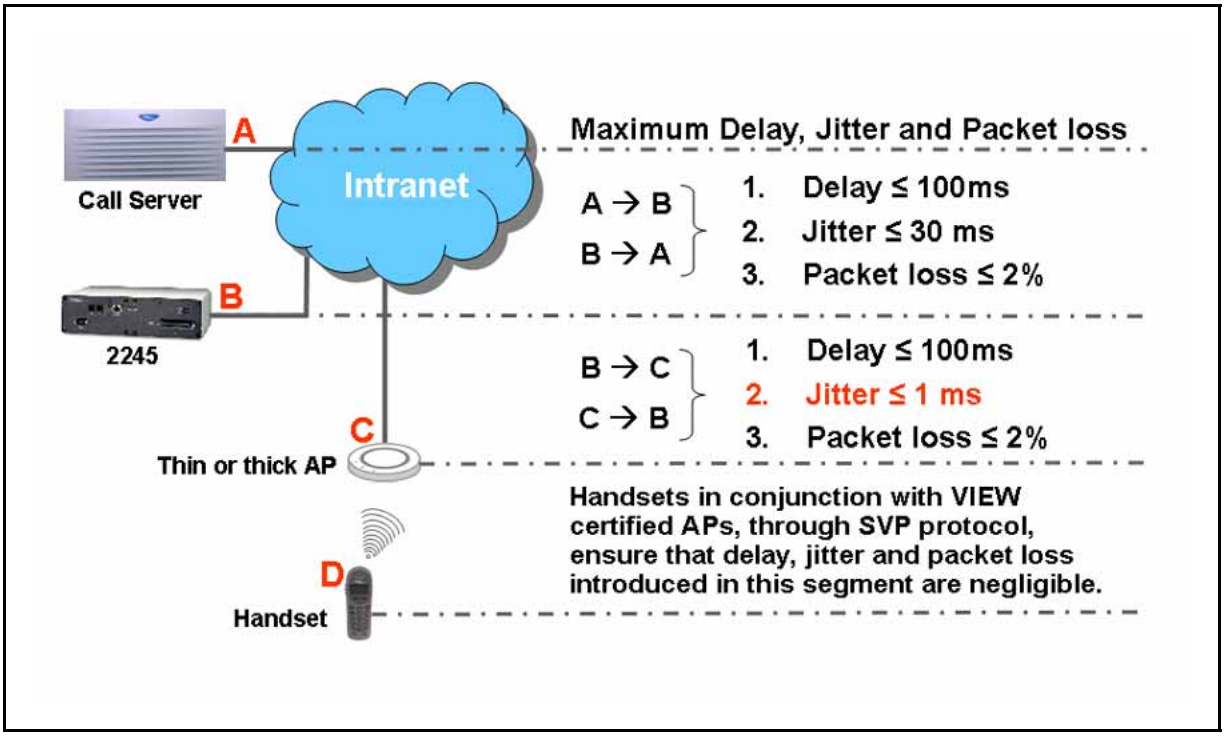

Strict timing requirements dictate that the WLAN IP Telephony Manager 2245 must be placed as close as possible to the handsets, ideally in the same subnet.

End-to-end jitter, delay and packet loss budget is a general VoIP best practice:

- End-to-end delay is the time it takes for voice to go from the microphone of the sending telephone to the earpiece of the receiving telephone.
- End-to-end jitter must not exceed 30 ms north of the WLAN IP Telephony Manager 2245 (PBX to the WLAN IP Telephony Manager 2245) and must not exceed 1 ms south of the WLAN IP Telephony Manager 2245 (the WLAN IP Telephony Manager 2245 to the AP).
- End-to-end packet loss is the number of packets that are lost in the network.

To achieve excellent voice quality, Nortel recommends using G711 CODEC with the following configuration:

- End-to-end delay < = 150 ms (one way)
- Packet loss < = 0.5%
- The maximum jitter buffer for the handsets set as low as possible.

Copyright © 2003-2010 Nortel Networks. All Rights Reserved.

For more information, see *Converging the Data Network with VoIP Fundamentals (NN43001-260)*.

The jitter budget for the link south of the WLAN IP Telephony Manager 2245 ensures that packets arrive at the handset within the 30 ms arrival window. The evenly spaced packet flow on the outbound side of the WLAN IP Telephony Manager 2245 allows the handset to conserve battery life by not using extra battery power to wait for late arriving packets. It also allows efficient roaming while the handset moves from one AP coverage area to another. See Figure 13 "Jitter removal for packets going to the AP" (page 79).

Figure 13
Jitter removal for packets going to the AP

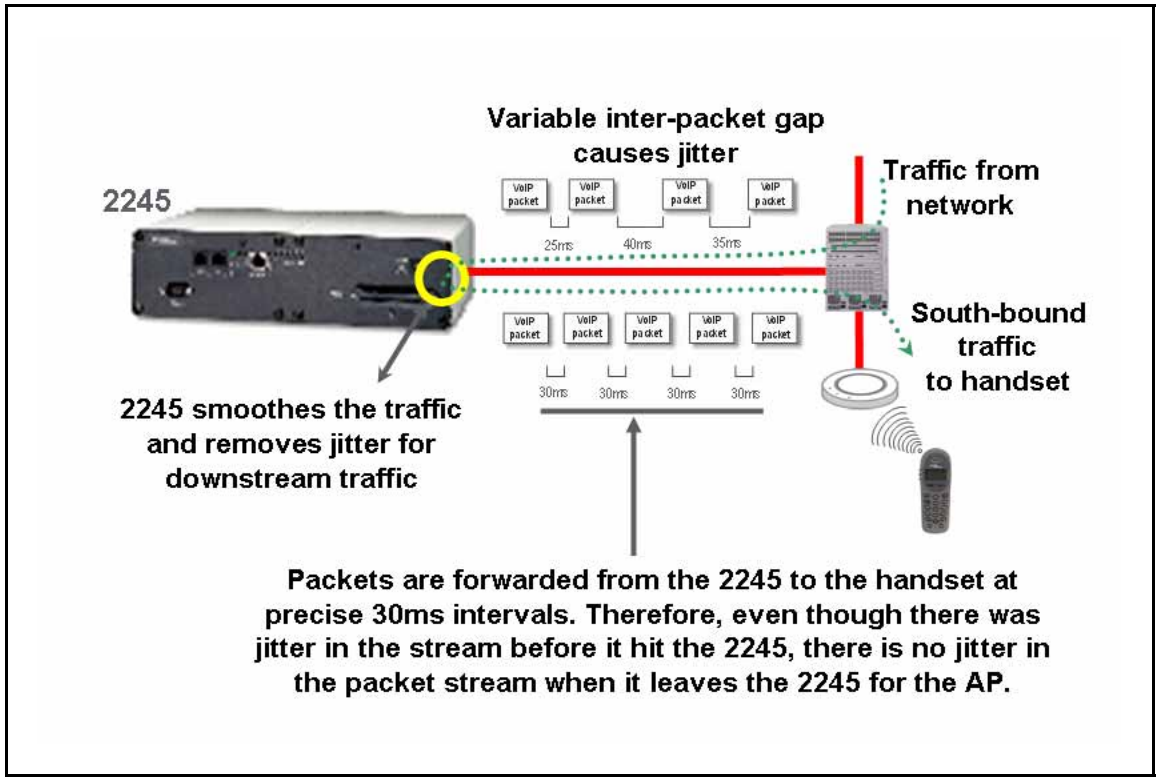

The following figures describe end-to-end delay for differing topologies:

- For an example of an end-to-end delay for a LAN, see Figure 14 "Example 1: End-to-end delay and packet loss for a LAN" (page 80).
- For an example of an end-to-end delay for a WAN, see Figure 15 "Example 2: End-to-end delay and packet loss for a WAN" (page 80).
- For an example of an end-to-end delay for a LAN to a Public Switched Telephone Network (PSTN), see Figure 16 "Example 3: End-to-end delay and packet loss for a LAN to a PSTN" (page 81).

Copyright © 2003-2010 Nortel Networks. All Rights Reserved.

Figure 14
Example 1: End-to-end delay and packet loss for a LAN

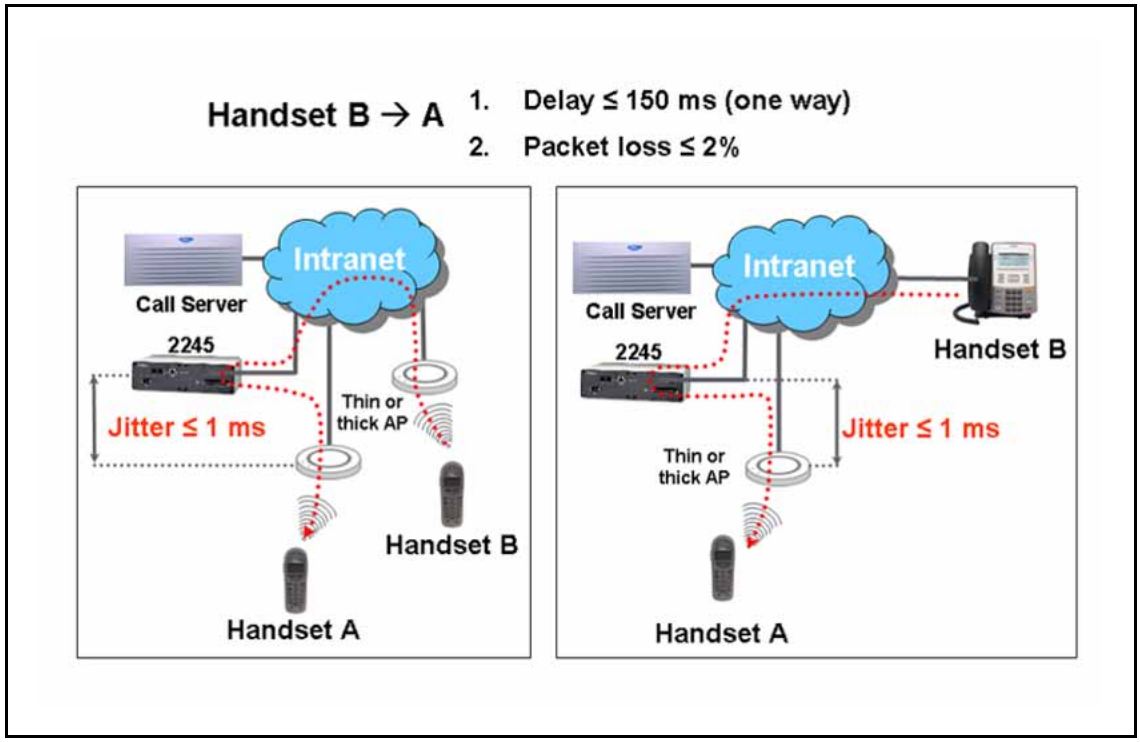

Figure 15
Example 2: End-to-end delay and packet loss for a WAN

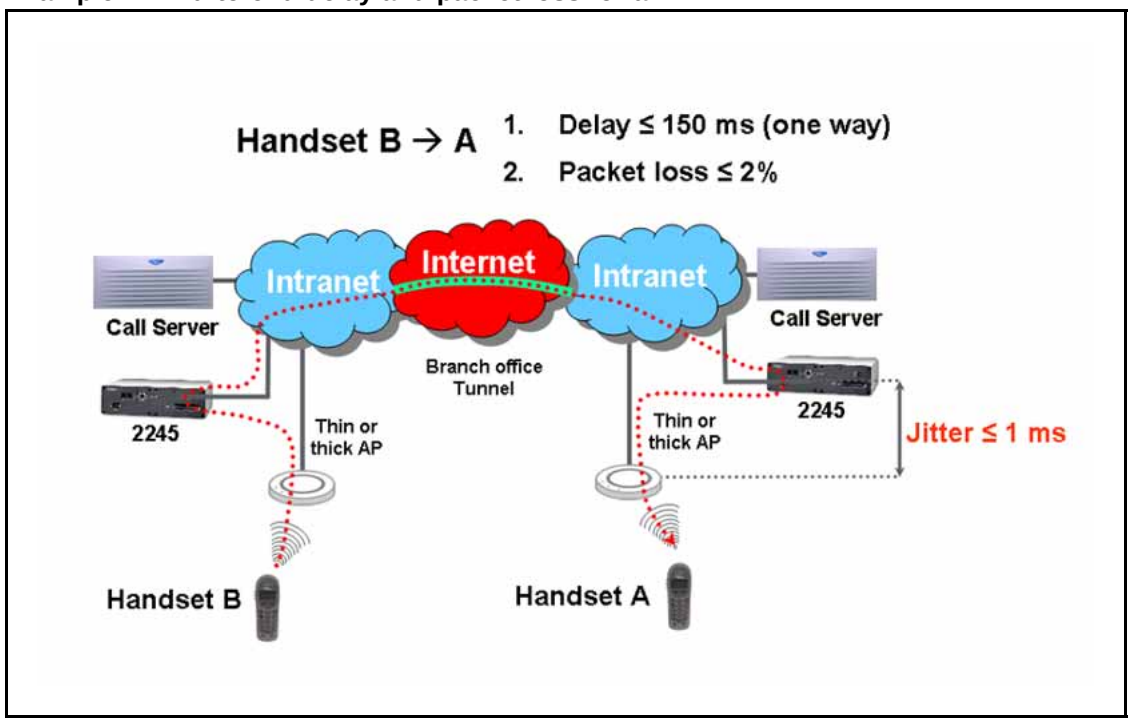

Copyright © 2003-2010 Nortel Networks. All Rights Reserved.

Figure 16
Example 3: End-to-end delay and packet loss for a LAN to a PSTN

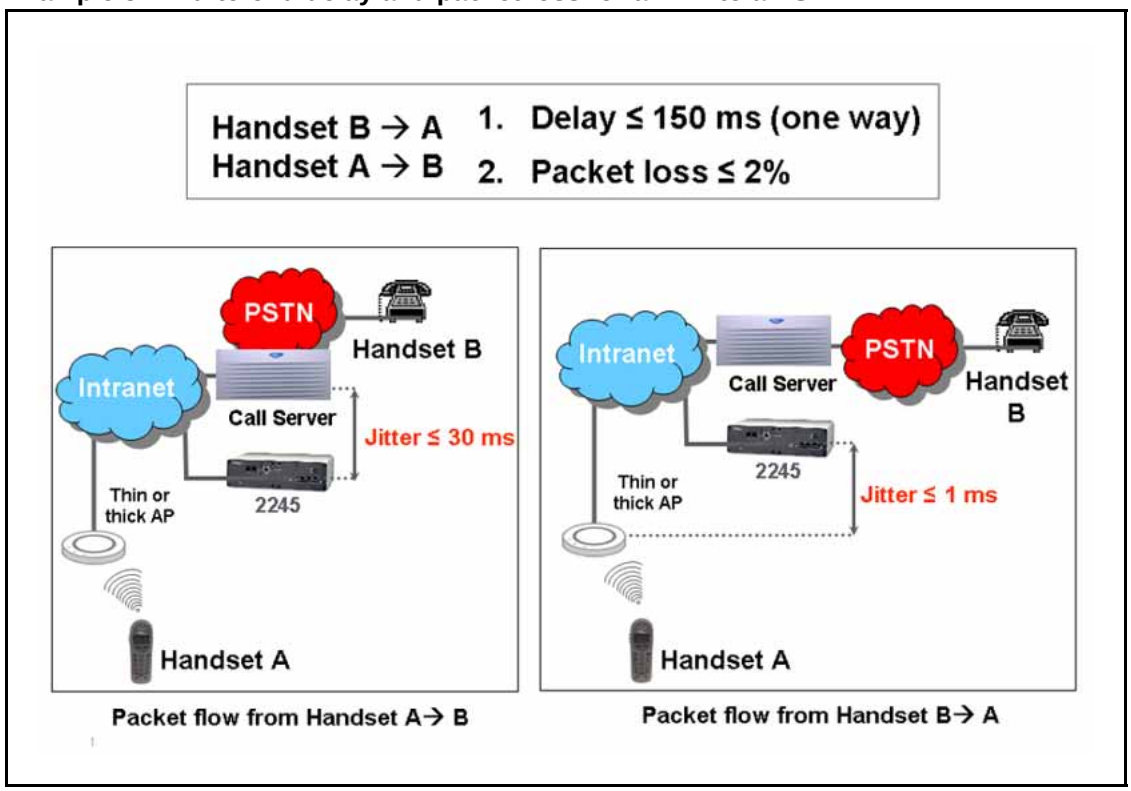

Use the following tools to measure jitter, delay and packet loss:

- Ping (to estimate delay and packet loss)
- Netmeeting (to generate RTP traffic)
- Ethernet (to capture and analyze the RTP traffic)

For more information, see Figure 17 "Measuring jitter, delay and packet loss" (page 82) and Procedure 1 “Measuring jitter, delay, and packet loss” (page 82).

Copyright © 2003-2010 Nortel Networks. All Rights Reserved.

Figure 17
Measuring jitter, delay and packet loss

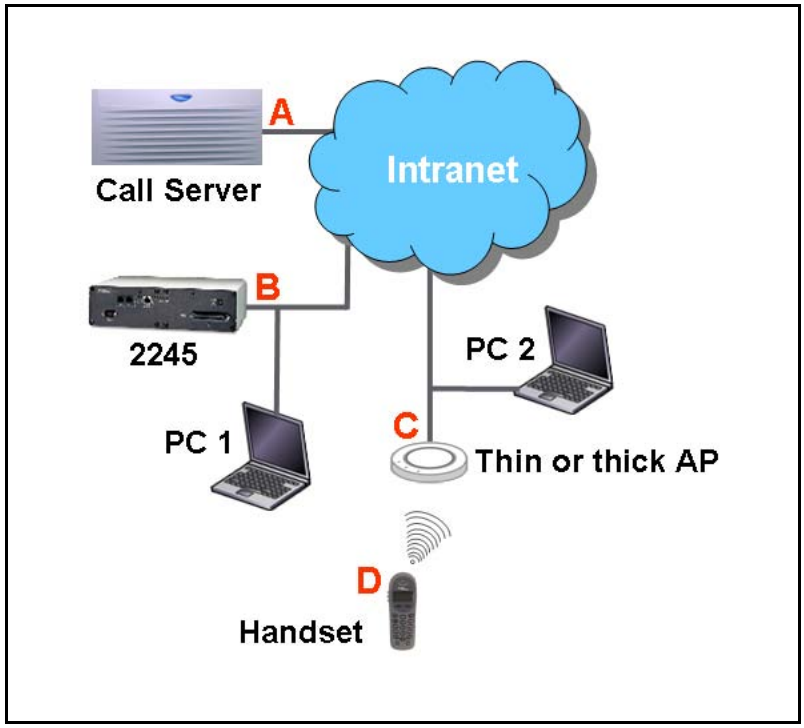

Procedure 1
Measuring jitter, delay, and packet loss

Step	Action
1	Connect PC 2 to LAN segment C.
2	Obtain the IP address of PC 2.
3	Start Netmeeting.
4	Connect PC 1 to the LAN on segment B.
5	Ping PC 2 and note the length of the round-trip delay.
6	Start Ethernet and capture packets on the correct interface.
7	Configure a filter for RTP packets.
8	Start a Netmeeting session on PC 2.
9	End the Netmeeting session and stop the packet capture.
10	Save the file and analyze the trace to make sure that the jitter, delay, and packet loss are within specifications.
11	Move PC 2 to segment A and repeat Step 1 to Step 10.

--End--

Copyright © 2003-2010 Nortel Networks. All Rights Reserved.

For an example of packet stream analysis for jitter and packet loss, see Figure 18 "Part 1: Example of analysis of a packet stream captured between segment A and B" (page 83) and Figure 19 "Part 2: Example of analysis of a packet stream captured between segment A and B" (page 84).

Figure 18
Part 1: Example of analysis of a packet stream captured between segment A and B

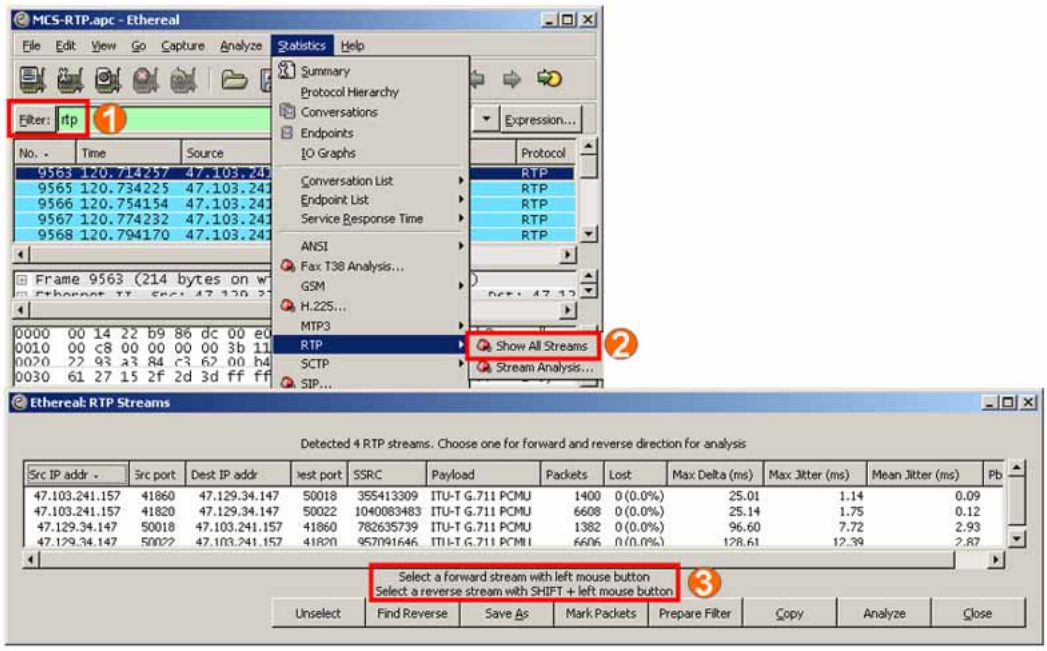

Copyright © 2003-2010 Nortel Networks. All Rights Reserved.

Figure 19
Part 2: Example of analysis of a packet stream captured between segment A and B

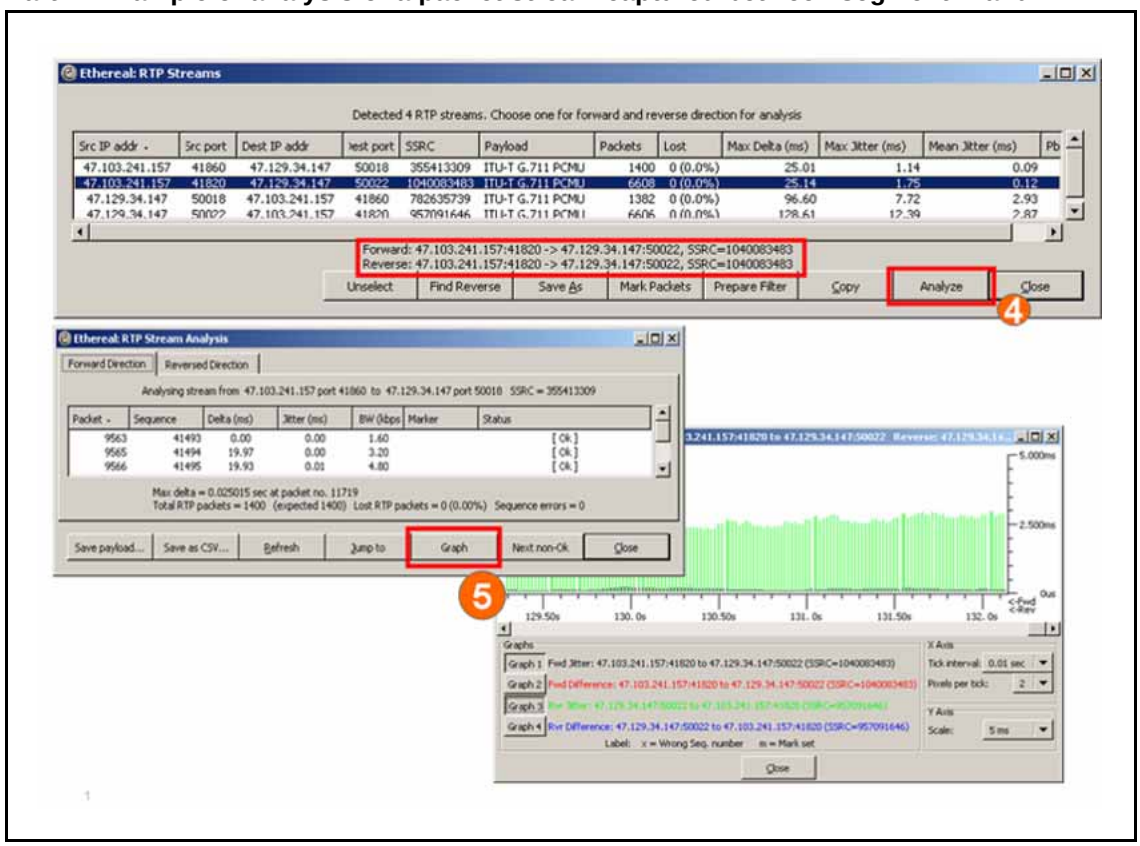

Usually the WLAN IP Telephony Manager 2245 is placed in the same subnet as WLAN handsets. This was previously a rule, but it is now just a recommendation. The WLAN IP Telephony Manager 2245 sometimes must be placed in a different subnet from the handsets. However, the rules for delay, jitter, and packet loss still apply.

Ethernet connectivity between the WLAN IP Telephony Manager 2245 and the call server, or other voice endpoint, must never exceed 100 milliseconds (ms) of one-way delay, 30 ms of jitter, and 2% packet loss end to end regardless of the physical properties of the link. Whether the WLAN IP Telephony Manager 2245 is in the same subnet with handsets, the link between the WLAN IP Telephony Manager 2245 and the handset must be under 100 ms of one-way delay, 1 ms of jitter and under 2% packet loss.

WLAN Application Gateway 2246 planning

The optional WLAN Application Gateway 2246 requires a 10 Mbs half-duplex switched Ethernet connection.

Copyright © 2003-2010 Nortel Networks. All Rights Reserved.

WLAN IP Telephony Manager 2245 and WLAN Application Gateway 2246 installation requirements

Locate the WLAN IP Telephony Manager 2245 and optional WLAN Application Gateway 2246 in a space with:

- sufficient backboard mounting space and proximity to the LAN access device (switched Ethernet switch), Call Server, and power source
- rack-mount unit (if using)
- easy access to the front panel, which is used for cabling
- for the WLAN Application Telephony Gateway 2246, a maximum distance of 325 feet (100 meters) from the Ethernet switch
- for the WLAN IP Telephony Manager 2245, a maximum distance of 325 feet (100 meters) from the Ethernet switch

IP address planning

The WLAN IP Telephony Manager 2245, the optional WLAN Application Gateway 2246, and each of the wireless handsets and APs associated with them, requires an IP address.

ATTENTION

The master WLAN IP Telephony Manager 2245 must have an IP address statically configured.

If using DHCP for the rest of the network, the DHCP Server must have the static IP address of the master WLAN IP Telephony Manager 2245 configured on it. If using DNS, the DNS Server must have the static IP address of the master WLAN IP Telephony Manager 2245 configured on it.

The wireless handsets can be configured to use DHCP or can be assigned a static IP address . If there is no DHCP Server, the system administrator must determine what IP addresses are to be used for static addressing. As well, whether static IP addressing or DHCP is used, a pool of alias IP addresses must be configured on the WLAN IP Telephony Manager for the use of the wireless handsets. Ensure that the pool of alias IP addresses is reserved exclusively for the use of the wireless handsets.

For information about configuring a static IP address on a WLAN IP Telephony Manager 2245, see “WLAN IP Telephony Manager 2245 configuration” (page 133). For information about configuring a static IP address for a WLAN Application Gateway 2246, see “Configuring the WLAN Application Gateway 2246 IP address” (page 200). For information about configuring a static IP address on the handsets, see *WLAN Handsets Fundamentals (NN43001-505)*. For information about assigning IP addresses to the APs, see the vendor-specific documentation.

Copyright © 2003-2010 Nortel Networks. All Rights Reserved.

Record the static IP address assignments and store them in a safe place.

IP addressing with DHCP

A pool of alias IP addresses must be configured on the WLAN IP Telephony Manager 2245 for the use of the wireless handsets. The use of a 22-bit subnet mask provides IP addresses for approximately 500 wireless handsets (1024 nodes). Allocate a pool of an equal number of IP addresses on the DHCP server for the wireless handsets.

For example:

142.223.204.1 to 142.223.205.254 are allocated on the DHCP Server for the use of the wireless handsets.

142.223.206.1 to 142.223.207.254 are configured on the WLAN IP Telephony Manager for IP aliases for the wireless handsets.

Ensure that all these IP addresses are reserved on the DHCP Server for the use of the wireless handsets and not assigned to any other device.

Planning worksheets

Complete this worksheet and the worksheet in Table 12 "Wireless handset planning worksheet" (page 87) before beginning the installation.

Copy and complete this worksheet in Table 11 "WLAN IP Telephony Manager 2245 planning worksheet" (page 86) for each WLAN IP Telephony Manager 2245. Obtain the necessary information from the network administrator.

Table 11
WLAN IP Telephony Manager 2245 planning worksheet

Unit number	
IP address	
Hostname	
Subnet Mask	
Default Gateway	
Master WLAN IP Telephony Manager 2245	
WLAN IP Telephony Manager 2245	
TFTP Download Master IP address	
Primary DNS Server IP address	

Copyright © 2003-2010 Nortel Networks. All Rights Reserved.

Table 11
WLAN IP Telephony Manager 2245 planning worksheet (cont'd.)

Secondary DNS Server IP address	
DNS Server	
DNS Domain	
WINS Server IP address	
Workgroup name	
Syslog Server IP address	
First alias IP address	
Last alias IP address	

Copy and complete the worksheet from Table 12 "Wireless handset planning worksheet" (page 87) to maintain a configuration record for the handsets.

Table 12
Wireless handset planning worksheet

Line *	MAC Address *	User Name	Dialing Ext.	IP Address (if statically configured)
1				
2				
3				
4				
5				
6				
7				
8				
9				
10				
11				
12				
13				
14				
15				
16				
***—required only if using the optional WLAN Application Gateway 2246.**				

Copyright © 2003-2010 Nortel Networks. All Rights Reserved.

Table 12
Wireless handset planning worksheet (cont'd.)

Line *	MAC Address *	User Name	Dialing Ext.	IP Address (if statically configured)
17				
18				
***—required only if using the optional WLAN Application Gateway 2246.**				

Copyright © 2003-2010 Nortel Networks. All Rights Reserved.

System information

This chapter contains information about the following topics:

- “Bandwidth management” (page 89)
- “Codecs” (page 92)
- “Jitter buffer” (page 92)
- “RLR and SLR” (page 92)
- “RTCP” (page 93)
- “Gain adjustment” (page 93)
- “Programmable rings and tones” (page 93)
- “Virtual Office” (page 93)
- “Branch Office” (page 93)
- “Survivable Remote Gateway” (page 94)
- “External Applications Server” (page 95)
- “End-to-end QoS” (page 95)
- “NAT” (page 95)
- “Communication Server 1000 features” (page 102)
- “IP Phone 2004 features” (page 102)

Bandwidth management

The existing Communication Server 1000 Release 5.0 software bandwidth management mechanism using bandwidth zones applies to the handsets.

Zones

A WLAN IP Telephony Manager 2245 group consists of a master WLAN IP Telephony Manager 2245, zero to 15 WLAN IP Telephony Manager 2245 slaves, and their associated wireless handsets.

Copyright © 2003-2010 Nortel Networks. All Rights Reserved.

A WLAN IP Telephony Manager 2245 group consists of a 0 to 15 WLAN IP Telephony Manager 2245 units, and their associated wireless handsets.

It is good practice to create a Bandwidth Management Zone for each WLAN IP Telephony Manager 2245 group (one group per subnet) in LD 117. Use the **CHG ZDES** command to name the zone with the IP address of the master WLAN IP Telephony Manager 2245.

=> NEW ZONE <zone number>

=> CHG ZDES <zone number> <Wnnn.nnn.nnn.nnn>

where

W indicates WLAN IP Telephony Manager 2245 and **nnn.nnn.nnn.nnn** is the IP address of the master WLAN IP Telephony Manager 2245.

=> PRT ZDES ALL

This allows the system administrator or support personnel to print a list of the IP addresses of all the master WLAN IP Telephony Manager 2245 units in the system simply by printing the Zone designators in LD 117. They are printed as Wnnn.nnn.nnn.nnn. This enables support personnel to easily obtain the IP address of a WLAN IP Telephony Manager 2245 so they can telnet to the WLAN IP Telephony Manager 2245 in order to diagnose and correct problems.

Zones for wireless handsets

Assign the virtual line TNs for the wireless handsets (configured in LD 11) to the zone number assigned to its home WLAN IP Telephony Manager 2245 group. Using LD 117, this enables support personnel to list the current registration status of all wireless handsets that belong to the zone of a specific WLAN IP Telephony Manager 2245 group.

=> STIP ZONE <zone number>

All wireless handsets currently registered (checked in) with their home WLAN IP Telephony Manager 2245 group is listed. The format of the list is **TERMIP = <alias IP address>**, which is located in the same subnet as the IP address of the master WLAN IP Telephony Manager 2245 of the group . Any wireless handsets that are currently checked in with another WLAN IP Telephony Manager 2245 group are listed with a TERMIP in a different subnet from that of their home WLAN IP Telephony Manager 2245 group ZDES.

Current registration status of wireless handsets

To list the current registration status of all wireless handsets that are registered in a specific subnet, regardless of their home zone, use either of the following LD 117 commands.

Copyright © 2003-2010 Nortel Networks. All Rights Reserved.

```
STIP TERMIP <subnet of the WLAN IP Telephony Manager 2245 group>
```

OR

```
PRT IPDN <subnet of the WLAN IP Telephony Manager 2245 group>
```

Alias IP address

Using the DN of a wireless handset, support personnel can obtain the current or most recent alias IP address used by a wireless handset when it checked in with the master of a WLAN IP Telephony Manager 2245 group, and subsequently registered with the LTPS and Call Server.

```
=> PRT DNIP <DN of wireless handset>
```

Wireless telephone type designation

Unless there is another preferred use for the DES (Designator) prompt in LD 11, Nortel recommends using the DES prompt to indicate the type of WLAN Handset—either type 2210, 2211, 2212, or 6120—for the 2004P1 or the 2004P2 type of virtual line TN. This allows support personnel to enter 2210, 2211, 2212 or 6120 at the LD 20 DES prompt and receive a list of handsets that are configured on the Call Server.

Call blocking

The WLAN IP Telephony Manager 2245 controls the media stream and blocks calls due to bandwidth constraints on any AP without notifying the Call Server.

- The WLAN IP Telephony Manager 2245 can be configured with the maximum number of simultaneous calls allowed on a single AP.
- On an incoming call for a wireless handset associated with a full AP, the caller hears ringback and the Call Forward No Answer (CFNA) treatment is applied, such as forwarding the call to voice mail. The called party is not notified of the incoming call.
- If the call originates from a wireless handset that is on a bandwidth-restricted AP, the caller hears a warning tone and the call is blocked.
- If a wireless handset moves into an area serviced by an AP that is already at capacity, the wireless handset does not associate with the new AP. Instead, the wireless handset attempts to remain associated with an AP that has sufficient bandwidth. This could result in packet loss, degraded signal and voice quality, and a call could be dropped.
- UNIStim signaling, such as watchdog updates or lamp audit, are not affected by the bandwidth constraint.

Copyright © 2003-2010 Nortel Networks. All Rights Reserved.

Codecs

G.711, G.729A, and G.729B codecs are supported. The RTP packets that transit between the wireless handsets and the WLAN IP Telephony Manager 2245 always contain 30 ms of voice. The WLAN IP Telephony Manager 2245 repackages the voice data to the correct packet size. The jitter buffer is always configured to 70 ms, and any UNIStim messages that configure the jitter buffer are ignored.

ATTENTION
If the wireless handset is registered to the same LTPS as the IP Phones, configure only the subset of codecs supported by both the wireless handsets and the IP Phones.

If it is necessary for the IP Phone to use a codec that is not supported on the wireless handsets, such as G.723.1, the wireless handsets must be configured on their own separate node.

If a remote endpoint is configured for G.723.1 as the Best Bandwidth (BB) Codec and G.711 as the Best Quality (BQ) Codec, (G.729 is not configured), the media path negotiates to G.711. The result can be unexpected consequences on a narrow-band link.

Jitter buffer

The handsets do not support a configurable jitter buffer. If they receive the Jitter Buffer Configuration UNIStim message, the command is ignored. The jitter buffer is fixed at 70 ms.

There are two implications of a fixed jitter buffer setting:

- If the system jitter buffer setting is less than 70 ms (default is 50 ms), there is a slightly longer delay in the IP Phone receive direction.
- If the system jitter buffer setting is longer than 70 ms to accommodate severe network jitter, there could be slightly higher packet loss in the IP Phone receive direction.

The longer than normal jitter buffer setting is reasonable since extra jitter is introduced by the RF portion of the link.

RLR and SLR

The handsets do not support UNIStim messages used to adjust the Receive Loudness Rating (RLR) and Send Loudness Rating (SLR) of the wireless handset.

Copyright © 2003-2010 Nortel Networks. All Rights Reserved.

RTCP

Handsets do not support Real-time Transport Control Protocol (RTCP). Incoming RTCP packets sent to the wireless handsets are actually sent to the WLAN IP Telephony Manager 2245 and are discarded. If the wireless handset is queried for RTCP parameters, the wireless handset returns dummy values of 0 jitter, 0 latency, and 0 packet loss.

Gain adjustment

The handsets ignore any UNIStim messages that adjust the loss plan of the wireless handset.

Programmable rings and tones

The wireless handsets support alerting cadences but only a single alerting frequency.

The wireless handsets have the same call progress tone capability as the existing IP Phones 2004.

In/Out of Service tones

When the handset completes registration with the Call Server, it plays the In Service tone. When the handset loses connection with the Call Server and resets, it plays the Out of Service tone.

Virtual Office

The handsets support Virtual Office. For more information, see *Features and Services Fundamentals (NN43001-106)* and *IP Line Fundamentals (NN43001-500)*.

Branch Office

The handsets are supported in a branch office location using the Branch Office feature. Branch Office refers to the Media Gateway 1000B and the Survivable Remote Gateway (SRG). A WLAN IP Telephony Manager 2245 and supported APs must be installed at the branch office location. Branch office wireless handsets do not require wireless handset infrastructure in the main office.

The wireless handsets in a branch office configuration behave like an IP Phone 2004 in the Branch Office feature. The wireless handsets are administered in the same manner as the IP Phone 2004. The display on the wireless handsets is almost the same as the display on the IP Phone 2004, with one exception—the Local mode display.

Local mode display

The default state of the wireless handset is Standby. To determine whether the wireless handset is in Local mode, press the off-hook (Green) or the MENU keys on the WLAN Handset 2210/2211/2212 or the soft

Copyright © 2003-2010 Nortel Networks. All Rights Reserved.

keys and the Nav keys on the WLAN Handset 6120/6140. Pressing these keys changes the state of the handset to Active Idle or Active Off-Hook, therefore putting the handset in communication with the primary Signaling Server.

For the MG 1000B, if a wireless handset is registered to the Media Gateway in Local mode, the local-mode license information appears on the wireless handset on the second line of the display. Since the maximum number of display characters on the wireless handset is 19 characters, the local-mode license information about the wireless handset display is truncated. See Table 13 "IP Phone 2004 and handset Local mode license display (MG 1000B only)" (page 94).

Table 13
IP Phone 2004 and handset Local mode license display (MG 1000B only)

IP Phone 2004	Handset
Licensed days left x	Licensed days lft x
Licensed days left xx	Licensed ds lft xx
Beyond licensed period	Beyond licensd prd

For more information about Branch Office, see *Branch Office Installation and Commissioning (NN43001-314)*.

Survivable Remote Gateway

The handset can be deployed in a Survivable Remote Gateway (SRG) configuration for both SRG 1.0 and SRG50.

The handset supports Virtual Office in SRG for Normal mode. It is not supported in Local mode.

Test Local mode is not accessible because the Services key is not supported in Local mode.

The navigation keys are supported in Normal mode and not in Local mode.

Since the default state of the wireless handset is Standby, it is only possible to determine if the wireless handset is in Local mode by pressing the off-hook (Green) or MENU keys. Pressing these keys changes the state of the handset to Active Idle or Active Off-Hook, therefore putting it in communication with the primary Signaling Server in the main office.

Copyright © 2003-2010 Nortel Networks. All Rights Reserved.

ATTENTION
In order to allow SRG 1.0 systems based on BCM 3.6, to correctly operate with the handsets, they must have a software patch installed. The patch can be downloaded from the Nortel Electronic Software Delivery Web site.The BCMSRG 3.6 WLAN IP Telephony Feature patch is called BCM_360[1].039__WLAN_IP_Telephony_Patch.exe, which includes 51 files required for automated patch installation.

SRG 1.0 based on BCM 3.7 or SRG50 systems do not require a patch.

For more information about SRG, see *Main Office Configuration Guide for Survivable Remote Gateway 50 (NN43001-307)*.

External Applications Server

The External Applications Server (XAS) applications are not available on the handsets.

End-to-end QoS

End-to-end QoS, such as DiffServ, and Layer 2 QoS, such as 802.1 Qp, are not supported on the wireless telephone system. Any UNIStim commands sent to the wireless handsets attempting to adjust Layer 2 or Layer 3 QoS parameters are ignored.

However, the WLAN IP Telephony Manager 2245 can tag packets with a Differentiated Services Code Point (DSCP) tag. For more information, see "Quality of Service" (page 224). You can also provide QoS mechanisms through the configuration of network equipment.

The Layer 2 switch port to which the WLAN IP Telephony Manager 2245 is connected can be configured to add 802.1 Qp tagging. The Layer 3 port that acts as the gateway for the WLAN IP Telephony Manager 2245 can be configured to add the appropriate DiffServ tagging. Since all of the signaling and media traffic passes through the WLAN IP Telephony Manager 2245, all packets are tagged with the appropriate priority. If more than one WLAN IP Telephony Manager 2245 is used, each Layer 2 port to which a WLAN IP Telephony Manager 2245 is connected must be configured to add the 802.1 Qp tagging.

NAT

Handsets can be deployed in an Network Address Translation (NAT) environment.

This section describes important considerations that must be taken into account when using the handsets in a NAT environment. Failure to comply with or heed these considerations can result in wireless handset malfunction.

Copyright © 2003-2010 Nortel Networks. All Rights Reserved.

For detailed information about NAT and the NAT Traversal feature, see *IP Line Fundamentals (NN43001-500)*.

NAT Traversal feature

The NAT Traversal feature is used where the IP Phone (this includes the handsets) is located on the private side of the NAT router, while the rest of the Server resides on the public side.

To ensure correct deployment of the wireless handsets in this type of network configuration, most, if not all, of the WLAN equipment must reside on the private side of the NAT router.

Network configurations

The WLAN Handset 2212 has a VPN feature that enables an IPsec tunnel to a Nortel VPN Router, which is the only IPsec platform supported today. This feature alters some of the usual design recommendations for the telephony components, such as the WLAN IP Telephony Manager 2245. Usually, the WLAN IP Telephony Manager 2245 is placed in the same subnet with the handsets.

With the VPN feature enabled, the WLAN IP Telephony Manager 2245 now resides behind the VPN Router in a different subnet from the handsets; however, even though the same-subnet restriction has been lifted, it is still very important to locate the WLAN IP Telephony Manager 2245 as close to the handsets as possible. In this case, it is located immediately behind the VPN Router (and in the same subnet as the VPN Router). The VPN Router must also be located as close to the handsets as possible.

You can deploy the handsets behind a NAT router with no Security Switch, as shown in Figure 20 "VPN design over a Layer 2 network" (page 97). This configuration includes a Layer 2 switch, which can be any Layer 2 switch (for example, Nortel Ethernet Switch 450). No Layer 3 device, such as a router, can be located between the wireless handsets and the WLAN IP Telephony Manager 2245.

Copyright © 2003-2010 Nortel Networks. All Rights Reserved.

Figure 20
VPN design over a Layer 2 network

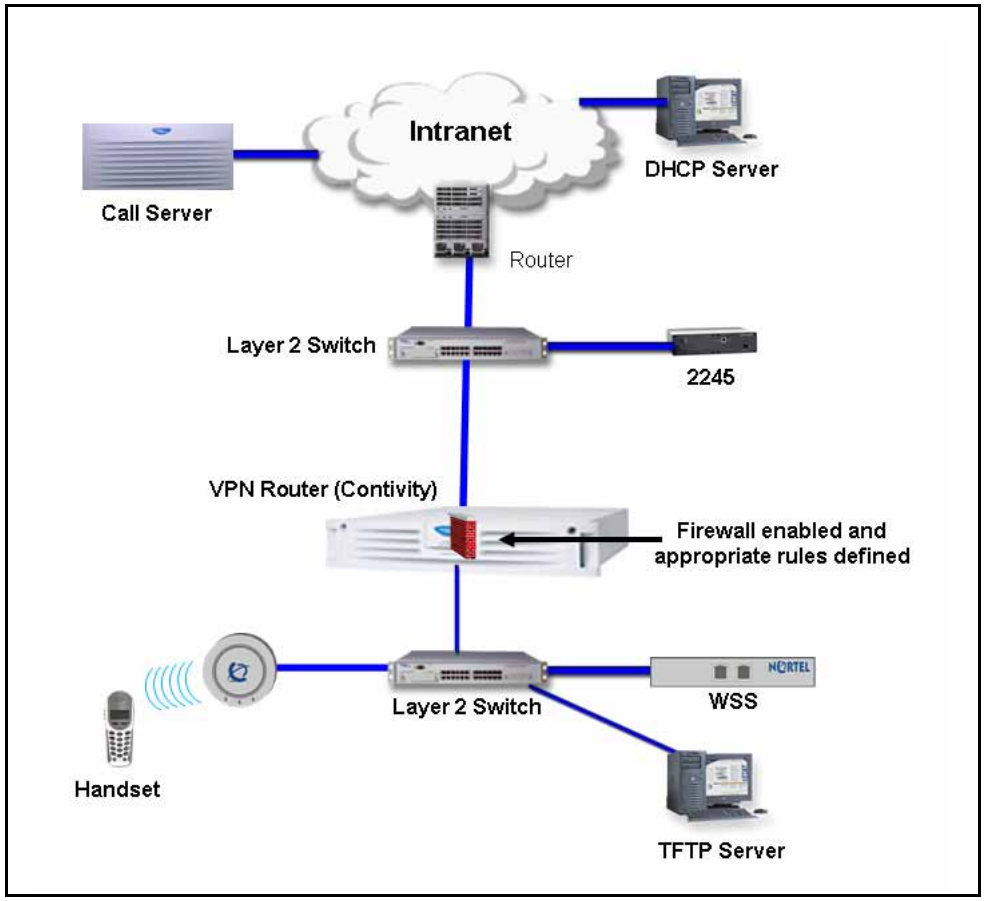

Copyright © 2003-2010 Nortel Networks. All Rights Reserved.

Figure 21
VPN design over a Layer 3 network

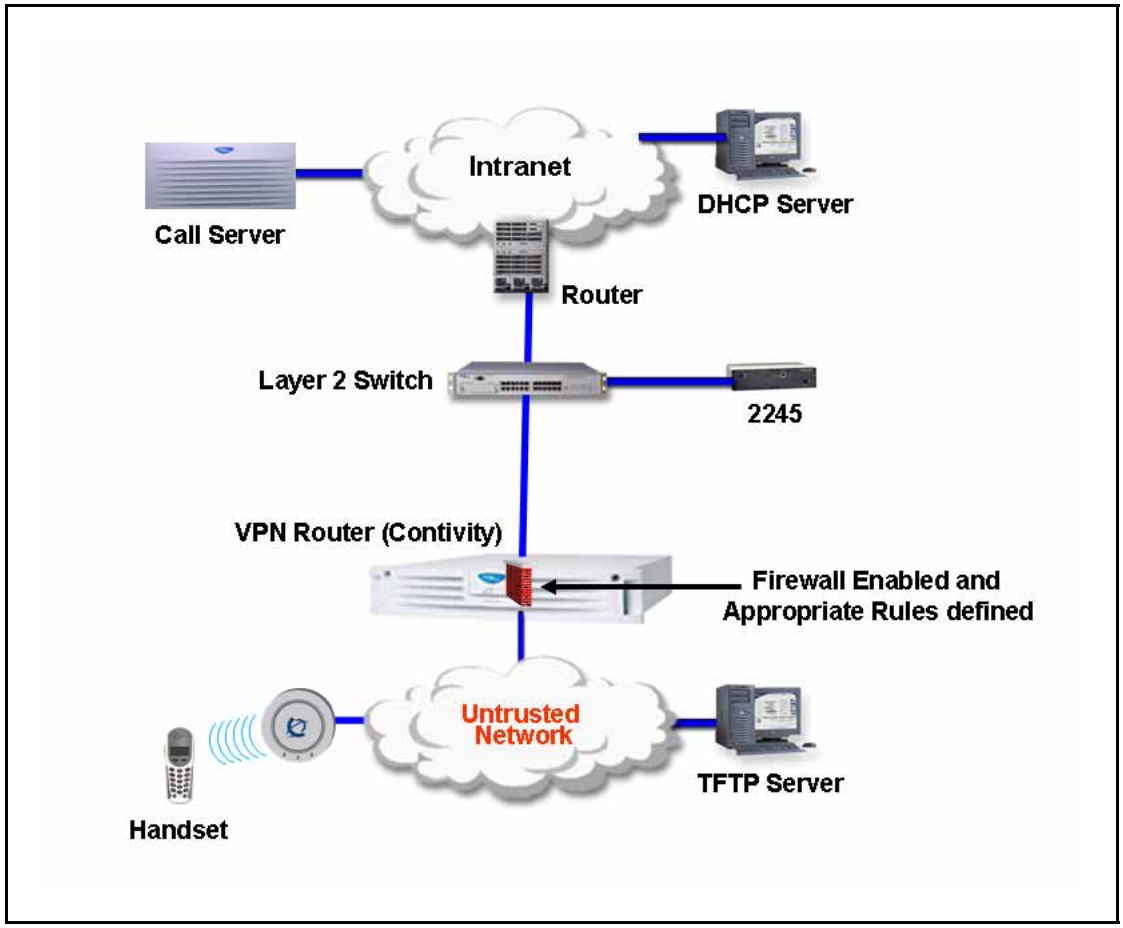

ATTENTION
If the WLAN IP Telephony Manager 2245 is not in the same subnet as the handsets, the handsets do not work.

ATTENTION
In Figure 20 "VPN design over a Layer 2 network" (page 97), Figure 21 "VPN design over a Layer 3 network" (page 98), Figure 22 "Not recommended VoWLAN design" (page 99), and Figure 23 "Network configuration 3 with Full DHCP Server" (page 101), the clouds can represent a corporate intranet or the public Internet.

Make the VPN Router public interface the default gateway for the handsets, and if not the direct gateway for clients, at least ensure that traffic comes from the WLAN into the public interface, not the private interface.

Copyright © 2003-2010 Nortel Networks. All Rights Reserved.

Connect the private interface of the VPN Router to the trusted side of the network. Make sure that client DHCP traffic flows through the VPN Router. If a network path around the VPN Router exists for the handsets to get DHCP assignments, the routing requirements on the VPN Router become much more complicated. To support such a scenario, you must configure static routes on the public interface as well as inject those routes into the routing protocol on the private interface. Therefore, Nortel recommends that you do not use the network design shown in Figure 22 "Not recommended VoWLAN design" (page 99) as a design for the VPN feature.

Figure 22
Not recommended VoWLAN design

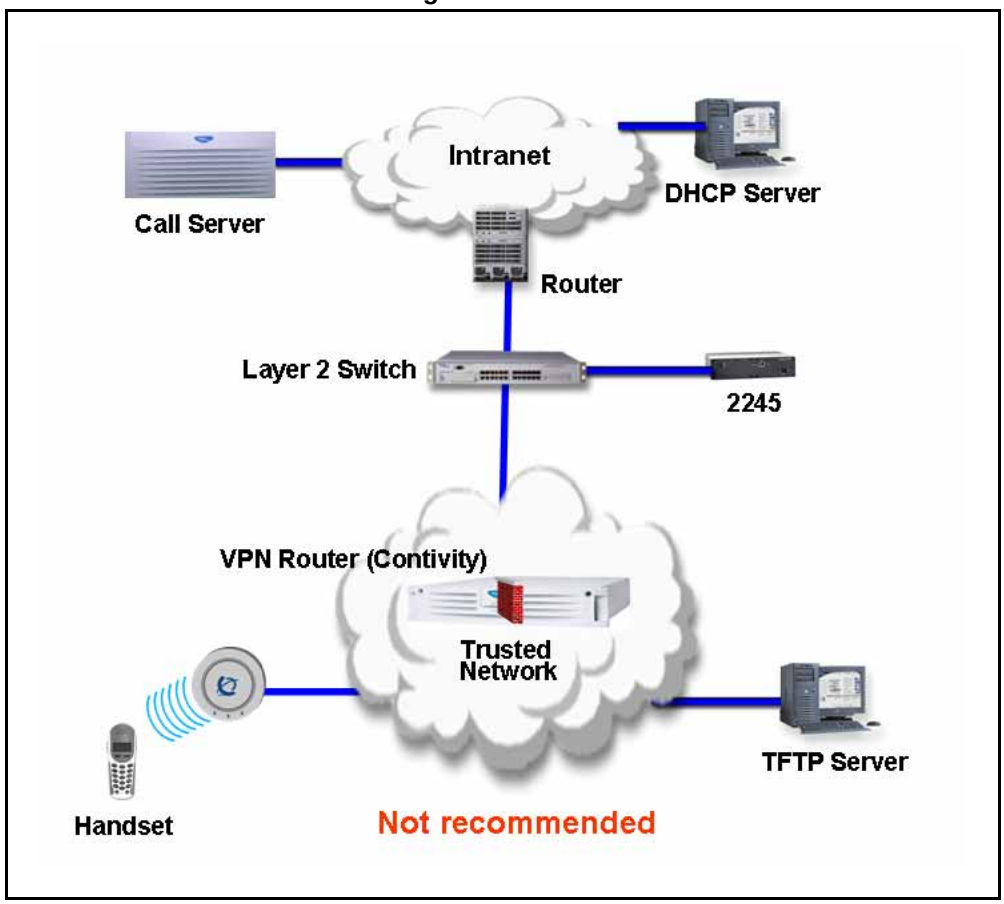

If you deploy the VPN feature of the WLAN Handset 2212 in a mixed network where WLAN Handsets 2211/2210s are also in use, the design recommendation becomes a little more complex. If you place a WLAN IP Telephony Manager in the subnet with the WLAN Handsets 2210/2211, and place a WLAN IP Telephony Manager in the subnet with the VPN Router to support the WLAN Handset 2212, admission control problems for the telephony WLAN can occur. Each WLAN IP Telephony Manager counts the number of their own devices placing calls over APs, but does

Copyright © 2003-2010 Nortel Networks. All Rights Reserved.

not count the number of calls controlled by the other WLAN IP Telephony Manager. This creates a blind spot for each device, and it is possible to oversubscribe an AP by up to 2:1. The best solution to this problem is to have the WLAN Handsets 2210/2211 handsets use the same WLAN IP Telephony Manager as the WLAN Handset 2212 (VPN). This WLAN IP Telephony Manager is on the other (remote) side of the VPN Router from the handsets, that is, over a routed hop.

WLAN IP Telephony Manager 2245 in a NAT environment

The IP Telephony Manager 2245 must be in constant communication with the handsets to ensure handset functionality. Since the IP Telephony Manager 2245 must be on the same subnet as the handsets, the IP Telephony Manager 2245 must be located on the private side of the NAT router. The wireless VoIP network does not function if the IP Telephony Manager 2245 is located on the public side of the NAT router.

Port 10000 is used for bidirectional UDP traffic between the handset alias IP addresses of the IP Telephony Manager 2245 and the Echo Server on the TPS used for NAT detection. Any network security devices that monitor network traffic between the IP Telephony Manager 2245 and the Signaling Server(s) must be configured to allow traffic using port 10000 to pass freely between these devices.

DHCP Server location in a NAT environment

The WLAN Handsets only support Full DHCP. The device acting as a DHCP Server to the WLAN Handsets must be configurable to send the vendor-specific DHCP fields.

In some cases, the NAT router acts as the DHCP Server. In this case, configure the NAT router with the required DHCP parameters and necessary information.

If a separate DHCP Server is used, it must be located on the private side of the network. See Figure 23 "Network configuration 3 with Full DHCP Server" (page 101) for more information.

Copyright © 2003-2010 Nortel Networks. All Rights Reserved.

Figure 23
Network configuration 3 with Full DHCP Server

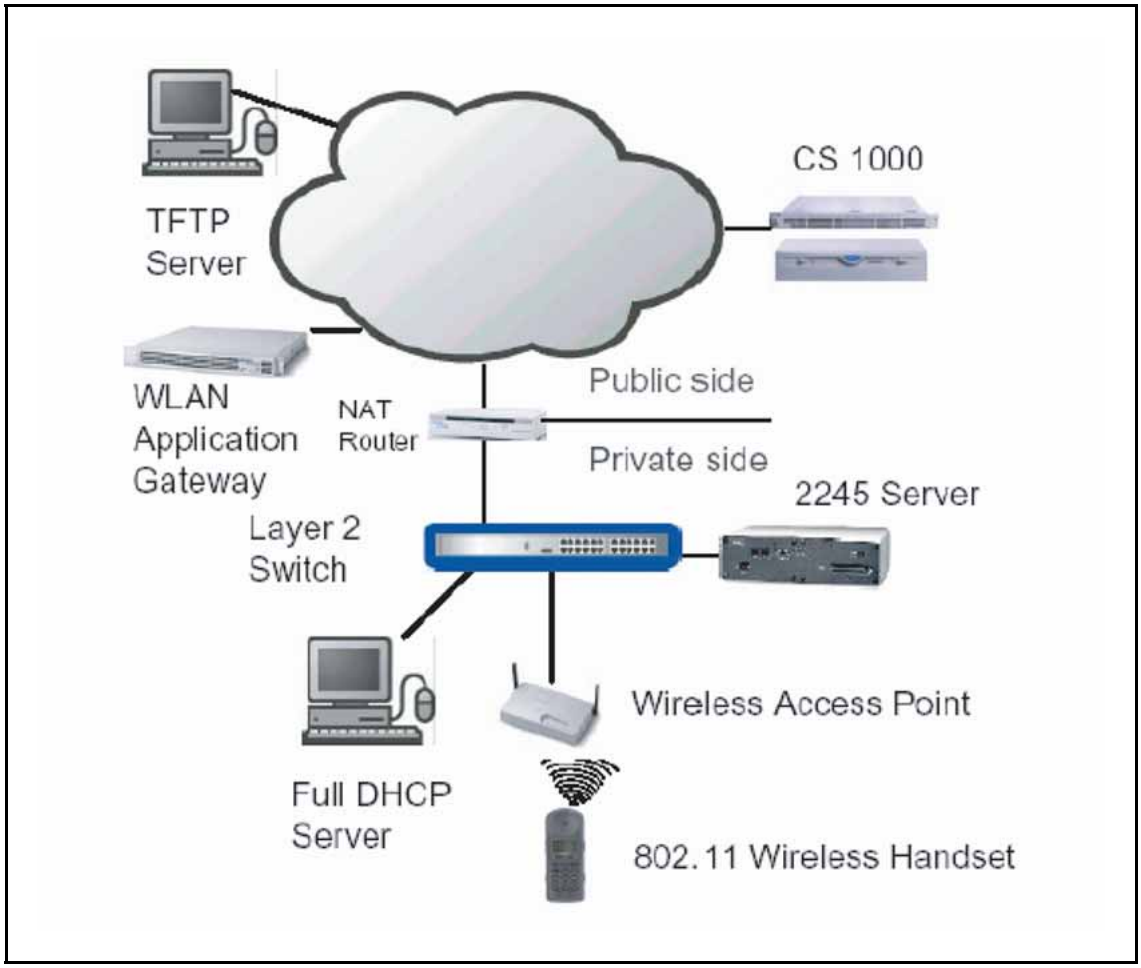

TFTP Server location in a NAT environment

The TFTP Server can be located on the public side of the network. In this case, the NAT router (and Wireless Security Switch if deployed) can have to be configured to allow WLAN Handsets access to the TFTP Server (allow traffic through on the required ports). This scenario is represented in Figure 23 "Network configuration 3 with Full DHCP Server" (page 101).

Another option is to place the TFTP Server on the private side of the network.

WLAN Application Gateway 2246 in a NAT environment

If a WLAN Application Gateway 2246 is to be deployed, the requirements are similar to that of the TFTP server.

Copyright © 2003-2010 Nortel Networks. All Rights Reserved.

The WLAN Application Gateway 2246 can be located on the public side of the network as long as traffic is allowed on the correct ports. This scenario is represented in Figure 23 "Network configuration 3 with Full DHCP Server" (page 101).

Alternatively, the WLAN Application Gateway 2246 can be placed on the private side of the network.

Communication Server 1000 features

Nearly all Communication Server 1000 features are supported on the wireless telephone system and WLAN Handsets 22x1. Partially supported features are listed in Table 14 "Partially supported Communication Server 1000 features" (page 102). The features that are not supported are listed in Table 15 "Communication Server 1000 not supported" (page 102).

Table 14
Partially supported Communication Server 1000 features

Feature	Feature full name	Description
DIG	Dial Intercom Group	Handsfree call option is not supported.
HOT I	Intercom Hotline	Voice Intercom Hotline (default) is not supported. The Ringing option is supported.
RGA	Ring Again	Since the handsets cannot buzz, there is no Ring Again tone. The only way to use the Ring Again feature is to determine if the Ring Again indicator is flashing, which is possible only when the wireless handset is in the active state.

Table 15
Communication Server 1000 not supported

Feature	Feature full name	Description
AAB	Automatic Answerback	Cannot automatically enable Handsfree.
VCC	Voice Call	Cannot automatically enable Handsfree.
	Active Call Failover	Not supported.

IP Phone 2004 features

Table 16 "IP Phone 2004 features" (page 103) provides information about the IP Phone 2004 features for the handsets.

Copyright © 2003-2010 Nortel Networks. All Rights Reserved.

Table 16
IP Phone 2004 features

Feature	Supported on the WLAN handsets	Description
Keypad	Yes	
Navigation keys	Yes	Up—Volume Up button Down—Volume Down button Left button—  Right button— 
6 feature keys	Yes	
4 soft-labelled keys	Yes	
Display	Partially	IP phone 2004: 5x24 display Handsets: 4x19 display
Message Waiting Indicator	Yes	Small envelope icon in the top right of the handset LCD display ✉
Branch Office	Yes	
Survivable Remote Gateway	Yes	
Virtual Office	Partially	No Services key. Use FCN+7 for the Services key to support Virtual Office.
XAS	No	No Expand key.
Personal Directory Callers List Redial List	Yes	

Copyright © 2003-2010 Nortel Networks. All Rights Reserved.

Table 16
IP Phone 2004 features (cont'd.)

Feature	Supported on the WLAN handsets	Description
Password Admin	No	The handsets can be password-protected, but this is different from the IP Phone 2004 password protection mechanism. The IP Phone 2004 password protection is supported, in addition to the handset password protection.
KEM	No	

Copyright © 2003-2010 Nortel Networks. All Rights Reserved.

Installation

This chapter contains information about the following topics:

- "Required materials" (page 105)
- "Preinstallation checklist" (page 106)
- "WLAN IP Telephony Manager 2245 installation tasks" (page 106)
- "WLAN Application Gateway 2246 installation" (page 109)

Required materials

The following equipment must be provided by the customer:

- power outlet(s)—must accept the provided AC adapter, one for the WLAN IP Telephony Manager 2245 and one for the WLAN Application Gateway 2246 (if used).
- plywood backboard space—the WLAN IP Telephony Manager 2245 is designed to be wall-mounted to 1/2 in. plywood securely screwed to the wall.

  OR

  optional WLAN IP Telephony Manager 2245 rack-mount kit (must be ordered separately), containing mounting plates and screws
- screws—used to mount the WLAN IP Telephony Manager 2245 to the wall. Four #8 - 1/2 in. pan-head wood screws (or similar devices) are required.
- 10BaseT CAT5 cable with an RJ-45 connector for the optional WLAN Application Gateway 2246—provides a connection to the Ethernet switch.
- CAT5 cable with an RJ-45 connector for the WLAN IP Telephony Manager 2245—provides a connection to the Ethernet switch.
- DB-9 female null-modem cable—required for initial configuration of the WLAN IP Telephony Manager 2245 and WLAN Application Gateway 2246.

Copyright © 2003-2010 Nortel Networks. All Rights Reserved.

Supplied equipment

Each WLAN IP Telephony Manager 2245 and WLAN Application Gateway 2246 is shipped with one Class II AC adapter with 24V DC, 1A output.

Preinstallation checklist

Ensure that the following requirements are met prior to installation:

- The location chosen for the WLAN IP Telephony Manager 2245 and WLAN Application Gateway 2246 is adequate and power is available.
- APs are SVP-compatible and coverage is adequate.
- A dedicated line is available for remote modem access, if needed.
- The telephone system administrator is on-site to program the existing telephone system.

WLAN IP Telephony Manager 2245 installation tasks

The following are the tasks that must be completed to install the WLAN IP Telephony Manager 2245:

1. “Wall-mount” (page 107).

   or

   “Rack-mount” (page 108).
2. “LAN connection” (page 109).
3. “Power connection” (page 109).

About the front panel

The front panel of the WLAN IP Telephony Manager 2245 contains ports to connect to the following:

- power
- LAN
- administrative computer through an RS-232 port

  Status LEDs supply information about status and activity of the WLAN IP Telephony Manager 2245. See Figure 24 "WLAN IP Telephony Manager 2245 front panel" (page 107).

Copyright © 2003-2010 Nortel Networks. All Rights Reserved.

Figure 24
WLAN IP Telephony Manager 2245 front panel

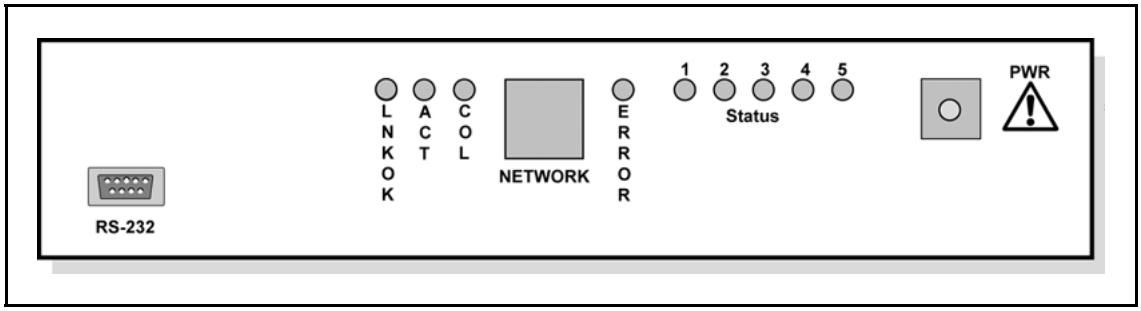

- **RS-232** port—the male DB-9 connector (DTE). Provides an RS-232 connection to a terminal, terminal emulator, or modem for system administration.
- Link LEDs
  - **LNKOK**—lit when there is a network connection
  - **ACT**—lit when there is system activity
  - **COL**—lit if there are network collisions
- **NETWORK**—connects the WLAN IP Telephony Manager 2245 to the wired Ethernet LAN
- **ERROR LED**—lit when the system has detected an error
- **Status** LEDs—indicate system error messages and status
  - **1**—heartbeat
  - **2**—active calls
  - **3, 4, 5**—currently unused
- PWR—connects to the AC adapter supplying power to the system

WARNING
Use only the provided Class II AC adapter with 24V DC, 1A output.

Wall-mount

The WLAN IP Telephony Manager 2245 can be mounted either vertically or horizontally.

Copyright © 2003-2010 Nortel Networks. All Rights Reserved.

Procedure 2
Wall-mounting the WLAN IP Telephony Manager 2245

Step	Action
1	Use a 18-inch drill bit to drill four pilot holes, on 1.84 by 12.1 inch centers (approximately equivalent to 1-1316 inch by 12-18 inch).
2	Insert the #8 x 34-inch screws in the pilot holes and tighten, leaving a 18 to 14-inch gap from the wall.
3	Slide the WLAN IP Telephony Manager 2245 over the screws until the WLAN IP Telephony Manager 2245 drops into place in the keyhole openings of the flange.
4	Tighten screws fully.

--End--

Rack-mount

The rack-mount kit is designed for mounting the WLAN IP Telephony Manager 2245 in a standard 19-inch rack and contains the following equipment:

- Mounting plates—two for each WLAN IP Telephony Manager 2245 to be mounted.
- Screws—four rack-mount screws for each WLAN IP Telephony Manager 2245 to be mounted.

Follow the steps in Procedure 3 “Rack-mounting the WLAN IP Telephony Manager 2245” (page 108) to rack-mount the WLAN IP Telephony Manager 2245.

Procedure 3
Rack-mounting the WLAN IP Telephony Manager 2245

Step	Action
1	Remove the corner screws from the WLAN IP Telephony Manager 2245.
2	Screw the U-shaped end (round screw holes) of the two mounting plates to the WLAN IP Telephony Manager 2245.
3	Screw the other end of the two mounting plates (oblong screw holes) to the rack.
4	Repeat steps 1-3 for each additional WLAN IP Telephony Manager 2245. The mounting plate is designed to provide

Copyright © 2003-2010 Nortel Networks. All Rights Reserved.

the correct minimum spacing between units. When mounting multiple units, stack the units in the rack as closely as possible.

--End--

LAN connection

Use an RJ-45 cable to connect the **NETWORK** port on the WLAN IP Telephony Manager 2245 to the connecting port on the Ethernet switch.

Power connection

Follow the steps in Procedure 4 “Connecting the power” (page 109) to connect the power to the WLAN IP Telephony Manager 2245.

Procedure 4
Connecting the power

Step	Action
1	Connect the power plug from the AC adapter to the jack labeled PWR on the WLAN IP Telephony Manager 2245.



WARNING
Use only the provided Class II AC adapter with output 24V DC, 1A.

2	Plug the AC adapter into a 110V AC outlet to supply power to the WLAN IP Telephony Manager 2245. The system cycles through diagnostic testing and the LEDs blink for approximately one minute.
3	When the system is ready for use, verify the following: **a** **ERROR** LED is off. **b** **Status 1** is blinking.

--End--

WLAN Application Gateway 2246 installation

For information about installing the optional WLAN Application Gateway 2246, see “WLAN Application Gateway 2246” (page 195).

Copyright © 2003-2010 Nortel Networks. All Rights Reserved.

Copyright © 2003-2010 Nortel Networks. All Rights Reserved.

WLAN Handset 6120/6140 Configuration

WLAN Handset 6120/6140 should be provisioned in the supported Nortel call server in the same manner as the Nortel i2004 Internet Telephones.

Each Wireless Telephone may be configured for site-specific requirements through the handset's Administration menu or by using the PC-based Handset Administration Tool (HAT). Any settings entered in the Administration menu or the HAT must match the WLAN configuration. Only the handset being configured is affected by the settings; therefore each handset must be configured individually with the identical settings.

When WPA2 Enterprise security is used, PAC files for EAP-FAST can be provisioned wirelessly or by using the HAT. For PEAP, the HAT must be used to enroll certificates. See section 4.3 for details.

Other settings that must be configured include, but are not limited to, WLAN QoS, DSCP tagging, DHCP and regulatory domain information. If these are not selected by the administrator the handset will use the default settings.

The Wireless Telephone user may select several usability options from the Standby menu, described below in the User-defined Preferences section. This information is also provided in the end-user manual.

Administration menu

Table 17 "Admin menu options for the WLAN Handset 6120/6140" (page 112) lists the Admin menu options for the WLAN Handset 6120/6140. Detailed descriptions of each item follow the table. An asterisk (*) beside a setting indicates the default setting.

Copyright © 2003-2010 Nortel Networks. All Rights Reserved.

Table 17
Admin menu options for the WLAN Handset 6120/6140

Admin menu option	2nd level	3rd level	4th Level	5th Level
Phone Config	Language	*English Française Deutsch Español Português Norsk		
	Telephony Protocol	*Type 032		
	Push-to-Talk	PTT Enable/Disable		
		Allowed Channels	*Channel 1 *Channel 2 *** *Channel 24	
		Name Channels	*Channel 1 *Channel 2 *** *Channel 24	
		Priority Channel On/Off	Name Channel	
	Time Zone	[list] *GMT		
	Daylight Saving	*DST No Adjust DST Auto <USA> DST Auto <Euro> DST Auto <AUS>		
	Protected Spd Dial	Enter Number	Enter Name	Assign Speed-dial
	Password [Disable/Enable]			
	Change Password			
	Set Terminal Type [2004/3rd Party]			
	Startup Keylock			

Copyright © 2003-2010 Nortel Networks. All Rights Reserved.

Table 17
Admin menu options for the WLAN Handset 6120/6140 (cont'd.)

Admin menu option	2nd level	3rd level	4th Level	5th Level
	Speakerphone [Disable/Enable]			
	OAI [Disable/Enable]			
	Location Services	On * Off	Set transmission interval:	1 5 10
			IP address	*___.___.___.___
Network Config	IP Addresses	*Use DHCP	*Full DHCP	
			Partial DHCP	Server1 IP Address Server1 Port Server2 IP Address Server2 Port
		Static IP	Phone IP	
			Default Gateway	
			TFTP Server IP	
			Subnet Mask	
			Syslog Server IP	
			Time Server IP	
			SVP IP	
			Call Server Info	Server1 IP Address Server1 Port Server2 IP Address Server2 Port
			OAI Server IP	
	SSID	[Enter]		

Copyright © 2003-2010 Nortel Networks. All Rights Reserved.

Table 17
Admin menu options for the WLAN Handset 6120/6140 (cont'd.)

Admin menu option	2nd level	3rd level	4th Level	5th Level
	Security	*None		
		WEP	Authentication	Open System Shared Key
			WEP On/*Off	*WEP Off WEP On
			Key Information	Default Key Key Length Key 1-4
			Rotation Secret	
		WPA2-PSK	Passphrase Pre-Shared Key	
		Cisco FSR	Username Password	
		WPA-PSK	Passphrase Pre-Shared Key	
	Reg. Domain: *none	01-02		
			[802.11 Config]	
			a →	802.11a 5.150-5.250 5.250-5.350 DFS 5.470-5.725 DFS 5.275-5.825 DFS
			*b and b/g mixed → g only →	[Transmit Power] *Maximum 5 mW <7dBm> 10 mW <10dBm> 20 mW <20dBm> 40 mW <40dBm> 50 mW <17dBm> 100 mW <20dbm>

Copyright © 2003-2010 Nortel Networks. All Rights Reserved.

Table 17
Admin menu options for the WLAN Handset 6120/6140 (cont'd.)

Admin menu option	2nd level	3rd level	4th Level	5th Level
Diagnostics	Run Site Survey			
	Diagnostics Mode [Disable/Enable]			
	Syslog Mode	*Disabled Errors Events Full		
	Error Handling Mode Halt on Error Restart on Error			
Restore Defaults				

Opening the Administration menu

The following procedure describes how to open the Administration menu.

Step	Action
1	With the handset powered off, press and hold the **Start** key. While holding the **Start** key, press and release the **End** key.
2	When the Administration menu appears, release the **Start** key.

--End--

Note: If an administration password has been set, the display requires the user to enter the password before opening the Administration menu. The default password is 123456. Press NavOK after entering the numbers. If no password is set, the display proceeds directly into the Administration menu.

Navigation

The navigation keys just below the softkeys are used to navigate through and select menu options.

Toggle options

Some menu options that have only two possibilities operate on a toggle basis. The current setting is shown on the second row of the display, called the info line. Press NavOK to toggle between the settings. For

Copyright © 2003-2010 Nortel Networks. All Rights Reserved.

example, when Enable PTT is the menu option, PTT Disabled appears on the info line. If you select Enable PTT , PTT Enabled appears on the info line and the menu option toggles to Disable PTT .

Data entry and editing

An asterisk (*) next to an option on the display indicates that it is selected. Use the Nav keys and the softkeys to navigate and select desired options.

Enter numbers by pressing the buttons on the keypad. The blinking underscore identifies the current cursor position. When entering alphanumeric strings, the CAPS/caps softkey appears and can be pressed to toggle the case. Enter letters by repeatedly pressing the corresponding key until the desired letter displays on the screen. Use the CAPS softkey to change the case as needed.

To edit during entry, delete the character to the left of the cursor by pressing the Del softkey. To replace an entry, delete it by pressing the Clr softkey and then enter the new data. To edit an existing entry, use Nav < and Nav > to move the cursor position, and then press the Del softkey to delete the character to the left. Insert new data by pressing the buttons on the keypad.

Language

Choose a language from those on the list.

Telephony Protocol

Use Telephony Protocol to select the VoIP protocol that your site is licensed to download and run. The UNIStim Protocol to use for the WLAN Handset 6120/6140 is 032. Other protocols cause the handset to malfunction.

Push-to-talk

All 24 Push-to-talk channels are allowed by default. The Push-to-talk menu provides the following options:

- Allowed Channels

  Toggle the allowed status of any allowed channel by scrolling to the channel to be disallowed and pressing Enter. Allowed channels are displayed with an asterisk (*) in the left column. Only those channels allowed in the Administration menu appear on the Configuration menu, where they can be subscribed to by the user.

- Named Channels

  You can name allowed channels. The name appears instead of the channel number when channel information appears on the handset. The name appears on the local handset only; it does not appear on target handsets.

- Priority Channel

Copyright © 2003-2010 Nortel Networks. All Rights Reserved.

You can configure the priority channel, also referred to as channel 25, which makes it available to all Push-to-talk handsets. When you make a Push-to-talk broadcast on the priority channel, it overrides any active Push-to-talk transmission on all other channels. You can name the priority channel.

Time zone

Worldwide time zone options are available. Select your time zone from the list. Greenwich Mean Time (GMW) is the default.

Daylight Savings

You can adjust the handset for daylight savings time. The following are the Daylight Savings menu options:

- DST No Adjust (Default)
- DST Auto (USA)
- DST Auto (AUS)
- DST Auto (EURO)

Protected speed-dial

The protected speed-dial number appears as the first item on the speed-dial list and is specially marked with an asterisk (*) as the first character in its name. The protected speed-dial number is usually programmed to a number to be called in emergency situations.

If the Call Server offers directory services, Redial, Speed-dial, and Phonebook features in the handset are disabled, including the protected speed-dial number feature. Any entry here is overridden by the Call Server.

Password (Disable/Enable) and Change Password

The password option controls access to the administrative functions in the Admin menu of the wireless handset. Configure the password in each handset for which controlled access is desired. By default, the password is disabled when the handset is shipped.

To modify the password requirement, enter the default or previously configured password to verify the change. The Password option operates as a toggle between Enabled and Disabled. Press Enter to change the password protection state. Change Password appears only if the password is enabled.

Copyright © 2003-2010 Nortel Networks. All Rights Reserved.

ATTENTION
Record the wireless handset Admin password and store it in a safe place. Do not lose the Admin password! If the Admin password is lost or forgotten, you can be required to return the handset to Nortel to have the password reset.

Set Terminal Type

The terminal type configures the WLAN Handset 6120/6140 for the type of PBX in use. The Nortel Communication Server 1000 system requires the 2004P1 or 2004P2 setting, the BCM system requires a third-party setting. The current terminal type is shown on the information line. Press Enter to toggle to the alternate setting.

Startup Keylock

Startup Keylock deactivates the keypad during startup so that initialization cannot be interrupted. This is a toggle option; the info line displays whether the option is enabled or disabled. Select No Startup Keylock to disable, and select Startup Keylock On to enable.

Speakerphone

You can disable the speakerphone when quiet handset operation is required. Disabling the speakerphone removes the speakerphone soft key from the active mode display. The current speakerphone setting is shown on the information line. Press Enter to toggle to the alternate setting.

OAI (Disable/Enable)

With the Nortel Open Application Interface (OAI), the wireless handsets can connect with the optional WLAN Application Gateway 2246. This device allows third-party computer applications to display alphanumeric messages on the wireless handset display and take input from the wireless handset keypad.

If a WLAN Application Gateway 2246 is installed in the system, you can optionally enable OAI in the wireless handset. Select whether the wireless handset can attempt to connect to the WLAN Application Gateway 2246 by pressing Enter to toggle to the alternate setting.

If OAI is enabled, and a WLAN Application Gateway 2246 IP address is available to the wireless handset (either through DHCP or Static IP configuration), the wireless handset communicates with the WLAN Application Gateway 2246 is turned on, and then periodically during the time the wireless handset is on.

If a WLAN Application Gateway 2246 is not installed at the site, disable the OAI feature to preserve network bandwidth and battery life.

Copyright © 2003-2010 Nortel Networks. All Rights Reserved.

IP addresses

The WLAN IP 6120 handset can operate in three modes: DHCP enabled, either Full DHCP or Partial DHCP, and Static IP. Select the mode for operation from the IP Address menu:

- Use DHCP—uses Dynamic Host Configuration Protocol to assign an IP address each time the handset is turned on. If DHCP is enabled, the handset also receives all other IP address configurations from the DHCP server.

  — Full DHCP—enables DHCP for all IP addresses.

  — Partial DHCP—enables static IP address configuration for Server 1, Server 1 Port, Server 2, and Server 2 Port. All other IP addresses are assigned by DHCP.

  Server 1 (2) IP address—the IP addresses of the primary and secondary Nortel device. If using Static IP configuration, this is the IP address of the device. If DHCP is used, the handset tries to obtain the IP address and port information by using the following DHCP options: 43, 128, 144, 157, 191, and 251.

  Server 1 (2) Port—the port number used by the primary and secondary Nortel device to communicate with IP telephones. If using Static IP configuration consult your Nortel documentation for port numbers. If DHCP is used, the handset tries to obtain the IP address and port information by using the following DHCP options: 43, 128, 144, 157, 191, and 251.

- Static IP—allows you to manually set a fixed IP address. If selected, the handset prompts for the IP Addresses of each configurable network component. When entering addresses, enter the digits only, including leading zeroes. No periods are required.

Regardless of the mode in which the handset is operating, you must configure the following components:

- Phone IP—the IP address of the handset. This is automatically assigned if DHCP is used. If using Static IP configuration, you must obtain a unique IP address for each handset from your network administrator.
- Default Gateway and Subnet Mask—used to identify subnets, when using a complex network that includes routers. Both of these must be configured either with an IP address under Static IP (not configured to 000.000.000.000 or 255.255.255.255) or with DHCP for the handset to contact any network components on a different subnet. If configured on the DHCP server, use option 3 for the Default Gateway and option 1 for the Subnet Mask. Contact your network administrator for the proper settings for your network.

Copyright © 2003-2010 Nortel Networks. All Rights Reserved.

ATTENTION
A WLAN Handset 6120/6140 cannot roam across subnets because it cannot change its IP address while it is operational. Ensure that all your access points are attached to the same subnet for proper operation. If DHCP is enabled, you can change the subnet of the handset by turning off the handset, and then turning it back on when it is within range of access points on the new subnet.

- TFTP Server IP—the IP address of a TFTP server on your network that holds hardware images for updating the handsets. If this feature is configured (not configured to 0.0.0.0 or 255.255.255.255), either by using Static IP configuration or by using DHCP option 66 (TFTP Server), or the Boot server/next server (siaddr) field, the handset checks for newer hardware each time it is powered on or comes back into range of your network. This check takes only a second and ensures that all handsets in your network are kept up-to-date with the same version of hardware.
- Syslog Server IP—the IP address of the Syslog Server.
- Time Server IP—the IP address of the time server.
- SVP IP address—the IP address of the WLAN IP Telephony Manager 2245. If you use the Static IP configuration, this is simply the IP address of the WLAN IP Telephony Manager 2245. To have a permanent IP address, you must statically configure the WLAN IP Telephony Manager 2245. If DHCP is used, the handset tries the following, in this order:
  a. DHCP option 151
  b. a DNS lookup of SLNKSVP2 if the DHCP options 6 (DNS Server) and 15 (Domain Name) are configured
- Call Server Info—the IP addresses of the Nortel Communication Server 1000 server. When you set static IP addresses, you must configure the IP addresses and Port addresses for Svr1 and Svr 2. For more information, see "Partial DHCP" (page 119) .
- OAI Server IP—the IP address of the NetLink (NL) OAI Gateway (if applicable). If you use Static IP configuration, this is simply the IP address of the NL OAI Gateway. If you use the DHCP, the handset tries the DHCP option 152.

SSID

Enter the SSID.

Security

The following are the security options:

Copyright © 2003-2010 Nortel Networks. All Rights Reserved.

ATTENTION
For Wired Equivalent Privacy (WEP), WiFi Protected Access using PSK Preshared Key (WPA-PSK), and WPA2-PSK configure each of the following options to match exactly the settings in your APs. Encryption codes appear as they are entered. For security reasons, codes do not appear on the display when a user returns to the Admin menu, Encryption options.

- NONE—disables any 802.11 encryption or security authentication mechanisms.
- WEP—a wireless encryption protocol that encrypts data frames on the wireless medium, allowing for greater security in the wireless network. If you use WEP, you must configure each handset to correspond with the encryption protocol configured in the access points. Select the entries from the following options to enable the handset to acquire the system.
  - Authentication—Select either Open System or Shared Key.
  - WEP Enable/Disable—Select either Enable WEP or Disable WEP.
  - Key Information—Configure the following:
    - Default Key—Enter the key # specified for use by the handsets. This is 1 through 4.
    - Key Length—Select either 40-bit or 128-bit depending on the key length specified for use at this location.
    - Key 1-4—Scroll to the key option that corresponds to the Default Key that you entered above. Enter the encryption key as a sequence of hexadecimal characters. (Use the 2 and 3 keys to access hexadecimal digits A-F.)
  - Rotation Secret–Is used for proprietary WEP key rotation. To determine whether this feature is supported in your system, see your custom document.
- WPA2-PSK—The security features of WPA2-PSK are available which you can use if supported by the access points in the facility. Select one of the following:
  - Passphrase—Enter a passphrase between 8 and 63 characters in length.
  - Direct Entry—Enter the 256-bit key code.

ATTENTION
For more information about whether WPA2-PSK is recommended for an AP, see the Configuration Note for the installed APs. Configure the recommended version on the AP and select the corresponding option on the Admin menu.

Copyright © 2003-2010 Nortel Networks. All Rights Reserved.

- Cisco FSR—To provide the highest level of security without compromising voice quality on Cisco Aironet WLAN APs, the Fast Secure Roaming (FSR) mechanism is implemented. Fast Secure Roaming is designed to minimize call interruptions for wireless handset users as they roam throughout a facility. Existing Aironet 350, 1100, and 1200 APs can require a hardware upgrade to support FSR. Cisco FSR requires advanced configuration of the Cisco access points at your site. For more information about configuring your access points and other required security services on your wired network, see the Cisco representative for detailed documentation. To configure Cisco FSR in the wireless handset, you must enter a Radius Server user name and password into each handset.
  - User name—Enter a user name that matches an entry on your Radius server. User names are alphanumeric strings, and can be entered using the alphanumeric string entry technique.
  - Password—Enter the password that corresponds to this Username.
- WPA-PSK—The security features of WPA-PSK are available and can be used if supported by the access points in the facility. Select one of the following:
  - Passphrase—enter a passphrase between 8 and 63 characters in length.
    - 8-character passphrase—weak
    - 20-character passphrase—minimum
    - 20 to 30-character passphrase—recommended
    - 63-character passphrase—very strong
  - Direct Entry—enter the 256-bit key code.

Regulatory domain, 802.11 configuration, and transmit power

Regulatory domain, 802.11 configuration, and transmit power are interdependent settings. After the domain and 802.11 type are established, you can configure the transmit power.

ATTENTION
The 802.11 options and the transmit power options, must be configured to match the corresponding settings used by the APs in the facility.

The FCC requirements dictate that the menu for changing the domain be available by password, which in this case is the Line key. To configure the domain, press Line, and then select the domain:

- 01 North America
- 02 Europe

Copyright © 2003-2010 Nortel Networks. All Rights Reserved.

For the North America Domain, the following frequency ranges and channel numbers are supported on the handset based on U-NII regulatory domain.

The following table describes FCC required frequency ranges and channel numbers.

Table 18
Frequency ranges and channel numbers

Band (GHz)	Channel numbers
U-NII lower band (5.15-5.25)	36, 40, 44, 48
U-NII middle band (5.25-5.35)	52, 56, 60, 64
U-NII upper band (5.725-5.825)	149, 153, 157, 161

ATTENTION
The United States also allows for transmissions in the ISM regulatory domain on channel 165 whose center frequency is 5.825 GHz, which is at the upper edge of the upper U-NII band; however, is it not compatible with the handset. Therefore, it is important to not configure any WLAN Access Points for operation on channel 165.

After you establish the regulatory domain, the 802.11 Config options appear on the display. You can choose only one option; 802.11 (b and b/g mixed) is the default. If 802.11 (a) is selected, another menu appears so that you can select the 802.11a transmission frequency. Only those ranges that are allowed in the selected domain appear. You can select multiple ranges. The selected mode and ranges are marked with an asterisk (*). Press the Done soft key after you finish specifying the 802.11 mode.

After you press the Done softkey, the Transmit Power menu apperas. Only those power levels that apply to the domain and 802.11 mode are listed. You can select only one level. The default varies with the domain and 802.11 mode. The selected level is marked with an asterisk (*).

Run Site Survey

Select this option to activate the Site Survey mode. Site Survey runs immediately upon selecting this option. For more information about Site Survey, see “Run Site Survey for the WLAN Handset 6120/6140” (page 249) and “Run Site Survey for the WLAN Handset 2210/2211/2212” (page 247).

Diagnostics Mode

For more information about the Diagnostics Mode options, see “Diagnostics Mode” (page 123).

Copyright © 2003-2010 Nortel Networks. All Rights Reserved.

Syslog Mode

Configure Syslog Mode to one of the following options:

- Disabled—turns syslog off
- Errors—logs events that are considered errors
- Events—logs all errors, plus some events of interest
- Full—logs all errors and all other events of interest

Table 19 "Syslog message levels for the WLAN Handset 6120/6140" (page 124) lists the syslog messages and the level of logging that produces each message.

Table 19
Syslog message levels for the WLAN Handset 6120/6140

Message type	Errors	Events	Full
Failed handoff	Yes	Yes	Yes
Successful handoff	No	Yes	Yes
Security error	Yes	Yes	Yes
Call start or end	No	Yes	Yes
Audio error threshold exceeded	Yes	Yes	Yes
Audio stats	No	No	Yes (every 5 s)
Radio error threshold exceeded	Yes	Yes	Yes
Radio stats	No	No	Yes (every 5 s)

For more information, see “Syslog Mode” (page 254).

Error Handling Mode

The Halt on Error option causes the handset to stop operating if an error message is received. Unless the error is a fatal one, you can resume normal operation by power cycling the handset. Press Start or remove and replace the Battery Pack. The Restart On Error option causes the handset to make every effort to restart quietly and quickly to standby mode. In either scenario, a call in progress is lost.

The Syslog Server can capture error detail and can also be available for downloading with the Handset Administration Tool.

Restore Defaults

The Restore Defaults option restores all user and administrative parameters, except Telephony Protocol, to the factory default configurations. For more information, see “Restore Defaults” (page 124).

Copyright © 2003-2010 Nortel Networks. All Rights Reserved.

Configuration menu

You can configure user-defined preferences from the Configuration menu. The wireless handset must be in contact with the system, no error messages displayed, and in Standby mode. For more information, see Table 20 "Configuration menu" (page 125). An asterisk (*) indicates the default value.

With the handset in the standby state, press the Cfg softkey to open the standby menu.

Table 20
Configuration menu

Config menu	2nd level	3rd level	4th level	5th level	6th level
Lock Keys					
User Profiles	Silent Vibrate Loud Soft Custom				
		Set as Active			
		Ring Settings	Telephone	Ring Cadence	Off PBX Continuous Short Pulse Long Pulse
				Ring Tone	Tones 1–10
				Ring Volume	Volume (bars)
				Vibrate Cadence	Off PBX Continuous Short Pulse Long Pulse
				Ring Delay	No Delay 5 Second Delay 10 Second Delay
			Auxiliary Ring 1		
			Auxiliary Ring 2		

Copyright © 2003-2010 Nortel Networks. All Rights Reserved.

Config menu	2nd level	3rd level	4th level	5th level	6th level
		Noise Mode	Normal High Severe		
		Ring in Headset Ring in Speaker			
		Warning Tones Disable/Enable			
		Key Tones Disable/Enable			
		Push-to-talk Disable/Enable (WLAN Handset 6140 only)			
Phone Settings	Keypad Autolock	Disable 5 seconds 10 seconds 20 seconds			
	Language	*English Français Deutsch Español Português Norsk			
	Display Contrast	Set Contrast			
	Use Hearing Aid Use No Hearing Aid				
	Startup Song Play/Inhibit				
	Predial Disable/ Enable				

Copyright © 2003-2010 Nortel Networks. All Rights Reserved.

Config menu	2nd level	3rd level	4th level	5th level	6th level
Push to Talk (WLAN Handset 6140 only)	Default Channel	Channel 1 …. Channel 24			
	Subscribed Channels	Channel 1 Channel 2 Channel 3 Channel 4 …. Channel 24			
	PTT Audio Volume	Audio Volume (bars)			
	PTT Tone Volume	Tone Volume (bars)			
System Info	Phone IP Address				
	Alias IP Address				
	SVP IP Address				
	Curr Call Server				
	Terminal Type				
	hardware Version				
Extension	Enter Number				
User Name	Enter User Name				
Nortel Communication Server 1000 —You cannot edit the extension number. The handset obtains the extension from the server and it appears on the info line when you select this option. BCM —You must configure the extension number here in the Configuration Menu for it to appear on the handset in standby mode and in Caller ID.					

Lock keys

If you enable the Keypad Lock option, the keypad locks immediately. To unlock the keypad, press FCN and then the # key.

User profiles

Select and configure your user profile.

Copyright © 2003-2010 Nortel Networks. All Rights Reserved.

Ring Settings

From the Ring Settings menu, you can configure the ring for three separate functions. Use Telephone Ring for usual telephony functions. Use the Auxiliary Rings to configure different ringing patterns for OAI applications.

Telephone Ring

Select Telephone Ring to configure a distinctive ring style, volume, and sequence. Select from an audible ring or a vibrate-only ring or a vibrate ring along with or followed by an audible ring.

Ring Cadence

Select Ring Cadence to configure the rhythm of the ring. You can select a preprogrammed ring cadence or opt to obtain the cadence from the PBX. The PBX option utilizes distinctive rings sent by the PBX while allowing you to configure unique rings for auxiliary applications.

- Off: silent
- PBX: PBX determines ring cadence

  (For example, the PBX can send rings that differentiate between internal and external calls.)
- Continuous: rings continually until answered
- Short Pulse: rings in short bursts
- Long Pulse: rings in long bursts

Ring Tone

Select Ring Tone to choose from five available tones. You can use the Play softkey to preview the tones before selection. If you configure Ring Cadence to off, the Ring Tone option does not appear on the menu.

Ring Volume

(WLAN Handset 2211 only) Select Ring Volume to adjust the volume level. The graduated volume bar indicates the levels. You can override this setting by adjusting volume while the handset is ringing.

Vibrate Cadence

Copyright © 2003-2010 Nortel Networks. All Rights Reserved.

Select Ring Cadence to configure the rhythm of the ring. You can select a preprogrammed vibrate cadence or opt to obtain the cadence from the PBX. The PBX option utilizes distinctive vibrate cadence sent by the PBX while allowing you to configure unique vibrate cadence for auxiliary applications.

- Off: silent
- PBX: PBX determines vibrate cadence

  (For example, the PBX can send vibrate cadences that differentiate between internal and external calls.)
- Continuous: vibrates continually until answered
- Short Pulse: vibrates in short bursts
- Long Pulse: vibrates in long bursts

Ring Delay

Select Ring Delay to specify how long the vibrate cadence plays before the audible ring begins. The Ring Delay option appears if both ring cadence and vibrate cadence are configured to PBX, Continuous, Short Pulse, or Long Pulse. If Ring Cadence or Vibrate Cadence are turned off, the Ring Delay option does not appear on the menu.

Auxiliary Ring 1 and Ring 2

The Auxiliary rings are designed to be utilized by OAI applications. With Auxiliary Ring 1 and Ring 2 you can configure a distinctive ring for these applications.

Noise Mode

Select Noise Mode to specify the noise level in your environment. Select Normal for most office environments; High: for moderate background noise; or Severe: for extremely noisy conditions. The High and Severe modes adjust the microphone and in-ear speaker volume of the handset to account for background noise. If you use High or Severe mode in a quiet environment, the person on the other end of the line can find it difficult to hear your voice.

Ring in Headset Ring in Speaker

You can select to have the handset ring in the headset or the handset speaker.

Copyright © 2003-2010 Nortel Networks. All Rights Reserved.

Warning Tones
You can specify whether warning tones (such as system up or down, or out of range) play. Warning Tones are enabled by default.

Key Tones
You can specify whether tones play when keys are pressed. Key Tones are enabled by default.

Push-to-talk Disable/Enable
You can enable or disable the PTT feature locally.

ATTENTION
The Nortel WLAN Handset 6120/6140 uses channels for incoming and outgoing radio communication. While PTT is active, the handset is in PTT mode. It can receive regular phone calls while in this mode. When a regular phone call is answered, the handset enters active mode.

Phone Settings
The following sections describe the Phone Settings menu options.

Keypad Autolock
You can configure the keypad to lock automatically when in standby mode. You can disable the automatic locking function (the default) or adjust the autolock for a 5, 10, or 20 second delay before locking.

Language
Select Language to view the available languages and select a language from the list.

Display Contrast
You can adjust the display for different lighting conditions.

Use Hearing Aid/Use No Hearing Aid
You can select whether you use a hearing aid.

Startup Song Play/Inhibit
You can select whether the startup song plays.

Predial Disable/Enable
Predial allows you to enter the number you want to predial while the handset is in standby mode. You can select whether to enable the Predial feature.

Copyright © 2003-2010 Nortel Networks. All Rights Reserved.

Push-to-Talk

From the Push-to-Talk menu, you can configure the default channel, subscribed channels, tone volume and audio volume. The menu for Push-to-Talk does not appear if PTT is disallowed on the Admin menu or if no channel is enabled on the Admin menu.

System Info

The following sections describe the System Info menu options.

Phone IP Address

Select Phone IP Address to view the IP address currently assigned to the handset.

Server IP Address

Select Server IP Address to view the IP address of the WLAN IP Telephony Manager 2245 and the OAI Server (if installed).

Alias IP Address

Select Alias IP Address to view the alias IP address of the wireless handset (provided by the WLAN IP Telephony Manager 2245).

SVP IP Address

Select SVP IP Address to view the IP address of the SpectraLink Voice Priority (SVP) Server.

Current Call Svr

Select Current Call Svr to view the current Call Server IP address and port number.

Terminal Type

Select Terminal Type to view the type of PBX in use.

For more information about the user-defined preferences in the Configuration menu and how to configure them, see *WLAN Handset 6120 User Guide* (NN43150-100).

hardware Version

Select hardware Version to view the current hardware version of the handset.

Copyright © 2003-2010 Nortel Networks. All Rights Reserved.

Extension

Select Extension to view the extension currently assigned to the handset.

- CS1000—You cannot edit the extension number. The handset obtains the extension from the server and it appears on the info line when you select this option.
- BCM—You must configure the extension number here in the Configuration menu for it to appear on the handset in standby mode and in Caller ID.

User Name

Select User Name to enter or change the name that appears on the handset display, next to the extension, in standby mode.

Copyright © 2003-2010 Nortel Networks. All Rights Reserved.

WLAN IP Telephony Manager 2245 configuration

This chapter contains information about the following topics:

- "Introduction" (page 133)
- "Configuration tasks" (page 136)
- "Connect to the WLAN IP Telephony Manager 2245" (page 137)
- "Configure the network" (page 139)
- "Configure the WLAN IP Telephony Manager 2245" (page 144)
- "Change the password" (page 146)

Introduction

The WLAN IP Telephony Manager 2245 acts as a proxy for the wireless handsets and provides several services for them. It is connected to the same subnet as the wireless handsets. The wireless handsets always communicate voice and signaling directly with the WLAN IP Telephony Manager 2245, using the proprietary SpectraLink Voice Protocol (SVP).

SVP is required for quality of service (QoS) because the current IEEE 802.11a/b/g wireless LAN standard provides no mechanism for differentiating audio packets from data packets. This standard is undergoing revision to version 802.11e to provide functionality in an industry standard similar to SVP, therefore ensuring high-quality voice in a mixed-client environment.

The wireless handsets are configured with the IP address of a designated WLAN Telephony Manager 2245. As the wireless handsets register, they receive a list of IP addresses of other WLAN Telephony Manager 2245 in the network and they distribute among other WLAN Telephony Manager 2245 to share the load. This WLAN Telephony Manager 2245 becomes the registration point. The list of addresses automatically updates each time the wireless handset powers on.

Copyright © 2003-2010 Nortel Networks. All Rights Reserved.

If the WLAN Telephony Manager 2245 fails, the wireless handset drops active calls, then re-registers with another WLAN IP Telephony Manager 2245 in their list. The wireless handsets return to active state after this registration period. This failure does not affect other wireless handsets registered on the other WLAN IP Telephony Manager 2245 units.

The recovery period for the wireless handsets on the failed WLAN IP Telephony Manager 2245 is approximately 60 seconds.

The entire network is inoperative when new software downloads to the network of WLAN IP Telephony Manager 2245 units. When the download completes, the network comes back into service automatically.

This functionality requires the minimum software. See Table 21 "Minimum software requirements" (page 134).

Table 21
Minimum software requirements

Device	Minimum version
WLAN IP Telephony Manager 2245	174.034
WLAN Handset 2210/2211/2212	97.071
WLAN Handset 6120/6140	115.015

If either component is at an earlier release then the system works in the current master or slave mode.

Functional description

The WLAN IP Telephony Manager 2245 provides the following services to the handsets:

- It acts as a proxy for every wireless handset; that is, all UNIStim signaling and RTP media to and from the wireless handset pass through the WLAN IP Telephony Manager 2245. Except for the initial DHCP and TFTP sessions, the wireless handsets only communicate with the WLAN IP Telephony Manager 2245.

  Each WLAN IP Telephony Manager 2245 is configured with an IP address with which all of the wireless handsets communicate. In addition, each WLAN IP Telephony Manager 2245 is configured with a pool of IP addresses. When a wireless handset registers with a WLAN IP Telephony Manager 2245, the wireless handset is assigned one of the IP addresses from the pool. All communication between this WLAN IP Telephony Manager 2245 and other devices (TPS, IP Phones, gateways, and other wireless handsets) is always done through its pool IP address. In this sense, the WLAN IP Telephony Manager 2245 acts as a NAT (Network Address Translation).

- The WLAN IP Telephony Manager 2245 server tags and untags packets with the SVP header. SVP packets have the protocol byte

Copyright © 2003-2010 Nortel Networks. All Rights Reserved.

of the IP header configured to 0x77. SVP-compliant APs use this proprietary tagging to give priority to tagged packets. For UDP (UNIStim and RTP) packets going from the wireless handset to the network, the WLAN IP Telephony Manager 2245 replaces the SVP protocol number, 0x77, with the UDP number, 0x11. For packets going from the network to the wireless handset, the protocol number is changed from 0x11 to 0x77.

Because the packets that traverse the network between the wireless handset and the WLAN IP Telephony Manager 2245 are not standard IP packets (the packets use a nonstandard protocol number), there can be no Layer 3 routing in the path. Therefore, the wireless handsets and WLAN IP Telephony Manager 2245 units must be in the same logical subnet.

- RTP packets between the wireless telephone and the WLAN IP Telephony Manager 2245 always contain 30 ms worth of voice, no matter what is configured on the Call Server. The WLAN IP Telephony Manager 2245 repackages the RTP packets to conform to the size that is configured in the Call Server. This provides more efficient use of the available Radio Frequency (RF) bandwidth at the expense of slightly increased jitter and latency.
- The WLAN IP Telephony Manager 2245 is configured with a maximum allowable number of simultaneous media streams on a single AP. The WLAN IP Telephony Manager 2245 keeps track of the number of media streams on each AP and blocks calls to and from a wireless handset that would exceed the configured capacity. For more information about call blocking, see “Call blocking” (page 91).
- The WLAN IP Telephony Manager 2245 has limitations for high availability. There are some types of failure that can result in complete outages. Every group of WLAN IP Telephony Manager 2245 units in a single subnet has a master node. If this node fails or if connectivity to it is lost, the entire WLAN IP Telephony Manager 2245 group fails. All active calls are lost and no future calls can be placed until the master WLAN IP Telephony Manager 2245 is replaced (either by installing a spare or by reconfiguring one of the slaves to be a master).
- Alternately, if one of the slave WLAN IP Telephony Manager 2245 units fails, the group as a whole still functions, although some individual calls can be lost due to the reassigning of handsets throughout the group. One less WLAN IP Telephony Manager 2245 also means that the call capacity of that node is lost until the failed WLAN IP Telephony Manager 2245 is replaced.

A keep-alive packet exchange runs between the wireless handset and the WLAN IP Telephony Manager 2245 every 30 seconds. If the wireless handset detects that the WLAN IP Telephony Manager 2245 is

Copyright © 2003-2010 Nortel Networks. All Rights Reserved.

unreachable, the wireless handset resets itself and attempts to reestablish a connection with otherthe master WLAN IP Telephony Manager 2245 units.

Configuration tasks

The following are the tasks required to configure the WLAN IP Telephony Manager 2245:

1. “Connecting the APs” (page 136)
2. “Connect to the WLAN IP Telephony Manager 2245” (page 137).
3. “Configure the network” (page 139).
4. “Radio Settings” (page 142)
5. “QoS Configuration” (page 142)
6. “Configure the WLAN IP Telephony Manager 2245” (page 144).
7. “Change the password” (page 146).

In the initial configuration of the WLAN IP Telephony Manager 2245, the IP addresses and the maximum number of active calls per AP must be configured. Later, you can use Telnet to configure the IP address of the TFTP Server where the software files are located and the hostname.

Connecting the APs

As the APs are connected to the network, they automatically find the controller through the LWAPP discovery algorithms. The Dynamic Host Configuration Protocol (DHCP) server assigns each AP an IP address.

ATTENTION
You can configure a DHCP server to run on a remote PC for a small deployment. However, for large-scale deployments, an enterprise-grade DHCP server must be used.

The ap-manager and management interfaces configuration include the DHCP server you have configured. Alternately, you can configure the DHCP server internally on the controller to hand out leases to the connected clients. The instructions for doing so are included at the end of this document.

ATTENTION
The WLC DHCP server does not lease addresses to the AP.

Perform the following procedure to connect APs.

Procedure steps

Copyright © 2003-2010 Nortel Networks. All Rights Reserved.

Step	Action
1	From the main menu, choose **Controller**.
2	In the navigation pane, click **Interfaces**. Verify that the proper IP addresses are assigned to the interfaces.
3	Under **Interface Name** click **management**.
4	Under **DHCP Information**, enter the IP address of the **Primary DHCP Server**.
5	Repeat this step for the **ap-manager** interface.
6	Click **Apply** to save the changes.

--End--

Connect to the WLAN IP Telephony Manager 2245

The initial connection to the WLAN IP Telephony Manager 2245 must be made through a serial connection to establish the WLAN IP Telephony Manager 2245 IP address. After the IP address is established, connection to the WLAN IP Telephony Manager 2245 can be done through the network using Telnet.

Nortel recommends that you perform the complete initial configuration after the serial connection is made.

Serial port connection

Follow the steps in Procedure 5 “Connecting to the WLAN IP Telephony Manager 2245 through a serial port” (page 137) to connect to the WLAN IP Telephony Manager 2245 through a serial port.

Procedure 5
Connecting to the WLAN IP Telephony Manager 2245 through a serial port

Step	Action
1	Using a DB-9 female, null-modem cable, connect the WLAN IP Telephony Manager 2245 to the serial port of a terminal or PC.
2	Run a terminal emulation program (such as HyperTerminal), or use a VT-100 terminal with the following configuration: • Bits per second: 9600 • Data bits: 8 • Parity: None

Copyright © 2003-2010 Nortel Networks. All Rights Reserved.

- Stop bits: 1
- Flow control: None

ATTENTION
If you use Windows 2000, you must install Service Pack 2 to enable the use of HyperTerminal™.

3 Press **Enter** to display the login screen.

4 Enter the default login **admin** and the default password **admin**.

The login name and password are case-sensitive.

The **NetLink SVP-II System** screen appears.

--End--

Telnet connection

The Telnet method of connection is used for routine maintenance of the WLAN IP Telephony Manager 2245 for local and remote administration, depending on the network.

ATTENTION
You can only use Telnet after you configure the WLAN IP Telephony Manager 2245 IP address.

Follow the steps in Procedure 6 “Connecting to the WLAN IP Telephony Manager 2245 through Telnet” (page 138) to connect to the WLAN IP Telephony Manager 2245 through Telnet.

Procedure 6
Connecting to the WLAN IP Telephony Manager 2245 through Telnet

Step	Action
1	Run a Telnet session to the IP address of the WLAN IP Telephony Manager 2245.
2	Enter the login and the password. The login name and password are case-sensitive. The **NetLink SVP-II System** menu appears. The following menu choices are available: • **System Status**—view software code version, error messages, and status of operation. See “View software version” (page 160) and “Troubleshooting” (page 167). • **SVP-II Configuration**—set the mode and reset the system. See “Configure the WLAN IP Telephony Manager 2245” (page 144).

Copyright © 2003-2010 Nortel Networks. All Rights Reserved.

- **Network Configuration**—set network configuration options, including IP addresses and hostname. See “Configure the network” (page 139).
- **Change Password**—change the password for WLAN IP Telephony Manager. See “Change the password” (page 146).
- **Exit**—exit the menu.

--End--

Configure the network

Select **Network Configuration** on the **NetLink SVP-II System** screen to configure the IP address and other network settings of the WLAN IP Telephony Manager 2245. An optional Hostname and the IP address of TFTP Server containing the software update files are also configured here.

Configure the following Network Configuration screen fields with information provided by the network administrator:

- **IP Address:**—enter the complete IP address for the WLAN IP Telephony Manager 2245, including digits and periods.

ATTENTION
If this WLAN IP Telephony Manager 2245 is the master, it must have a static IP address configured. Do not use DHCP to assign the IP address of the master WLAN IP Telephony Manager 2245. Other WLAN IP Telephony Manager 2245 units in a multiple WLAN IP Telephony Manager 2245 environment can have their IP address assigned by DHCP.

Fore more information about the master WLAN IP Telephony Manager 2245, see “Master WLAN IP Telephony Manager 2245” (page 72).

- **Hostname:**—optional field. Change the default hostname of this WLAN IP Telephony Manager 2245, if desired. Hostname is for identification purposes only. Do not include spaces.

- **Subnet mask**—the subnet mask of the subnet.
- **Default Gateway**—the default gateway for the subnet.
- **SVP-II TFTP Download Master**—the IP address of the TFTP Server where the software update files are saved. Enter one of the following:
  - NONE—disables this function
  - IP address of the TFTP Server that transfers software updates to the WLAN IP Telephony Manager 2245

Copyright © 2003-2010 Nortel Networks. All Rights Reserved.

- **Primary DNS Server, Secondary DNS Server, DNS DomainDNS Server and DNS Domain**—used to configure Domain Name Services (DNS). Obtain the settings from the network administrator. Optionally, enter DHCP. This enables the DHCP client in the WLAN IP Telephony Manager 2245 to attempt to automatically obtain a valid IP address from the DHCP Server. The DHCP setting is only valid when the IP address is obtained from DHCP.
- **WINS Server**—the IP address of the Windows Name Services (WINS) Server. Obtain the settings from the network administrator. Optionally, enter DHCP. This enables the DHCP client in the WLAN IP Telephony Manager 2245 to attempt to automatically obtain a valid IP address from the DHCP Server. The DHCP setting is only valid when the IP address is obtained from DHCP.

  When WINS is configured, the WLAN IP Telephony Manager 2245 can translate hostnames to IP addresses. This means that when using Telnet, the WLAN IP Telephony Manager 2245 can be accessed using its hostname rather than its IP address.
- **Workgroup**—indicates whether a workgroup is configured in the WINS Server.
- **Syslog Server**—the IP address of the server where the system logs for the WLAN IP Telephony Manager 2245 are written. If a Syslog Server is configured, a message is sent to the Syslog Server when an alarm is generated. Enter one of the following:
  - NONE—disables this function
  - IP address of the Syslog Server
- **Maintenance Lock**—indicates whether the WLAN IP Telephony Manager 2245 is in Maintenance Lock mode.
- **Disable Telnet Service**—indicates whether a Telnet session can access the WLAN IP Telephony Manager 2245. The available options are:
  - **Y**—prevents a Telnet session from accessing the WLAN IP Telephony Manager 2245.
  - **N**—allows a Telnet session to access the WLAN IP Telephony Manager 2245.
- **Send/All**—in a system with multiple WLAN IP Telephony Manager 2245 units, the SendAll option is provided to speed configuration and ensure identical settings. The S=SendAll option enables configuration parameters of the selected field to be sent to every WLAN IP Telephony Manager 2245 on the LAN. SendAll can only be used after the IP address is configured on each WLAN IP Telephony Manager 2245 using a serial connection. If identical configuration parameters are to be used for all WLAN IP Telephony Manager 2245

Copyright © 2003-2010 Nortel Networks. All Rights Reserved.

units, configure only the IP address and custom hostname (if desired) on each WLAN IP Telephony Manager 2245 using the initial serial connection. Then connect through the LAN to this WLAN IP Telephony Manager 2245 and use SendAll to transmit identical configuration options of each field for all WLAN IP Telephony Manager 2245 units.

ATTENTION

If SendAll is used on the system, all passwords must be identical. Do not change the password at the initial configuration if the SendAll option is used. Use the default password and change it globally, if desired, after a LAN connection is established for all WLAN IP Telephony 2245 units.

If independent administration of each WLAN IP Telephony Manager 2245 is desired, the passwords can be set during initial configuration.

Save the configuration

Reset the WLAN IP Telephony Manager 2245 in order to save the configuration parameters. Follow the steps in Procedure 7 “Saving the configuration” (page 141) to save the configuration.

Procedure 7
Saving the configuration

Step	Action
1	Press **Esc** on the keyboard. If the WLAN IP Telephony Manager 2245 is in **Maintenance Lock**, a prompt appears asking if the configuration is to be saved.
2	Enter **Y**.
3	Alternatively, select the **Reset** option found in the **SVP-II Configuration** screen. Press **Esc**. See “Configure the WLAN IP Telephony Manager 2245” (page 144).

--End--

Changing the master IP address

To change the IP address of the master WLAN IP Telephony Manager 2245, change it in the **Network Configuration** menu and reboot the system.

The alias IP addresses can now be changed in each of the other WLAN IP Telephony Manager 2245 units without incurring an error.

Copyright © 2003-2010 Nortel Networks. All Rights Reserved.

Radio Settings

For information on the configuration of QoS radio settings, refer to the VIEW certified documents applicable to the access points present in your solution.

QoS Configuration

The handset supports the following three Quality of Service (QoS) modes:

- • SVP (Spectralink Voice Priority)
- • WiFi Standard (WMM-Power Save and WMM-Admission Control)
- • CCX (Cisco Client Extensions)

Configuring the AP for QoS is distinctly different depending what the desired QoS mode is.

Perform the following procedure to configure SVP QoS Policy.

Configuring SVP QoS Policy

Step	Action
1	In the navigation pane, click **SERVICES**.
2	Select **QoS** from the sub-menu.
3	At **Create/Edit Policy**, create and name a new QoS policy.
4	From to the drop-down list under **Apply Class of Service** (to the far right of **IP Protocol 119**), select **Voice <10ms Latency (6)**.
5	Click **Add** to add this classification to your new QoS policy.
6	Click **Apply**.
7	Under **Apply Policies to Interface/VLANs**, use the drop-down lists to apply the new QoS policy to: 1. **Incoming** for the **FastEthernet**. 2. **Incoming** and **Outgoing** for the **Radio0-802.11G** 3. **Incoming** and **Outgoing** for the **Radio1-802.11A** for the appropriate interfaces of VLAN.
8	Click **Apply**.

--End--

Copyright © 2003-2010 Nortel Networks. All Rights Reserved.

Perform the following procedure to configure WiFi Standard and CCX QoS Policy.

Configuring WiFi Standard and CCX QoS Policy

Step	Action
1	In the navigation pane, click **SERVICES**.
2	Select **QoS** from the sub-menu. ***Note:*** Assume that a DSCP value of 46 is used for voice packets and 40 for PBX control packets.
3	Name the policy in the **Policy Name** field. For example **WMM-PS**.
4	To customize voice priorities, select the **IP DSCP** field, enter **46** in the text field, select **Voice < 10ms Latency (6)** as the class of service, and click **Add**.
5	Likewise, to configure control packet priorities select the **IP DSCP** field, enter **40** in the text field, select **Controlled Load (4)** as the class of service, and click **Add**. This results in two classifications.
6	Click **Apply** in the **Create/Edit Policies** section of the screen.

--End--

Perform the following procedure to configure the Advanced tab.

Configuring the Advanced tab

Step	Action
1	Click the **ADVANCED** tab.
2	Under **QoS Element for Wireless Phones**, select the **Disable** option.
3	Disable **WiFi MultiMedia (WMM)**, which is set by default.
4	Click **Apply**.

--End--

Copyright © 2003-2010 Nortel Networks. All Rights Reserved.

Configure the WLAN IP Telephony Manager 2245

The WLAN IP Telephony Manager 2245 is configured on the **SVP-II Configuration** screen where the mode of the WLAN IP Telephony Manager 2245 is configured. This screen is also used to lock the WLAN IP Telephony Manager 2245 for maintenance and reset the WLAN IP Telephony Manager 2245 after maintenance.

The WLAN IP Telephony Manager 2245 automatically locks for maintenance if the IP address is changed. When a Maintenance Lock occurs, the WLAN IP Telephony Manager 2245 must be reset upon exit. All active calls are terminated during a reset.

Access the **SVP-II Configuration** screen from the **NetLink SVP-II System** menu. Scroll to **SVP-II Configuration** and press **Enter**.

Perform the desired SVP-II configuration.

- **Phones per Access Point**—enter the number of simultaneous calls supported for the AP type. AP specifications are described in "Compatible Access Points" (page 269).
- **802.11 Rate**—select Automatic to allow the wireless handset to determine its rate (up to 11Mbs). Select 1MB/2MB to limit the transmission rate between the wireless handsets and APs.
- **SVP-II Master**—the IP address of the master of the WLAN IP Telephony Manager 2245 group must be identified. Select one of the following identification options:
  - Enter the IP address of the master of the WLAN IP Telephony Manager 2245 in each WLAN IP Telephony Manager 2245 group. Include the periods used in the IP address.
  - Enter DHCP. Ensure that the IP address of the master WLAN IP Telephony Manager 2245 is configured in the DHCP server and configure the other WLAN IP Telephony Manager 2245 units to obtain the information from the DHCP server.
  - Enter DNS. Ensure that the IP address of the master WLAN IP Telephony Manager 2245 is configured in the DNS server and configure the other WLAN IP Telephony Manager 2245 units to retrieve this information from the DNS server.
- **First Alias IP Address and Last Alias IP Address**—enter the range of IP addresses that this WLAN IP Telephony Manager 2245 can use when acting as a proxy for the wireless handsets.

  If you install multiple WLAN IP Telephony Manager 2245 units, you must configure a different range of IP addresses for each WLAN IP Telephony Manager 2245. Use the following formula to determine how many addresses to configure for each WLAN IP Telephony Manager

Copyright © 2003-2010 Nortel Networks. All Rights Reserved.

2245:
(number of handsets/number of WLAN IP Telephony Manager 2245 units) + 30%

ATTENTION
All alias addresses must be on the same subnet as the WLAN IP Telephony Manager 2245. The IP addresses cannot be duplicated on other subnets or WLAN IP Telephony Manager 2245 units. There is no limit to the number of IP addresses that can be assigned, but the capacity of each WLAN IP Telephony Manager 2245 is 500 wireless handsets.

- **SVP-II Mode**—select NetLink IP.
- **Ethernet link**—select **auto-negotiate** unless there is a need to specify the link speed.
- **System Locked**—use this option to take the system down for maintenance. The default is N (No). Select Y (Yes) to prevent any new calls from starting. Enter N to restore normal operation.
- **Maintenance Lock**—the system automatically sets this option to Y (Yes) after certain maintenance activities that require a reset are performed, such as changing the IP address. Maintenance Lock prevents any new calls from starting. This option cannot be changed. It is automatically set by the system. Reset the WLAN IP Telephony Manager 2245 at exit to clear Maintenance Lock.
- **Inactivity Timeout**—use this option to configure the number of minutes that the administrative module can be left unattended before the system closes it. This number can be from 1 to 100. If the number is 0, the administrative module does not close due to inactivity.
- **QoS Configuration**—use this option to configure decimal values, from 0 to 63 (default 4), for all classes of traffic.

Table 22
Cisco QoS settings

Administration	4 (default)
WT (In Call)	46
WT (Standby)	26 (can also be 46 if using PTT)
RTP	46
PBX	26
Inter-SVP	46

Table 23
Nortel QoS settings

Administration	4 (default)
WT (In Call)	46

Copyright © 2003-2010 Nortel Networks. All Rights Reserved.

Table 23
Nortel QoS settings (cont'd.)

WT (Standby)	40 (can also be 46 if using PTT)
RTP	46
PBX	40
Inter-SVP	46

To ensure the system transmits voice packets efficiently and with minimal delay, you must configure the decimal value for voice packets higher than the value for data packets. The configurable classes are:

— Administration—used for Telnet, TFTP and other administrative traffic. This class can have the lowest priority because it does not require voice quality.

— WT (in call)—traffic requires voice quality. Configure this class with a higher priority than WT (standby).

— WT (standby)—traffic requires voice quality. Configure this class with a lower priority than WT (in call).

— RTP—traffic is audio traffic to IP PBX; it requires voice quality.

— PBX—traffic is not audio traffic to the PBX; voice quality is not required.

— Inter-SVP2— traffic requires voice quality. Configure this class with a priority equal to WT (in call).

- **Reset**—if this option is selected, a prompt appears to reset the WLAN IP Telephony Manager 2245 when you exit the SVP-II Configuration screen.
- **Reset all WLAN IP Telephony Manager 2245**—if this option is selected, all WLAN IP Telephony Manager 2245 units on the subnet are reset.

ATTENTION
Resetting the WLAN IP Telephony Manager 2245 terminates any calls in progress.

Change the password

Nortel recommends that the default password be changed. Follow the steps in Procedure 8 "Changing the password" (page 146) to change the default or existing password.

Procedure 8
Changing the password

Copyright © 2003-2010 Nortel Networks. All Rights Reserved.

Step	Action
1	Select **Change Password** from the **NetLink SVP-II System** menu. The **Change Password** screen appears.
2	Enter the old password, enter the new password, and confirm the new password. The password parameters are as follows: • must be more than four characters in length • first character must be a letter • other characters can be a letter or a number • dashes, spaces, and punctuation marks are not allowed (alphanumeric only)
3	Select **Set Password** and press **Enter**. Alternatively, press the S key on the keyboard. Record the password and keep it in a safe place.
	--End--

If you forget the password, use the steps in Procedure 9 “Changing a forgotten password” (page 147) to log on to the WLAN IP Telephony Manager 2245.

Procedure 9
Changing a forgotten password

Step	Action
1	Connect your terminal to the RS-232 port using a null-modem cable.
2	To communicate with the gateway, open a terminal emulation program, such as HyperTerminal.
3	Power cycle the WLAN IP Telephony Manager 2245.
4	After the log on prompt appears, within 60 seconds, enter the log on: `maint`
5	At the slnk > prompt, enter the password: `admin` A confirmation message appears to inform you that the password is changed to admin.

Copyright © 2003-2010 Nortel Networks. All Rights Reserved.

6 After the slnk > prompt reappears, enter:

```
exit
```

--End--

Proceed to configure the wireless handsets. For more information, see *WLAN Handsets Fundamentals (NN43001-505)*.

Common Parameters

The following tables list common parameters for the WLAN IP Telephony Manager. This section specifically deals with a Trapeze solution for more information on other solutions refer to VIEW documentation at www.polycom.com.

Configure Communication through the Web Server

The Trapeze Web interface is known as WebView. This interface provides rudimentary configuration and monitoring, but many of the configuration options need to be set through the command line interface.

See the following table for a set of commands enabling WebView. The embedded Web server uses HTTPS, so the configuration of the crypto functions is required.

Table 24
Common Parameters

Purpose	Command
Enable Web server	`set ip https server enable`
Generate keys for security. Assuming user name of **admin**, which is the default. Answer prompts as needed. Answer to Common Name prompt must be **admin.cert**	`crypto generate key admin 1024`
Generate self-signed certificate.	`crypto generate self-signed admin`

Configure VLAN, Ports and Security

Table 25
Common Parameters

Purpose	Command
Set controller name.	`set system name <Name>`
Set controller IP address.	`set system ip-address <IP Address>`

Copyright © 2003-2010 Nortel Networks. All Rights Reserved.

Table 25
Common Parameters (cont'd.)

Purpose	Command
Set controller default route.	`set ip route default <IP Address> <VLAN Number>`
Configure VLAN IP address.	`set interface <VLAN Number> ip <IP Address> <IP Mask>`
Configure VLAN on ports used for APs and connected to the LAN.	`set vlan 1 port <Port Number>`
Enable Power-Over-Ethernet on ports use for APs.	`set port poe <Port Number> enable`
Enable Telnet. Enabling Telnet is optional, but allows configuration through the CLI without requiring a serial cable.	`set ip telnet server enable`

Table 26
SMP Parameters

Purpose	Command
Place all SVP traffic (protocol 119) traffic in the class-of-service (CoS) queue 7.	`set security ac lip SVP permit cos 7 119 0.0.0.0 255.255.255.255 0.0.0.0 255.255.255.255`

(Optional) If data traffic is to be shared with voice traffic, it must be explicitly enabled.	`set security acl name svp permit 0.0.0.0 255.255.255.255 commit security acl svp`
	`set security acl map svp vlan 1 out`
	`set security acl map svp vlan 1 in`

Disable Internet Group Management Protocol (IGMP) snooping on a designated VLAN. IGMP snooping must be disabled when running SpectraLink Radio Protocol (SRP), which is used with the SpectraLink 8000 Telephony Gateway. SRP uses multicast packets to do an SRP Check-In. These packets are not forwarded through the Mobility Exchange Switch when IGMP snooping is enabled.	`set igmp disable vlan <name of vlan>`

Copyright © 2003-2010 Nortel Networks. All Rights Reserved.

Configure Radio Profile

The radio profile configuration is described below and divided between the two types of QoS supported by the handsets. The handsets and an AP radio can only support one type of QoS mode (WMM-Power Save or SVP) at one time. There is a section for configuring the AP radios common to both QoS modes and for each of the QoS modes.

The string **<profile name>** should be substituted with the radio profile name desired. The example configuration in the appendix uses **wmmps** for the WMM-Power Save QoS mode radio profile and **svp** for the SVP QoS mode radio profile.

Table 27
Common Parameters

Purpose	Command
Setting the DTIM interval to 2.	**set radio-profile <profile name> dtim-interval 2**
Prevent the AP form going off-channel to scan.	**set radio-profile <profile name> rf-scanning channel-scope operation** **set radio-profile <profile name> active-scan disable**
Disable auto tune power.	**set radio-profile <profile name> auto-tune power-config disable**

Table 28
WMM Parameters

Purpose	Command
Enalbe WMM-Power Save (UAPSD).	**set radio-profile <profile name> wmm-powersave enable**
Enable WMM QoS.	**set radio-profile <profile name> qos-mode wmm**
Enable Voice/Video access control, disable policing, and configure max-utilization for each of the WMM access category queues.	**set radio-profile <profile name> cac voice mode enable** **set radio-profile <profile name> cac video mode enalbe** **set radio-profile <profile name> cac best-effort mode disable** **set radio-profile <profile name> cac background mode disable** **set radio-profile <profile name> cac voice policing disable** **set radio-profile <profile**

Copyright © 2003-2010 Nortel Networks. All Rights Reserved.

Table 28
WMM Parameters (cont'd.)

Purpose	Command

	`name> cac video policing disable`
	`set radio-profile <profile name> cac best-effort policing disable`
	`set radio-profile <profile name> cac background policing disable`
	`set radio-profile <profile name> cac voice max-utlization 80`
	`set radio-profile <profile name> cac video max-utilization 20`
	`set radio-profile <profile name> cac best-effort max-utilization 0`
	`set radio-profile <profile name> cac background max-utilization 0`

Table 29
SVP Parameters

Purpose	Command
Enable SVP QoS.	`set radio-profile <profile name> qos-mode svp`

Configure Service Profile

Table 30
Common Parameters

Purpose	Command
Disable 11n aggregation.	`set service-profile <profile name> 11n frame-aggregation disable`

Table 31
WMM Parameters

Purpose	Command
Enable Proxy-ARP. This eliminates delays in audio at the start of a call and can be necessary for a phone in standby to ring when called.	`set service-profile <profile name> proxy-arp enable`

Copyright © 2003-2010 Nortel Networks. All Rights Reserved.

Table 32
WEP Parameters

Purpose	Command
Configure SSID name.	`set service-profile <profile name> ssid-name TALPHAWPA2`
Authentication set to open access.	`set service-profile <profile name> auth-fallthru last-resort`
Authentication set to shared access.	`set service-profile <profile name> share-key-auth enable`
Set to 40-bit WEP security.	`set service-profile <profile name> cipher-wep40 enable`
Set to 104-bit WEP security (called 128-bit in the phone).	`set service-profile <profile name> cipher-wep104 enable`
Choose the key index and the key. Note: if a key index greater than 1 is used, the lower keys must be filled with a value of the correct number of digits.	`set service-profile <profile name> wep key-index 1 key <either 10 ro 26 ASCI characters representing hexadecimal digits>`
Disable 802.1X Authentication.	`set service-profile <profile name> attr vlan-name default`
Associate the service profile with a VLAN.	`set service-profile <profile name> attr vlan-name default`

Table 33
WPA-PSK Parameters

Purpose	Command
Configure SSID name.	`set service-profile <profile name> ssid-name TALPHAWPA2`
Authentication set to open access.	`set service-profile <profile name> auth-fallthru last-resort`
Set to WPA security.	`set service-profile <profile name> cipher-tkip enable`
Enable WPA security.	`set service-profile <profile name> wpa-ie enable`
Configure Pre-Shared Key passphrase.	`set service-profile <profile name> psk-phrase <passphrase>`
Enable Pre-Shared Key Authentication.	`set service-profile <profile name> auth-psk enable`

Copyright © 2003-2010 Nortel Networks. All Rights Reserved.

Table 33
WPA-PSK Parameters (cont'd.)

Purpose	Command
Disable 802.1X Authentication.	`set service-profile <profile name> auth-dot1x disable`
Associate the service profile with a VLAN.	`set servie-profile <profile name> attr vlan-name default`

Table 34
WPA2-PSK Parameters

Purpose	Command
Confiure SSID name.	`set service-profile <profile name> ssid-name TALPHAWPA2`
Authentication set to open access.	`set service-profile <profile name> auth-fallthru last-resort`
Enable WPA2-PSK Security cipher (AES-CCMP).	`set service-profile <profile name> cipher-ccmp enable`
Enable WPA2 Security.	`set service-profile <profile name> rsn-ie enable`
Configure PSK passphrase.	`set service-profile <profile name> psk-phrase <passphrase>`
Enable Pre-Shared Key Authentication.	`set service-profile <profile name> auth-psk enalbe`
Disable 802.1X Authentication.	`set service-profile <profile name> auth-dot1X disable`
Associate the service profile with a VLAN.	`set servie-profile <profile name> attr vlan-name default`

Table 35
WPA2-Enterprise Parameters

Purpose	Command
Configure the SSID name.	`set servie-profile <profile name> ssid-name TALPHAX`

Enable WPA2-Enterprise (802.1X) Security.	`set service-profile <profile name> cipher-ccmp enable`
	`set service profile <profile name> rsn-ie enable`
	`set service-profile <profile name> attr vlan-name default`

Copyright © 2003-2010 Nortel Networks. All Rights Reserved.

Configure APs

Table 36
Common Parameters

Purpose	Command
Set AP model and port.	`se ap <ap#> port 1 model MP-422`
Configure B-Band Radio (known as radio 1). In this example, the B-Radio is disabled. The A-Band radio is known as radio 2.	`set ap <ap#> radio 1 mode disable`
Disable load balancing between APs. Repeat for all APs and radios.	`set ap <ap#> radio <radio#> load-balancing disable`
Configure A-Band Radio (known as radio 2). In this example, the A-Band radio is enabled, set to Channel 161 at 15dBm. The radio profile associated with the radio will be one that was configured for SVP or WMM-Power Save QoS.	`set ap <ap#> radio 2 channel 161 radio-profile <radio profile> mode enable tx-power 15`

Configure RADIUS Server Example (WPA2-Enterprise Only)

Table 37
Common Parameters

Purpose	Command
Configure a RADIUS server to be used by the Trapeze controller. Timeout, retransmit, and deadtime parameters can be customized as desired. The values in the command example are valid, but other values can also be used.	`set radius server <name of RADIUS server> address <IP Address of RADIUS server> timeout 5 retransmit 3 deatime 0 key <shared secret key>`
Create a server group.	`set server groups CiscoACS members CiscoACSBoulder`
Associate server group with an SSID configured for WPA2-Enterprise security using a server group as an external RADIUS server.	`set authentication dot1x ssid <SSID name> **pass-through CiscoACS`

Configure QoS

In addition to QoS parameters present in the radio and service profiles, there are system-wide settings. Only ingress (packets from the wire side of the switch) needs to be configured.

Copyright © 2003-2010 Nortel Networks. All Rights Reserved.

Table 38
Common Parameters

Purpose	Command
Set COS/DSCP Mappings for Voice packets. The specific values depend on how the call server is configured. Common values for DSCP values are 46 and 48.	`set qos dscp-to-cos-map <DSCP value> cos 6`
Set COS/DSCP Mappings for Control packets. The specific values depend on how the call server is configured. Common values for DSCP values are 26 and 40.	`set qos dscp-to-cos-map <DSCP value> cos 4`

Configure Subnet Roaming

If more than one MX switch is used, then subnet roaming needs to be configured.

To set up subnet roaming between two switches, a mobility domain must be configured on both switches. Choose one of the switches to be the seed MX switch. The IP addresses used in mobility domain configuration must use the system IP address of each switch.

The following commands are performed on the seed MX switch:

Table 39
Common Parameters

Purpose	Command

Configure the seed MX switch for a domain member.	`set system ip-address 1.1.1.1`
	`set mobility-domain mode seed domain-name <domain name>`
	`set mobility-domain member 1.1.3.1`

The following commands are performed on the other (member) MX switch:

Table 40
Common Parameters

Purpose	Command
Configure the member MX switch for a seed MX switch.	`set system ip-address 1.1.3.1` `set mobility-domain mode member seed-ip 1.1.1.1`
Disable IGMP snooping temporarily on the MX that does not have the VLAN statically configured.	`set igmp disable vlan <vlan name>`

Copyright © 2003-2010 Nortel Networks. All Rights Reserved.

Table 40
Common Parameters (cont'd.)

Purpose	Command
Clear an existing mobility domain before defining a new one.	**clear mobility-domain**
Check the mobility domain.	**show mobility-domain**

Copyright © 2003-2010 Nortel Networks. All Rights Reserved.

Administration and maintenance

This section contains information about the following topics:

- “Adding a WLAN IP Telephony Manager 2245 to the system” (page 157)
- “Replacing a WLAN IP Telephony Manager 2245” (page 158)
- “Removing a WLAN IP Telephony Manager 2245 from the system” (page 159)
- “Changing the master WLAN IP Telephony Manager 2245” (page 160)
- “View software version” (page 160)
- “Software updates” (page 161)
- “Wireless handset download messages” (page 164)

Adding a WLAN IP Telephony Manager 2245 to the system

When a WLAN IP Telephony Manager 2245 is added to the system, the change is seamless and does not affect wireless handset calling ability.

A new WLAN IP Telephony Manager 2245 is detected within two seconds of being added to the system (booted, configured, and connected). When detected, any wireless handset not on an active call is immediately forced to check out and check in again. Any wireless handset in a call immediately switches to the WLAN IP Telephony Manager 2245 assigned to provide its timing function. This switchover is not usually noticeable to the user because it is similar to a normal handoff between APs. When the wireless handset ends the call, it is forced to check out and check in again.

Checking in to the Gateway

When a wireless handset is checking in with the WLAN IP Telephony Manager that is providing the Gateway function (not necessarily the same WLAN IP Telephony Manager 2245 that is providing the timing function), the wireless handset is assigned its Alias IP address. Subsequently when the wireless handset checks in with the LTPS, the wireless handset identifies itself with its new Alias IP address to the Call Server. If the

Copyright © 2003-2010 Nortel Networks. All Rights Reserved.

wireless handset is checking in again and again, it can indicate a problem on the network, such as poor AP coverage for a user who is moving about. This information is useful when troubleshooting.

WLAN IP Telephony Manager 2245 failure

The self healing software enhancement eliminates the need for manual intervention if a WLAN Telephony Manager 2245 fails. The wireless handsets are configured with the IP address of a designated WLAN Telephony Manager 2245. As the wireless handsets register, they receive a list of IP addresses of other WLAN Telephony Manager 2245 in the network and they distribute among other WLAN Telephony Manager 2245 to share the load. This WLAN Telephony Manager 2245 becomes the registration point. The list of addresses automatically updates each time the wireless handset powers on.

If the WLAN Telephony Manager 2245 fails, the wireless handset drops active calls, then re-registers with another WLAN IP Telephony Manager 2245 in their list. The wireless handsets return to active state after this registration period. This failure does not affect other wireless handsets registered on the other WLAN IP Telephony Manager 2245 units.

The recovery period for the wireless handsets on the failed WLAN IP Telephony Manager 2245 is approximately 60 seconds.

The entire network is inoperative when new software downloads to the network of WLAN IP Telephony Manager 2245 units. When the download completes, the network comes back into service automatically.

This functionality requires WLAN IP Telephony Manager 2245 minimum software release 174.034, WLAN Handset 2210/2211/2212 minimum hardware version 97.071, and WLAN Handset 6120/6140 minimum hardware of 115.015. If any component is at an earlier release then the system works in the current master or slave mode.

The failed WLAN IP Telephony Manager 2245 displays an alarm on its front panel and on an Administrative Console (if used). Wireless handsets associated with the unit display "No SVP Response" until the wireless handsets re-register.

Replacing a WLAN IP Telephony Manager 2245

Failed master WLAN IP Telephony Manager 2245

If the master WLAN IP Telephony Manager 2245 fails, no telephone calls can be made or received on that subnet. To quickly restore functionality to the wireless telephone network, Nortel recommends changing the configuration of a slave WLAN IP Telephony Manager 2245 to the

Copyright © 2003-2010 Nortel Networks. All Rights Reserved.

configuration of the master. Then reset all the other slave WLAN IP Telephony Manager 2245 units. When they come back up, the slaves recognize the reconfigured slave as the new master.

Then follow the steps in Procedure 10 “Replacing a WLAN IP Telephony Manager 2245” (page 159) to replace the failed WLAN IP Telephony Manager 2245.

Replacing the failed WLAN IP Telephony Manager 2245

Follow the steps in Procedure 10 “Replacing a WLAN IP Telephony Manager 2245” (page 159) to replace the failed WLAN IP Telephony Manager 2245.

Procedure 10
Replacing a WLAN IP Telephony Manager 2245

Step	Action
1	Disconnect the power cables and LAN cables from the WLAN IP Telephony Manager 2245.
2	Remove the failed device from the wall or rack mount.
3	Mount the replacement device in the same manner that the failed device was mounted.
4	Connect the replacement device to the LAN and power supply.
5	Configure the replacement WLAN IP Telephony Manager 2245.
6	Download the software to the replacement WLAN IP Telephony Manager 2245.
7	Test the replacement device to ensure that it is installed and configured correctly. For detailed information about installing and configuring the WLAN IP Telephony Manager, see “Installation” (page 105) and “WLAN IP Telephony Manager 2245 configuration” (page 133).

--End--

Removing a WLAN IP Telephony Manager 2245 from the system

When a WLAN IP Telephony Manager 2245 is removed from the system, wireless handsets using the WLAN IP Telephony Manager 2245 are affected. If the removal of the WLAN IP Telephony Manager 2245 is intentional, lock and idle it before removing the WLAN IP Telephony Manager 2245.

Copyright © 2003-2010 Nortel Networks. All Rights Reserved.

When a WLAN IP Telephony Manager 2245 is removed from the system, the removal is detected within two seconds. Wireless handsets not in calls are immediately forced to check out and check in again.

Wireless handset scenarios

For wireless handsets on active calls, two possible scenarios can occur:

- If the removed WLAN IP Telephony Manager 2245 provided the gateway function for the wireless handset, the call is lost and the wireless handset is forced to check in again.
- If the removed WLAN IP Telephony Manager 2245 provided the timing function for the call, the call switches to another WLAN IP Telephony Manager 2245 to provide the timing function.

ATTENTION
During the two seconds while the loss of the WLAN IP Telephony Manager 2245 is being detected, the audio for the call is lost.

Changing the master WLAN IP Telephony Manager 2245

If the master WLAN IP Telephony Manager 2245 loses communication with the network, the wireless telephone system fails. All WLAN IP Telephony Manager 2245 units lock. All calls are lost and no calls can be placed.

Therefore, if the master WLAN IP Telephony Manager 2245 must be replaced, ensure the system can be shut down with minimal call interruption. Reset all WLAN IP Telephony Manager 2245 units after the master is replaced. If the IP address of the master WLAN IP Telephony Manager 2245 is changed, the new IP address must be reconfigured in all WLAN IP Telephony Manager 2245 units using that master.

View software version

The following sections describe how to view the software version of the hardware.

For the WLAN IP Telephony Manager 2245

To view the software versions for the WLAN IP Telephony Manager 2245, follow the steps in Procedure 11 “Viewing the software version” (page 160).

Procedure 11
Viewing the software version

Step	Action
1	From the WLAN IP Telephony Manager 2245 **NetLink SVP-II System** screen, select **System Status** and press **Enter**.

Copyright © 2003-2010 Nortel Networks. All Rights Reserved.

2 On the **System Status Menu** screen, scroll down to **Software Versions** and press **Enter**.

The Software Version Numbers screen displays the software version for each WLAN system component.

Ensure that the Functional Code version matches the latest version available from Nortel:

www.nortel.com/support

--End--

For the WLAN Application Gateway 2246

For information about viewing the software versions for the optional WLAN Application Gateway 2246, see Appendix A "Software versions" (page 214).

For a wireless handset

To display the software versions running on a wireless handset, power on the wireless handset and hold down the **Power On/Start Call** key

For the WLAN Handset 6120/6140, hardware Version is also an option on the Config menu.

Software updates

Nortel provides information about software updates. Download the software updates. You must download the file of Product Category: Wireless LAN, Product Name: Wireless Telephony Manager 2245, Content type: Releases. Obtain the precise Release, Status, and Title of the file from your next level of support. See www.nortel.com/downloadingcontent.

After obtaining the software updates from Nortel, transfer them to the TFTP Server accessed by the WLAN IP Telephony Manager 2245.

Update software on the WLAN IP Telephony Manager 2245

To update the software on the WLAN IP Telephony Manager 2245, reset it. When the WLAN IP Telephony Manager 2245 starts up, it compares its software version to the software version on the TFTP Server. The WLAN IP Telephony Manager 2245 downloads the software from the TFTP Server if the versions are different.

Copyright © 2003-2010 Nortel Networks. All Rights Reserved.



CAUTION
Always ensure that only the latest version of software is on the TFTP Server and that earlier software versions are deleted, moved, or renamed.

At startup, the WLAN IP Telephony Manager 2245 always uses TFTP, if configured in the 2245, to compare its software version with the version on the TFTP Server. If the versions are different, the WLAN IP Telephony Manager 2245 downloads the software version from the TFTP Server, even if it is an older version.

Lock the system

Always lock the WLAN IP Telephony Manager 2245 in the SVP-II Configuration screen before updating the software. Locking the WLAN IP Telephony Manager 2245 prevents new calls from starting.

Reset the WLAN IP Telephony Manager 2245 after the update is complete.

ATTENTION
All calls in progress are terminated when the WLAN IP Telephony Manager 2245 is reset.

Update software on the WLAN Application Gateway 2246

For information about updating the software on the optional WLAN Application Gateway 2246, see Appendix A “Software” (page 215).

Update software on a wireless handset

With the WLAN system, you can perform over-the-air transfer of software updates from the designated TFTP Server to the wireless handsets.

The downloader function in the wireless handset checks its software version every time the wireless handset is turned on. If there is any difference in the software version, the wireless handset immediately begins to download the update.

On a clear 802.11a/b/g channel, the download process takes one minute or less to complete.

If the TFTP Server cannot be reached at the time the wireless handset is powered on, resets, or comes back into a WLAN service area, the wireless handset tries a few times to contact the TFTP Server, and then gives up and uses the existing software.

If more wireless handsets are requesting TFTP service than the TFTP Server has ports available, or if the TFTP Server is unreachable or unavailable, the wireless handsets try a few times to reach the TFTP

Copyright © 2003-2010 Nortel Networks. All Rights Reserved.

Server, and then continues to use the existing software. In other words, it is not possible to guarantee that a wireless handset is using the latest software.

For example, it is not possible to guarantee that all wireless handsets are upgraded as a result of an isetResetAll command. To verify that a wireless handset is running the intended version of software, use the isetShow command to determine the software version.

From the Signaling Server or Voice Gateway Media Card, use the oam> or IPL> isetGet command to display a list of all currently registered wireless handsets that are running the old hardware version. Use this command on all LTPS Signaling Servers or Voice Gateway Media Cards that have IP Phones and wireless handsets currently registered:

oam> isetGet fwvsn==<old 221022112212 hardware version>

Software update (version 97.0701) for the WLAN Handsets 2210/2211/2212

To download version 97.0701 of the software for the WLAN Handsets 2210/2211/ 2212, follow Procedure 12 “Updating software for the WLAN Handsets 2210/ 2211/ 2212” (page 163). Version 97.070 is compatible with new or existing wireless handsets.

Procedure 12
Updating software for the WLAN Handsets 2210/ 2211/ 2212

Step	Action
1	Go to www.nortel.com.
2	Follow the instructions at www.nortel.com/downloadingcontent to download the following file: • Product Category: Wireless LAN, , • Product Name: Wireless Telephony Manager 2245 • Content type: Releases. Obtain the precise Release, Status, and Title of the file from your next level of support.
3	Select **Find Products > A-Z**.
4	Select **W**.
5	Scroll to **WLAN Handset 2210/2211/2212** and select **Software**.
6	Select **WLAN – Handsets 2210/2211 hardware version 97.070**.

--End--

Copyright © 2003-2010 Nortel Networks. All Rights Reserved.

For more information, see *WLAN Handsets Fundamentals (NN43001-505)*.

Displays

When the wireless handset is powered on, it displays a series of messages indicating that it is searching for new software, checking the versions, and downloading the software. During the download, a progress bar on the wireless handset display screen displays the progress of the download.

ATTENTION
While the wireless handset is updating the software, the NO SVC message displays, and the wireless handset must not be powered off. For approximately 10 seconds, the wireless handset cannot be powered off. A warning message appears during that time. If the warning message is not displayed, the wireless handset can be powered off without damage.

When the update is complete, the wireless handset displays the extension number, and is ready for use.

Wireless handset download messages

Normal download messages

When the wireless handset is powered on, it displays a series of messages indicating that it is searching for new software, checking the software versions, and downloading. The normal message progression is listed in Table 41 "Normal download messages" (page 164)

Table 41
Normal download messages

Message	Description
Checking Code	Wireless handset is contacting the TFTP Server to determine if the server has a newer version of software that must be downloaded.
Erasing Memory	Wireless handset has determined that a download must occur and is erasing the current software from memory. This message also displays a progress bar. When the progress bar fills the display line, the erase operation is complete.
Updating Code	Wireless handset is downloading new software into memory. This message also displays a progress bar. When the progress bar fills the display line, the update operation is complete on that file.

When the update is complete, the wireless handset displays the extension number, and is ready for use.

Download failure or recovery messages

Table 42 "Failure and recovery messages" (page 165) lists the display messages for the wireless handset that indicate a failure or recovery situation during the software download process.

Copyright © 2003-2010 Nortel Networks. All Rights Reserved.

Table 42
Failure and recovery messages

Message	Description
Server Busy	Wireless handset is attempting to download from a TFTP Server that is busy downloading other handsets and refusing additional downloads. The wireless handset automatically retries the download every few seconds.
TFTP Error (x):yy	A failure occurred during the TFTP download of one of the files. **(x)** = the file number that was being downloaded. **yy** = an error code describing the particular failure. Possible error codes are: • 01 = TFTP Server did not find the requested file. • 02 = Access violation (reported from TFTP Server). • 07 = TFTP Server reported No such user error. Check the TFTP Server configuration. • 81 = File put into memory did not CRC. The wireless handset attempts to download the file again. • FF = Timeout error. TFTP Server did not respond within a specified period of time.
Erase Failed	Download process failed to erase the memory in the wireless handset. This operation retries.
Waiting	Wireless handset has attempted an operation several times and failed, and is now waiting for a period of time before attempting that operation again.
Internal Error OE	OE = Error while writing the Flash (return wireless handset to Nortel).

Copyright © 2003-2010 Nortel Networks. All Rights Reserved.

Copyright © 2003-2010 Nortel Networks. All Rights Reserved.

Troubleshooting

This chapter contains information about the following topics:

- “Troubleshooting the WLAN IP Telephony Manager 2245” (page 167)
- “Troubleshooting the WLAN Application Gateway 2246” (page 170)
- “Troubleshooting the handset” (page 171)
- “Dropped calls” (page 173)
- “Troubleshooting coverage issues” (page 193)
- “Before calling Nortel Technical Support” (page 193)

Troubleshooting the WLAN IP Telephony Manager 2245

Use the System Status Menu screen to obtain information about system alarms and network status.

For information about how to connect to the WLAN IP Telephony Manager 2245 and access the System Status Menu screen from the NetLink SVP-II System screen, see “WLAN IP Telephony Manager 2245 configuration” (page 133).

Options on the System Status Menu screen provide a window into the real-time operation of the system components. Use this data to evaluate system function and to troubleshoot areas that can be experiencing problems.

On the System Status Menu screen, select from the following options:

- **Error Status**—displays alarm and error message information.
- **Network Status**—displays information about the Ethernet network to which the WLAN IP Telephony Manager 2245 is connected.
- **Software Versions**—lists the software versions for the WLAN IP Telephony Manager 2245.

Copyright © 2003-2010 Nortel Networks. All Rights Reserved.

Error Status screen

The Error Status screen displays any alarms that indicate some system malfunction. Some of these alarms are easily remedied. Others require a call to Nortel Technical Support.

From the System Status Menu screen, select Error Status. The Error Status screen displays active alarms on the WLAN IP Telephony Manager 2245. Table 43 "WLAN IP Telephony Manager 2245 active alarms and actions" (page 168) lists the alarms and the actions required to eliminate the alarm.

Table 43
WLAN IP Telephony Manager 2245 active alarms and actions

Alarm text	Action
Maximum payload usage reached	Reduce usage, clear alarm
Maximum telephone usage reached	Reduce usage, clear alarm
Maximum Access Point usage reached	Reduce usage, clear alarm
Maximum call usage reached	Reduce usage, clear alarm
SRP audio delayed	Reduce usage, clear alarm
SRP audio lost	Reduce usage, clear alarm
No IP address	Configure an IP address
WLAN IP Telephony Manager 2245 lost	Reduce usage or replace lost WLAN IP Telephony Manager 2245. Clear alarm.

Press **C** to clear all clearable alarms.

Network Status screen

The WLAN IP Telephony Manager 2245 is connected to the Ethernet network (LAN). The information about that connection is provided on the Network Status screen. The screen displays information about the Ethernet network. This information can help troubleshoot network problems.

To access the Network Status screen, select Network Status from the System Status Menu screen.

Use the Network Status screen to view the following information:

- **Ethernet Address**—media access control (MAC) address of the WLAN IP Telephony Manager 2245 (hexadecimal).
- **System Uptime**—the number of days, hours, and minutes since the WLAN IP Telephony Manager 2245 was last reset.

Copyright © 2003-2010 Nortel Networks. All Rights Reserved.

- **Net**—the type of connection to the Ethernet switch currently utilized. Displayed as 10 (10BaseT) or 100 (100BaseT) half-duplex, or full-duplex.
- **Max (maximum) calls**—number of calls that can be supported by the WLAN IP Telephony Manager 2245 (depends on network speed).
- **RX**—Ethernet statistics about the received signal during System Uptime.
  - **bytes**—number of bytes received
  - **packets**—number of packets received
  - **errors**—sum of all receive errors (long packet, short packet, CRC, overrun, alignment)
  - **drop**—packets dropped due to insufficient memory
  - **fifo**—overrun occurred during reception
  - **alignment**—non-octet-aligned packets (number of bits not divisible by 8)
  - **multicast**—packets received with a broadcast or multicast destination address
- **TX**—Ethernet statistics about the transmitted signal during System Uptime.
  - **bytes**—number of bytes transmitted
  - **packets**—number of packets transmitted
  - **errors**—sum of all transmit errors (heartbeat, late collision, repeated collision, underrun, carrier)
  - **drop**—packets dropped due to insufficient memory
  - **fifo**—underrun occurred during transmission
  - **carrier**—count of carrier losses during transmission
  - **collisions**—packets deferred (delayed) due to collision
- **SVP-II Access Points in Use**—number of APs in use by wireless handsets, either in standby or in a call. **Last** is current use, **Max** is the maximum number in use at one time.
- **SVP-II Access Points in Calls**—number of APs with wireless handsets in a call.
- **SVP-II Telephones in Use**—number of wireless handsets in standby or in a call.
- **SVP-II Telephones in Calls**—number of wireless handsets in a call.
- **SVP-II SRP Audio (Delay)**—SRP audio packets whose transmission is momentarily delayed

Copyright © 2003-2010 Nortel Networks. All Rights Reserved.

- **SVP-II SRP Audio (Lost)**—SRP audio packets dropped due to insufficient memory resources
- SVP-II SRP Audio
  - **Delay**—SRP audio packets whose transmission is momentarily delayed
  - **Lost**—SRP audio packets dropped due to insufficient memory resources

Software Version Numbers screen

The Software Version Numbers screen provides information about the software version currently running on the WLAN IP Telephony Manager 2245.

This information helps to determine if the most recent software version is running. This information assists Nortel Technical Support in troubleshooting software problems.

Speed or duplex mismatch

A duplex mismatch on the WLAN can cause the WLAN IP Telephony Manager 2245 to not operate properly. Double-check WLAN connections and interfaces to ensure that they are all configured as full-duplex.

In rare instances, the message Speed or Duplex mismatch error can occur during the bootup sequence of the IP Telephony Manager 2245.

If this situation occurs, verify all devices connected to the WLAN IP Telephony Manager 2245 are configured correctly and no duplex mismatch is found. If all configurations are correct, reboot the IP Telephony Manager 2245. The error message must be cleared.

Nortel recommends that you

- do not configure the Ethernet Link, on the SVP-II Configuration screen, to auto-negotiate.
- use either 100/full or 10/full, as is appropriate for the network.
- configure the ethernet switch port to match the 2245 Ethernet Link.

Troubleshooting the WLAN Application Gateway 2246

For information about troubleshooting the optional WLAN Application Gateway 2246, see “WLAN Application Gateway 2246” (page 195) “Configuring network parameters” (page 203).

Copyright © 2003-2010 Nortel Networks. All Rights Reserved.

Troubleshooting the handset

Transmission problems can result from any number of factors originating from the wireless LAN. Wireless handsets can exhibit transmission problems in several ways. They can cease functioning properly, display error messages, or display incorrect data. When using and troubleshooting wireless handsets, consider the following problem sources to determine the best method of approaching a specific situation.

Context

When troubleshooting a problem with a wireless handset, it is important to determine the context of when and where the problem occurred. Context includes the following:

- Was the wireless handset on an active call?
- Was the wireless handset moving or stationary?
- Was the wireless handset powering on or powering off?
- Was PTT being used?
- At what location did the problem occur?

Record this information and provide it to the system administrator or Nortel Technical Support.

Access Point problems

Most, but not all, wireless handset audio problems are related to AP range, positioning, and capacity. Performing a Site Survey as described in “Site survey” (page 51) can isolate the AP causing these types of problems. If the wireless handset itself is suspected, conduct a parallel site survey with a wireless handset that is known to be functioning properly.

The following are some situations that can cause wireless handset difficulties to occur:

- **In range/Out of range**—service is disrupted if a user moves outside the area covered by the WLAN APs. Service is restored if the user moves back within range. If a call drops because a user moves out of range, the wireless handset recovers the call if the user moves back into range within a few seconds.
- **Capacity**—in areas of heavy use, the call capacity of a particular AP can be filled. If this happens, the user hears three chirps from the wireless handset. The user can wait until another user terminates a call, or move within range of another AP and try the call again. If a user is on a call and moves into an area where capacity is full, the

Copyright © 2003-2010 Nortel Networks. All Rights Reserved.

system attempts to find another AP. Due to range limitations, this can be the same as moving out of range.

- **Transmission Obstructions**—before system and AP installation, the best location for APs for optimum transmission coverage is determined when a site survey is performed. However, small pockets of obstruction can still be present, or obstructions can be introduced into the facility after AP installation. This loss of service can be restored by moving out of the obstructed area, or by adding more APs.

Configuration problems

Certain problems are associated with improper configuration of either the WLAN IP Telephony 2245, the optional WLAN Application Gateway 2246, or the wireless handset.

Configuration problems are generally corrected by changing the configuration on the WLAN IP Telephony 2245, the WLAN Application Gateway 2246, or the wireless handset.

There can also be incorrect programming of the APs. For compatibility and configuration information about the APs in use at the site, see “Compatible Access Points” (page 269).

Duplex mismatch

A duplex mismatch on the WLAN can cause the wireless handsets to not operate properly. Double-check WLAN connections and interfaces to ensure that they are all configured as full-duplex.

No ring

It is possible in certain situations for a voice mail message to be left on a wireless handset without the wireless handset ever ringing. This situation could occur when a wireless handset is out of range of an AP for even a few seconds. If during the time the wireless handset is out of AP range and an incoming call is received, the incoming call receives the Call Forward No Answer (CFNA) treatment configured for that wireless handset, such as forwarding the incoming call to voice mail.

To prevent this situation from occurring, ensure adequate AP coverage in all areas where a wireless handset is used.

Far-end echo

Sometimes, when using the G.711 codec, echo might be perceptible at the far end, and be more severe when the wireless handset is in an environment with extreme background noise and the wireless handset volume is set to maximum volume.

Copyright © 2003-2010 Nortel Networks. All Rights Reserved.

To correct this problem, reduce the volume setting on the wireless handset, , the microphone gain or both.

You can change the microphone gain from the Standby Menu, Noise Mode.

Alternatively, if you experience this problem, consider using the G.729 codec.

Dropped calls

If calls are dropping, use the Site Survey mode of the wireless handset in the area where the problem occurred to determine if there is inadequate AP coverage in that area.

Wireless handset status messages

Wireless handset status messages provide information about the handset communication with the AP and Call Server. Table 44 "Wireless handset status messages" (page 173) summarizes the status messages, in alphabetical order.

Table 44
Wireless handset status messages

Message	Description	Action
3 chirps	Wireless handset is not able to communicate with the best AP, probably because that AP has no bandwidth available.	None. This is only a warning. The call is handed-off to the best AP after it becomes available.
Address Mismatch	Wireless handset software download files are incorrect or corrupted.	Download new software from the Nortel site. See “Software updates” (page 161).
ASSERT xxx.c Line yyy (For WLAN Handsets 2210/2211/2212 only.)	The handset has detected a fault from which it cannot recover.	Record the error information so that it can be reported. Turn the handset off, and then on again. If the error persists, try registering a different handset to this telephone port. If the error still persists, contact Nortel Technical Support and report the error.

Copyright © 2003-2010 Nortel Networks. All Rights Reserved.

Table 44
Wireless handset status messages (cont'd.)

Message	Description	Action
Assoc Failed xxxxxxxxxxxx	x...x = AP MAC address Handset association is refused by the AP; displays the MAC of the failing AP.	Check the handset and AP security settings. Ensure that the AP is configured per the Configuration Note. Try another AP.
Assoc Timeout xxxxxxxxxxxx	x...x = AP MAC address Handset did not receive an association response from the AP; displays the MAC of the failing AP.	Check the handset and AP security settings. Ensure that the AP is configured per the Configuration Note. Try another AP.
Auth Failed xxxxxxxxxxxx	x...x = AP MAC address Handset authentication is refused by the AP; displays the MAC of the failing AP.	Check the handset and AP security settings. Ensure that the AP is configured per the Configuration Note. Try another AP.
Auth Timeout xxxxxxxxxxxx	x...x = AP MAC address Handset did not receive an authentication response from the AP; displays the MAC of the failing AP.	Check the handset and AP security settings. Ensure that the AP is configured per the Configuration Note. Try another AP.
Bad Code Type xx Expected Code Type yy	xx, yy = software license types Handset software does not match the current handset license selection.	Download new software from the Nortel site. See "Software updates" (page 161).
Bad Config	Some needed configuration parameter has not been set.	Check all required wireless handset configuration parameters for valid settings.
Bad ESSID (For WLAN Handsets 2210/2211/2212 only.)	The wireless handset is configured for static ESSID (as opposed to Learn once or Learn always) and no ESSID is entered.	Enter an ESSID in the configuration settings or change to one of the Learn modes.
Bad SSID (For WLAN Handsets 6120/6140 only.)	The wireless handset is configured for static SSID (as opposed to Learn once or Learn always) and no SSID is entered.	Enter an SSID in the configuration settings or change to one of the Learn modes.

Copyright © 2003-2010 Nortel Networks. All Rights Reserved.

Table 44
Wireless handset status messages (cont'd.)

Message	Description	Action
Bad Local ID	The value of the Phase 1 Local ID type entered in the handset through the menus or the Configuration Cradle is improperly configured.	Enter a valid ID value.
Bad Local ID Type	The Phase 1 Local ID type entered in the handset through the menus or the Configuration Cradle is missing or invalid.	Enter a valid ID type. KEY ID is the only valid choice.
Bad Network IP	The value of the Remote Network IP address entered in the handset through the menus or the Configuration Cradle is missing or invalid.	Enter a valid remote network IP address.
Bad Network Mask	The value of the network mask for the Remote Network entered in the handset through the menus or the Configuration Cradle is missing or invalid.	Enter a valid network mask.
Bad Payload Type	The VPN server is not accepting some of the parameters passed to it by the handset. One common instance is if two handsets try to use the Client IP.	If the VPN Client IP is statically configured, ensure that the address assigned to the handset is unique. If using IKE Mode Config, ensure that the address entered in the VPN Server configuration for the handset or user is unique.
Bad Phintl File	The handset software download files are incorrect or corrupted.	Download new software from the Nortel site. See "Software updates" (page 161).
Bad Program File	The handset software download files are incorrect or corrupted.	Download new software from the Nortel site. See "Software updates" (page 161).
Bad Preshared Key	The value of the preshared key entered in the handset through the menus or Configuration Cradle is improperly configured.	Enter a valid preshared key value. For a Contivity VPN server, this is the password.

Copyright © 2003-2010 Nortel Networks. All Rights Reserved.

Table 44
Wireless handset status messages (cont'd.)

Message	Description	Action
Bad Tunneled IP	The value of the VPN Client IP address entered in the handset through the menus or the Configuration Cradle is configured for static IP and is missing.	Enter a valid client IP address.
Bad VPN Server IP	The VPN Server IP address entered in the handset through the menus or the Configuration Cradle is invalid.	Enter the IP address of the VPN server.
(battery icon), Low Battery message, and beep Battery Low Battery Low	Low battery	**In call**: the battery icon displays and a soft beep is heard when the user is on the wireless handset and the battery charge is low. User has approximately 15 to 30 minutes of battery life left. The **Battery Low** message indicates that the battery pack can be changed while the call is still in progress. For the WLAN Handsets 2210/ 2211/2212 only, do not press **Power Off/End Call**. Place the call on Hold or Park, quickly remove the discharged battery and replace with a charged battery, power on the handset and press **Power On/Start Call** to resume the call in progress. For the WLAN Handsets 6120/ 6140 only, do not press End. Place the call on Hold or Park, quickly remove the discharged battery and replace with a charged battery, power on the handset and press Start to resume the call in progress.

Copyright © 2003-2010 Nortel Networks. All Rights Reserved.

Table 44
Wireless handset status messages (cont'd.)

Message	Description	Action
		Not in call: The battery icon displays whenever the battery charge is low. The message **Low Battery** and a beep indicate a critically low battery charge when user is not on the wireless handset. The wireless handset does not work until the battery pack is charged.
Battery Failure	The battery pack is not functioning.	Replace the battery pack with a new or confirmed battery pack. Only the approved battery pack works.
Battery Failed	Battery pack is damaged or incompatible with the handset.	Replace the battery pack with a new or confirmed battery pack. Only the approved battery pack works.
Can't renew DHCP yyy.yyy.yyy.yyy	y...y = DHCP server IP address DHCP server is not responding to the initial renewal attempt.	Configuration problem. Check the IP address configuration in the DHCP server.
Charging ...	The wireless handset is charging in the Desktop Charger.	No action needed.
Charge Complete	The wireless handset is now fully charged.	No action needed.
Checking Code	Wireless handset is contacting the TFTP Server to determine if it has a newer version of software that must be downloaded.	None. This message usually only lasts for approximately one second. If message remains displayed, power off and contact Nortel Technical Support.
Checking DHCP IP	The wireless handset is retrieving DHCP information from the DHCP server.	None. This is for information only.
CRC Code Error	The software that is TFTP downloaded has a bad Cyclical Redundancy Code (CRC) check.	Try the download again. It is possible the software became corrupted during download. If the error repeats, check that the download image on the TFTP Server is not corrupted.

Copyright © 2003-2010 Nortel Networks. All Rights Reserved.

Table 44
Wireless handset status messages (cont'd.)

Message	Description	Action
Code Mismatch!	The software loaded into the wireless handset is incorrect for this model of telephone.	Verify that the License Management value is correct. Replace the software image on the TFTP server with software that is correct for the handset model.
DCA Timeout	The handset has detected a fault from which it cannot recover, possibly due to a failure to acquire any network.	Turn the handset off, and then on again. If the error persists, contact Nortel Technical Support and report the error.
DHCP Error (1-5)	DHCP Error 1	The wireless handset cannot locate a DHCP server. It tries every 4 seconds until a server is located.
	DHCP Error 2	The wireless handset has not received a response from the DHCP server to a request for an IP address. It retries until a DHCP server is found.
	DHCP Error 3	The server refuses to lease the wireless handset an IP address. It keeps trying.
	DHCP Error 4	The DHCP server offered the wireless handset a lease that is too short. The minimum lease time is 10 minutes. One hour is the minimum recommended lease time. The wireless handset stops trying. Reconfigure the DHCP server and power-cycle the wireless handset.
	DHCP Error 5	Failure during WEP Key rotation process (proprietary failure).

Copyright © 2003-2010 Nortel Networks. All Rights Reserved.

Table 44
Wireless handset status messages (cont'd.)

Message	Description	Action
DHCP Lease Exp yyy.yyy.yyy.yyy	y...y = DHCP Server IP address DHCP is not responding to renewal attempts. At least one renewal succeeded.	The wireless handset failed to renew its DHCP lease, either because the DHCP server is not running, or because the configuration is changed by the administrator. The wireless handset attempts to negotiate a new lease or display one of the DHCP errors (1-5).
DHCP NACK error yyy.yyy.yyy.yyy	y...y = DHCP Server IP address DHCP server explicitly refused renewal.	The DHCP lease currently in use by the wireless handset is no longer valid, which forces the wireless handset to restart. This problem resolves itself on the restart. If it does not, the problem is in the DHCP server.
DL Not On Sector	The handset software download files are incorrect or corrupted.	Download new software from the Nortel site. See "Software updates" (page 161).
DO NOT POWER OFF	The wireless handset is in a critical section of the software update.	None. Do not remove the battery or attempt to power off the phone while this message is displayed. Doing so can require the wireless handset to be returned to Nortel to be recovered.
Duplicate IP	The wireless handset has detected another device with its same IP address.	If using DHCP, check that the DHCP server is properly configured to avoid duplicate addresses. If using Static IP, check that the wireless handset is assigned a unique address.
Erase Failed	Download process failed to erase the memory in the wireless handset.	Operation retries but can eventually report the error int. error: 0F. Power cycle the wireless handset.

Copyright © 2003-2010 Nortel Networks. All Rights Reserved.

Table 44
Wireless handset status messages (cont'd.)

Message	Description	Action
Erasing memory	The wireless handset has determined that a download must occur and is erasing the current software from memory.	None. When the progress bar fills the display line, the erase operation is complete. Do not turn the handset off during this operation.
Error! [error details] (For the WLAN Handset 6120/6140 only)	A fatal software error is detected. All handset operation is halted and any call is lost.	This message appears during the Halt on Error mode. To capture the error message, reboot the handset and write down the information that is on the display.
Files Too Big	The handset software download files are incorrect or corrupted.	Download new software from the Nortel site. See "Software updates" (page 161).
Flash Config Error	Handset internal configuration is corrupt.	Perform the Restore Defaults operation from the administrator menu and reprogram, or reprogram using the Configuration Cradle.
Initializing	The wireless handset is performing a power-on initialization.	None. This is informational only.
Internal Err. # #	The wireless handset has detected a fault from which it cannot recover. OE=Error while writing the Flash (return handset to factory) OF = No functional code (contact Nortel Technical Support)	Record the error code so it can be reported. Turn the wireless handset off, and then on again. If the error persists, try registering a different wireless handset to this telephone port. If the error still persists, contact Nortel Technical Support and report the error.
Invalid ID Info	The VPN server did not recognize this user.	Make sure that the local ID (KEY ID) entered in the handset matches the key ID in the VPN server. For a Contivity VPN server, the local ID must match the username.

Copyright © 2003-2010 Nortel Networks. All Rights Reserved.

Table 44
Wireless handset status messages (cont'd.)

Message	Description	Action
Multiple SVP Svr yyy.yyy.yyy.yyy	y...y = WLAN IP Telephony Manager 2245 IP address Handset received responses from multiple WLAN IP Telephony Manager 2245 units; displays the IP address of one responding WLAN IP Telephony Manager 2245.	Happens if the handset is reconfigured to use a different WLAN IP Telephony Manager 2245 and then powered-down before the previous server has had time to determine that the handset is no longer connected to it. The problem usually corrects itself in about 30 seconds.
Must upgrade SW!	Handset software is incompatible with the hardware.	Download new software from the Nortel site. See "Software updates" (page 161).
Net Busy xxxxxxxxxxxx	x...x = AP MAC address Handset cannot obtain sufficient bandwidth to support a call; displays the MAC of the failing AP.	Try call again later.
No DHCP Server	Handset is unable to contact the DHCP server.	Check that DHCP is operational and connected to the WLAN or use Static IP configuration in the handset.
No ESSID (For the WLAN Handsets 2210/2211/ 2212 only.)	Attempted to run the site survey application without an ESSID configured.	Let the handset come completely up. Statically configure an ESSID in the Admin menu.
No SSID (For the WLAN Handsets 6120/6140 only.)	Attempted to run the site survey application without an SSID configured.	Let the handset come completely up. Statically configure an SSID in the Admin menu.
No Func Code	Handset software download files are incorrect or corrupt.	Reconfigured the handset to gain access to the WLAN and download new code.
No Host IP (Addr)	The wireless handset is configured for static IP (as opposed to use DHCP) and no valid host IP address (the wireless handset IP address) is entered.	Enter a valid IP address in the configuration settings or change to use DHCP.
No IP Address	Invalid IP address.	Check the IP address of the wireless handset and reconfigure if required.

Copyright © 2003-2010 Nortel Networks. All Rights Reserved.

Table 44
Wireless handset status messages (cont'd.)

Message	Description	Action
No Net Access	Cannot authenticate or associate with AP.	Verify the AP configuration. Verify that all the WEP settings in the handset match those in the APs.
No Net Found (For the WLAN Handsets 2210/2211/ 2212 only.)	This indicates any of the following:	
	• No radio link	Verify that the AP is turned on.
	• No ESSID—Autolearn not supported (or) incorrect ESSID	Verify the ESSID of the wireless LAN and enter or Autolearn it again, if required.
	• AP does not support appropriate data ranges	Check the AP configuration against the AP Configuration Note.
	• Out of Range	Try getting closer to an AP. Check to see if other handsets are working within the same range of an AP. If so, check the ESSID of the handset.
	• Incorrect WEP settings	Verify that all the WEP settings in the handset match those in the APs.
	• Incorrect Security settings	Verify that all the Security setting in the AP.
No Net Found (For the WLAN Handsets 6120/6140 only.)	This indicates any of the following:	
	• No radio link	Verify that the AP is turned on.
	• No ESSID—Autolearn not supported (or) incorrect SSID	Verify the SSID of the wireless LAN and enter or Autolearn it again, if required.
	• AP does not support appropriate data ranges	Check the AP configuration against the AP Configuration Note.
	• Out of Range	Try getting closer to an AP. Check to see if other handsets are working within the same range of an AP. If so, check the SSID of the handset.

Copyright © 2003-2010 Nortel Networks. All Rights Reserved.

Table 44
Wireless handset status messages (cont'd.)

Message	Description	Action
	• incorrect WEP settings	Verify that all the WEP settings in the handset match those in the APs.
	• Incorrect Security settings	Verify that all the Security setting in the AP.
No Net Found xxxxxxxxxxxx yy	x...x = AP MAC address yy = AP signal strength Handset cannot find a suitable AP; displays the MAC address and signal strength of the best nonsuitable AP found.	Check the AP and handset network settings, such as ESSID, (for the WLAN Handsets 2210/ 2211/2212), SSID (for WLAN Handsets 6120/6140), Security, Reg. domain and Tx power. Ensure that the APs are configured per the Configuration Note. Try Site Survey mode to determine a more specific cause.
No PBX Response	The wireless handset tried to send a message to the Call Server and failed to get a response.	Verify the Call Server is operational and connected to the network.
No Proposal	The handset and the VPN server cannot agree on a set of configuration parameters.	Check that the Diffie-Hellman group, phase 1 and phase 2 hashes, and the encryption algorithms configured on the handset are acceptable to the VPN server.
No Reg Domain	Regulatory Domain not set	Configure the Regulatory Domain of the handset.
No SVP IP	The wireless handset is configured for static IP (as opposed to use DHCP) and no valid WLAN IP Telephony Manager 2245 address is entered.	Enter a valid WLAN IP Telephony Manager 2245 IP address in the wireless handset configuration setting or change to use DHCP.

Copyright © 2003-2010 Nortel Networks. All Rights Reserved.

Table 44
Wireless handset status messages (cont'd.)

Message	Description	Action
No SVP Response yyy.yyy.yyy.yyy	y...y = WLAN IP Telephony Manager 2245 IP address The handset has lost contact with the WLAN IP Telephony Manager 2245.	This can be caused by bad radio reception or a problem with the WLAN IP Telephony Manager 2245. The handset keeps trying to fix the problem for 20 seconds, and the message can clear by itself. If it does not, the handset restarts. Report this problem to the system administrator if it keeps happening.
No SVP Server	Wireless handset cannot locate WLAN IP Telephony Manager 2245.	IP address configuration of WLAN IP Telephony Manager 2245 is wrong or missing.
	WLAN IP Telephony Manager 2245 is not working.	Check error status screen on WLAN IP Telephony Manager 2245.
	No LAN connection at the WLAN IP Telephony Manager 2245.	Verify WLAN IP Telephony Manager 2245 connection to LAN.
No SVP Server No DNS Entry	The handset is unable to perform DNS lookup for the WLAN IP Telephony Manager 2245; server had no entry for WLAN IP Telephony Manager 2245.	The network administrator must verify that a proper IP address is entered for the WLAN IP Telephony Manager 2245 DHCP option.
No SVP Server No DNS IP	The handset is unable to perform a DNS lookup for the WLAN IP Telephony Manager 2245; no IP address for DNS server.	The network administrator must verify proper DHCP server operation.
No SW Found	A required software component has not been properly identified.	Check that the handset license type has a corresponding entry in the slink_cfg.cfg file. Check that the pd11ccc.bin and pi110003.bin entries exist under this type in the slnk_cfg.cfg.
No UNIStim DHCP	The handset is unable to use DHCP to obtain the server information it requires to start up.	Verify the DHCP server configuration information. Verify network connectivity between the handset and the DHCP server.

Copyright © 2003-2010 Nortel Networks. All Rights Reserved.

Table 44
Wireless handset status messages (cont'd.)

Message	Description	Action
No VPN Server	The handset cannot find the VPN server.	Check that the value of the VPN Server IP address configured through the administration menu or the Configuration Cradle match the address of the VPN server.
Not Installed!	A required software component is missing.	Check that all required software files are on the TFTP Server, if over-the-air downloading is being used. If the error repeats, contact Nortel Technical Support.
Payload Malfmd	The handset cannot understand an encrypted message from the VPN Server (or vice-versa). This is likely to be a mismatch in the security parameters such as preshared key, Diffie-Hellman group, hash and encryption algorithms.	Check the Diffie-Hellman group, the phase 1 and phase 2 hashes, and encryption configuration.
Press End Call	The call has ended.	Press the Power Off/End Call key to return to standby mode.
Restart Command	The wireless handset received a restart command from the Call Server.	None. The wireless handset automatically restarts in a few seconds.
RTP Open Failed	The handset is unable to open the requested RTP or RTCP socket.	Reboot the handset. If the error repeats, contact Nortel Technical Support.
Select License	The correct protocol has not been selected from the license set.	Using the administrative menus, select one license from the license set to allow the wireless handset to download the appropriate software.
Server Busy	Wireless handset is attempting to download from a TFTP Server that is busy downloading other devices and refusing additional downloads.	None. The wireless handset automatically retries the download every few seconds.

Copyright © 2003-2010 Nortel Networks. All Rights Reserved.

Table 44
Wireless handset status messages (cont'd.)

Message	Description	Action
Server Unavailable. Restarting... (For the WLAN Handset 6120/6140 only)	An error caused the handset to lose the call. It is trying to restart and return to standby mode.	Occurs during Restart on Error mode. The handset is attempting to register with the PBX and resume normal operation. Error details may be available through the Syslog Server and by download with the Handset Administration Tool.
SKT Open Failed	Socket open fail. Occurs when the handset tries to connect to the call server, but there is no response. If resiliency is active, the handset keeps trying.	If the call server is inoperative and resiliency is not active, or the handset cannot locate a backup call server, turn off the handset and repair the primary call server. Nortel recommends that you reconfigure the backup call server to be the primary call server if the repair is more time-consuming than the reconfiguration.
Storing Config	Handset is storing changes to handset configuration.	None. Informational message only. The handset can display this briefly following a configuration change or software download.
SVP Service Rej.	The WLAN IP Telephony Manager 2245 has rejected a request from the wireless handset.	The wireless handset restarts and attempts to reregister with the WLAN IP Telephony Manager 2245, which usually fixes the problem. Report this to the administrator if it keeps happening.
System Busy yyy.yyy.yyy.yyy (with busy tone)	y...y = SVP or GW IP Address Gateway or WLAN IP Telephony Manager has reached call capacity; displays the IP address of the gateway WLAN IP Telephony Manager 2245.	All call paths are in use; try call again in a few minutes.

Copyright © 2003-2010 Nortel Networks. All Rights Reserved.

Table 44
Wireless handset status messages (cont'd.)

Message	Description	Action
System Locked (with busy tone)	WLAN IP Telephony Manager 2245 is locked. Gateway is locked.	Try call again later. System is locked for maintenance.
TFTP ERROR(x):yy	A failure occurred during a TFTP software download. **(x)** = the file number that was being downloaded; **yy** = an error code describing the particular failure. Possible error codes are: • 01 = TFTP Server did not find the requested file. • 02 = Access violation (reported from TFTP Server). • 07 = TFTP Server reported No such user error. • 81 = File put into memory did not CRC. • FF = Timeout error. TFTP Server did not respond within a specified period of time.	Error code 01, 02 or 07—check the TFTP Server configuration. Error code 81—the wireless handset attempts to download the file again. For other messages, power off the wireless handset, and then turn it on again to retry the download. If the error repeats, note it and contact Nortel Technical Support.
Too Many Errors	The handset continues to reset and cannot be recovered.	Fatal error. Return handset to Nortel.
Unknown xx:yy:zz	A phrase is missing from your phintl file.	Download new software from the Nortel site. See "Software updates" (page 161).
Updating Code	Wireless handset is downloading new software into memory. The number icons at the bottom of the display indicate which file number is currently being downloaded. This message also displays a progress bar. When the progress bar fills the display line, the update operation is complete on that file.	None. When the progress bar fills the display line, the update operation is complete on that file. Do not turn off the handset during this operation.

Copyright © 2003-2010 Nortel Networks. All Rights Reserved.

Table 44
Wireless handset status messages (cont'd.)

Message	Description	Action
VPN Error: xxxx	The VPN server returned an information message with a code of xxx.	
Waiting	Wireless handset has attempted some operation several times and failed. It is now waiting for a period of time before attempting that operation again.	None. The wireless handset is waiting for a specified period of time before attempting that operation again.
Watchdog Timeout	The wireless handset failed to hear from the Call Server within the watchdog timeout interval.	Verify the Call Server is operational and connected to the network.
Wrong Code Type	The software loaded into the handset is incorrect for this model of handset.	Verify that the license type is set correctly. If the license type is correct, replace the software image on the TFTP server with the software that is correct for the handset model.

Using Call Server overlay commands

The following sections provide information about Call Server overlay commands.

LD 32 IDU command

For the handsets, the IDU command outputs the following specific information:

- Release code: Rls: 6 (2210), Rls: 7 (2211) or Rls: 8 (2212)
- NT Code: NTTQ4010 (2210), NTTQ5010 (2211) or NTTQ69AA (2212)
- Software Version has different format: <Version>.<Issue> FWSW:097.070 (or later)
- The IP address is the alias IP address of the wireless handset that is provided by the WLAN IP Telephony Manager 2245. The MAC address is the MAC address of the wireless handset. In other words, the MAC address and the IP address are not related.

In the following example, 61 0 is an IP Phone 2004 and 62 2 is a WLAN Handset 2211.

Copyright © 2003-2010 Nortel Networks. All Rights Reserved.

```
.idu 61 0
I2004 TN: 061 0 00 00 V
TN ID CODE: i2004
ISET MAC ADR: 00:60:38:76:41:C7
ISET IP ADR: 192 .168 .010 .100
LTPS IP ADR: 047 .011 .214 .165
MANUFACTURER CODE: [NAME]
MODEL:
NT CODE: NT2K00GI
COLOR CODE: 66
RLS CODE: 0
SER NUM: 7641C7
FWSW VERSION: 0602B59
.idu 62 2
I2004 TN: 062 0 00 02 V
TN ID CODE: i2004
ISET MAC ADR: 00:90:7A:01:7E:47
ISET IP ADR: 192 .168 .010 .200
LTPS IP ADR: 047 .011 .214 .165
MANUFACTURER CODE: [NAME]
MODEL:
NT CODE: NTTQ5010
COLOR CODE: 66
RLS CODE: 7
SER NUM: 017E47
FWSW VERSION: 097.021
```

LD 32 STAT command

The wireless handsets are shown REGISTERED in the standby and active modes. In the following example, 61 0 is an IP Phone 2004 and 62 2 is a WLAN Handset 2211 in the standby mode.

```
.stat 61 0
IDLE REGISTERED 00
.stat 62 2
IDLE REGISTERED 00
```

LD 117 Inventory command

In the inventory report, the wireless handsets have a specific release code and NT code, similar to the IDU command output. In the following example, 61 0 is an IP Phone 2004 and 62 2 is a WLAN Handset 2211.

```
=> inv prt sets
Set inventory:
17 10 2003 8 17 21, 17 10 2003 8 17 22, 6
i2004, 61 00, i2004 NT2K00GI 66 0 7641C7, I2004 , 6000
i2004, 62 02, i2004 NTTQ5010 66 7 017E47, I2211 , 6502
```


Copyright © 2003-2010 Nortel Networks. All Rights Reserved.

LD 117 STIP command

The STIP command can be used for wireless handsets; however, the wireless handset alias IP address appears as the TERMIP in the command output, instead of physical IP address. In the following example, the 192.168.10.200 is an alias IP address assigned by the WLAN IP Telephony Manager 2245.

```
TN HWID STATUS HOSTIP TERMIP PORT
_______ ____________________________________ _______ ___________
____________ ________
0x600a 000000000000003000907a017e476607 REG 47.11.214.165
192.168.10.200 0x1450
CAPS
__________
0x00000000
--------------------------------
codec bdwth(k) codecCaps desc
--------------------------------
4 190 0x00000000 1
3 190 0x00000000 1
17 47 0x00000001 1
value = 537232412 = 0x2005841C
```

For information about more CLI commands, see “Zones” (page 89).

TPS CLI commands

The following sections describe TPS command line interface (CLI) commands.

dsetShow command

In the **dsetShow** command output, the handsets have a specific Hardware ID. The alias IP address is output, not the physical wireless handset IP address.

In the following example, the IP Phone 2004 has an IP address of 192.168.10.100 and the WLAN Handset 2211 has an alias IP address of 192.168.10.200. The syntax of the Hardware ID is as follows:

- first two digits—Manufacturer Location. Manufacturer Location is 18 for the IP Phone 2004 and 30 for the WLAN Handset 2211.
- next six digits—Manufacturer Code. The Manufacturer Codes are defined as follows:
  - IP Phone 2004 Phase 1—006038
  - IP Phone 2004 Phase 2—000ae4
  - WLAN Handset 2210—00907a

Copyright © 2003-2010 Nortel Networks. All Rights Reserved.

— WLAN Handset 2211—00907a

— WLAN Handset 2212—00907a

- last two digits—Release Code. The Release Codes are defined as follows:

  — IP Phone 2004 Phase 1—0

  — IP Phone 2004 Phase 2—2

  — WLAN Handset 2210—0x06

  — WLAN Handset 2211—0x07

  — WLAN Handset 2212—0x08

```
-> dsetShow
TN IP Address Hardware ID TermType
---- --------------- ------------------ ----------
6004 192.168.10.100 180060387641c76600 i2004
600A 192.168.10.200 3000907a017e476607 i2004
value = 0 = 0x0
```

e2dsetShow command

The **e2dsetShow** command is used for the handsets in the same manner as for the IP Phones.

isetCount and isetGet

Use the alias IP address of the handsets in the expression string of the **isetCount** and **isetGet** commands, not the physical IP address. The following is an example of the **isetGet** output for the WLAN Handset 2211.

```
->isetGet "IP == 192.168.10.200"
IP Address Type RegType State Up Time Set-TN Regd-TN HWID
FWVsn
---------- ----- ------- ----- ------- ------- -----
------------ ---------
192.168.10.200 i2004 Regular online 0 00:12:00 062-02
062-02 3000907a017e476607 097.021

UNIStimVsn SrcPort DstPort
--------- ------ ------
2.6 5100 5000
```

isetReset and isetResetAll

The **isetReset** command can be used to reset the wireless handsets by specifying the wireless handset alias IP, not the physical IP address:

Copyright © 2003-2010 Nortel Networks. All Rights Reserved.

```
-> isetReset "192.168.10.200"
value = 0 = 0x0
```

isetShow, isetShowByTN, and isetShowByIP

Similar to the **dsetShow** command, the wireless handset outputs its specific hardware ID (see **dsetShow**) and alias IP, not the physical IP address. The FW version has a different format <Version>.<Issue> in this output.

In the following example, the telephone with TN 062-02 is the WLAN Handset 2211.

```
-> isetShow
Set Information
---------------
IP Address Type RegType State Up Time Set-TN Regd-TN
---------- ---- ----- ---- ----- ----- -------
192.168.10.100 i2004 Regular online 4 22:59:22 061-00
061-00

HWID FWVsn UNIStimVsn SrcPort DstPort
---------------- ---- -------- ----- -----
180060387641c76600 0602B59 2.8 5100 5000

IP Address Type RegType State Up Time Set-TN Regd-TN
---------- ---- ----- ---- ----- ----- -------
192.168.10.200 i2004 Regular online 0 02:03:22 062-02
062-02

HWID FWVsn UNIStimVsn SrcPort DstPort
---------------- ----- ------- ----- ------
3000907a017e476607 097.021 2.6 5100 5000
```

umsKernalJobsShow and umsUpgradeAll

The umsKernalJobsShow and umsUpgradeAll commands cannot be used to monitor and originate software upgrades for wireless handsets since the wireless handsets are upgraded using a different mechanism without the help of the UMS subsystem. For information about how to monitor and originate the software upgrade, see the documentation for the TFTP server used by the wireless handsets.

umsPolicyShow and umsUpdatePolicy

The IP Phone 2004 policy used in these commands is not applicable to handsets, even though they are configured as IP Phones 2004 in the IP Line software. The wireless handsets are upgraded using a different mechanism without the help of the UMS subsystem.

Copyright © 2003-2010 Nortel Networks. All Rights Reserved.

usiLibTrace

The **usiLibTrace** utility can be used to monitor UNIStim messages from the wireless handsets by entering the alias IP address, not the wireless handset physical IP address.

```
-> usiLibTraceOn "192.168.10.200", 255, 255
value = 0 = 0x0
```

Determining alias IP addresses

When diagnosing network problems, (for example, to ping the wireless handset), it is useful to know the mapping between the alias IP addresses as displayed by various Call Server commands and the physical IP address of the wireless handset. There is no single command that provides this information; however, the administrator can determine it in two ways:

1. If the wireless handset IP address is statically configured, the administrator can look at the IP address of the wireless handset using the Admin menu, which is available when the wireless handset is powered on.
2. After the wireless handset is operating and in standby mode, the administrator can look at the User Preferences menu to find the alias IP address of the wireless handset.

For more information, see *WLAN Handsets Fundamentals (NN43001-505)*.

Troubleshooting coverage issues

Coverage issues are best resolved by adding and relocating APs as required. Overlap issues can be resolved by reassigning channels to the APs or by relocating the APs. For more information, see “Troubleshooting WLAN IP Telephony installations” (page 221).

Before calling Nortel Technical Support

To facilitate the handling of the call, obtain the following information and have it available when placing a call to Nortel Technical Support:

- software versions on the wireless infrastructure, such as the APs
- pre-installation site survey, including typical network information and the wireless site survey information from the site survey tool such as the Nortel Site Survey Tool
- paper-based layout of AP placement
- a more refined site survey of the area having issues using the wireless handset in Site Survey mode
- list of the PBX and LTPS software versions, including a list of patches

Copyright © 2003-2010 Nortel Networks. All Rights Reserved.

- WLAN IP Telephony Manager 2245 and handset hardware versions
- WLAN IP Telephony Manager 2245 configuration menu screen captures
- any error messages displayed in the Error Status screen of the System Status Menu of the WLAN IP Telephony Manager 2245
- any error messages displayed on the handset display screen
- content of the Syslog Server (if using)
- log of the DHCP Server (if available), if using DHCP

Copyright © 2003-2010 Nortel Networks. All Rights Reserved.

Appendix WLAN Application Gateway 2246

This appendix contains information about the following topics:

- "Introduction" (page 195)
- "Third-party applications" (page 198)
- "Installation" (page 199)
- "Configuration" (page 201)
- "Continuing configuration through Telnet" (page 207)
- "System status" (page 212)
- "Certification testing" (page 215)
- "Software" (page 215)
- "Planning Worksheet for Handsets" (page 218)
- "Free the serial port for administrative purposes" (page 219)

Introduction

With the optional WLAN Application Gateway 2246, third-party applications can communicate directly with a maximum of 10,000 handsets. With the WLAN Application Gateway 2246, users can retrieve and respond to information using their wireless handsets.

The WLAN Application Gateway 2246 is available in several scaled capacity levels. The base unit NTTQ65AB enables 64 wireless handsets.

Table 45
Model numbers with maximum number of users

Model number	Maximum number of users
NTTQ65AB	64
NTTQ65BA	128

Copyright © 2003-2010 Nortel Networks. All Rights Reserved.

Table 45
Model numbers with maximum number of users (cont'd.)

Model number	Maximum number of users
NTTQ65CA	256
NTTQ65DA	512
NTTQ65EA	1024
NTTQ65FA	10000

In Figure 25 "WLAN Application Gateway 2246 connections" (page 196), a WLAN Application Gateway 2246 is connected to the site LAN through an Ethernet switch. The connection to the Application Server can be accomplished by a direct connection (RS-232) or through the Ethernet connection. Only one of these connections can be used at one time.

The IP address of the WLAN Application Gateway 2246 must be configured during initial configuration. After the IP address is established, the WLAN Application Gateway 2246 can be accessed by the Application Server through the RS-232 port or through the LAN using Telnet.

Figure 25
WLAN Application Gateway 2246 connections

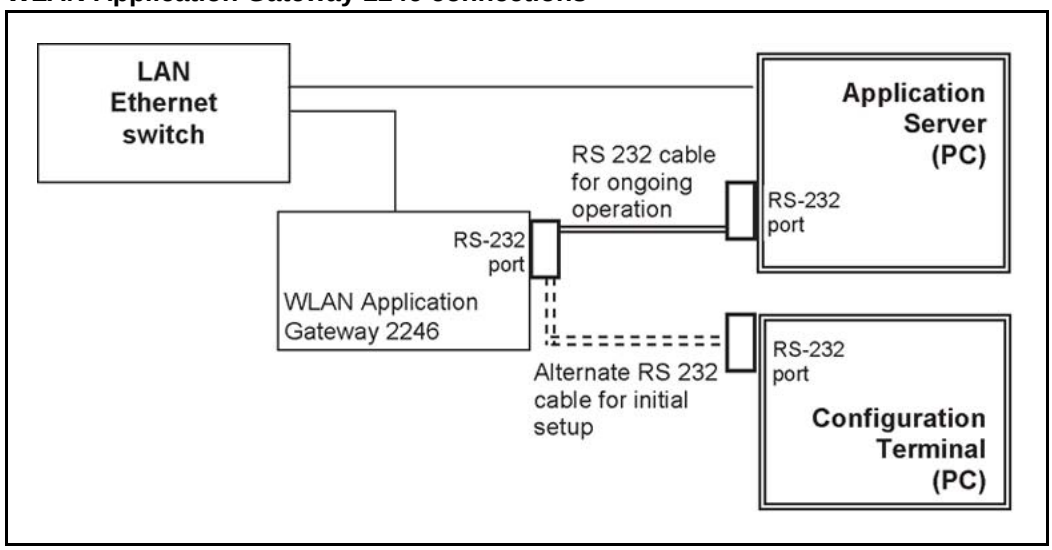

System overview

At a typical site, the WLAN Application Gateway 2246 is connected to the Ethernet switch through an RJ-45CAT 5 cable. The Application Server is connected through the RS-232 port. The client's system can include a LAN and its Application Server with a TAP connection to a communications device such as a paging controller.

Copyright © 2003-2010 Nortel Networks. All Rights Reserved.

Figure 26
Ethernet switch connections

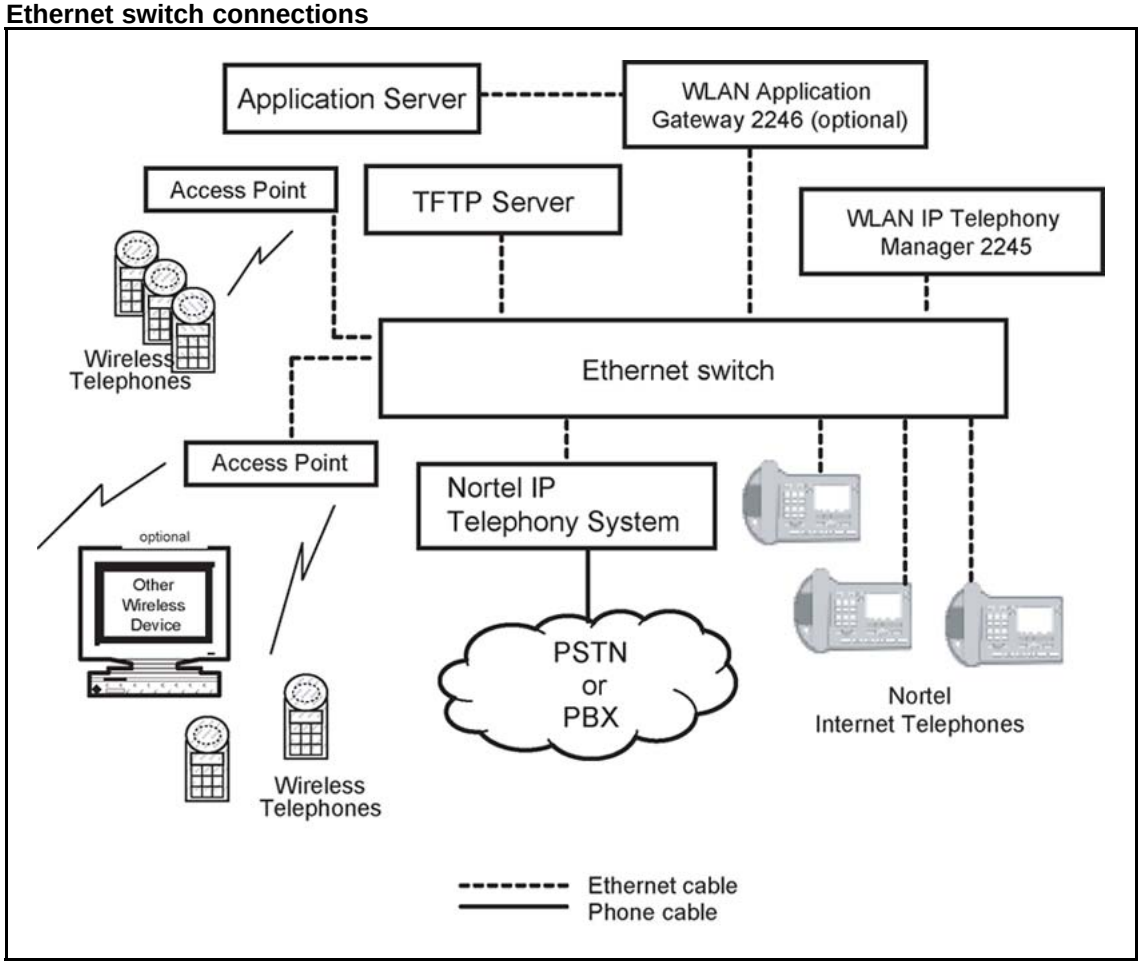

Front panel

The WLAN Application Gateway 2246 models have similar front panel indicators. See Figure 27 "NTTQ65xx" (page 198).

The NTTQ65xx is available in scaled increments to support up to 10 000 users.

Copyright © 2003-2010 Nortel Networks. All Rights Reserved.

Figure 27
NTTQ65xx

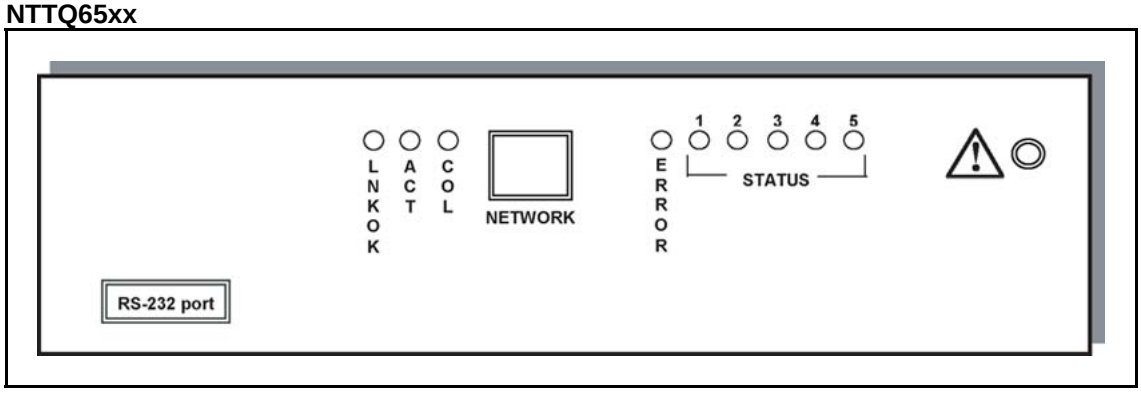

- Network Link LEDs
  - **(L)NKOK**—lit when there is a network connection, (for example, LINK OK).
  - **(A)CT**—lit if there is system activity.
  - **(C)OL**—lit if there are network collisions.
  - **(E)RROR**—lit when the system has detected an error.
- Status LEDs—indicate system messages and status. See Figure 27 "NTTQ65xx" (page 198).
  - **1**—heartbeat, indicates the WLAN Application Gateway 2246 is running
  - **2, 3, and 4**—currently unused
  - **5**—System master

Third-party applications

The WLAN Application Gateway 2246 enables third-party software applications to communicate with the wireless telephones. Users can receive and retrieve important information from external systems. Some examples of applications in various markets are as follows:

Health care:

- access patient pharmaceutical records
- receive text messages from nurse call systems
- receive e-mail from remote test labs

Retail:

- look up merchandise prices
- access inventory

Copyright © 2003-2010 Nortel Networks. All Rights Reserved.

Manufacturing:

- relay alarms to handsets from malfunctioning equipment
- enable managers to monitor production output

Call Centers:

- review queue statistics
- receive alarms when metrics exceed thresholds

Nurse-call systems

In the health care market, the following nurse-call system manufacturers have applications known to be compatible with the WLAN Application Gateway 2246:

- Dukane Corporation
- Emergin WirelessOffice
- Globestar
- Indyme Corporation
- Jeron Nurse Call
- OnSite Communications
- Rauland Nurse Call
- SoloTraxx
- Wescom Nurse Call

Installation

Installing with a new system

If this is a new system installation, complete Procedure 13 “Installing the WLAN Application Gateway 2246” (page 200) when the rest of the system is tested.

Installing in an existing system

If the WLAN Application Gateway 2246 is being added to an existing system, the entire system must be reset before the WLAN Application Gateway 2246 can be used.

Follow the steps in Procedure 13 “Installing the WLAN Application Gateway 2246” (page 200) to install the WLAN Application Gateway 2246.

Copyright © 2003-2010 Nortel Networks. All Rights Reserved.

Procedure 13
Installing the WLAN Application Gateway 2246

Step	Action
1	Place the WLAN Application Gateway 2246 on a shelf or convenient location.

ATTENTION
The WLAN Application Gateway 2246 is physically connected to the Ethernet switch and can be placed in any convenient location within 325 ft (100 m) of the switch. It can also be rack-mounted.

2	Connect the power plug from the WLAN Application Gateway 2246 power adapter to the power jack on the front (or rear) of the box.

ATTENTION
Use only the power adapter provided by Nortel.

3	Plug the power adapter into an outlet or outlet strip.
4	Apply power to the WLAN Application Gateway 2246.
5	Ensure that the ERROR LED is off and LED 1 is blinking.

--End--

Configuring the WLAN Application Gateway 2246 IP address

You must connect to the WLAN Application Gateway 2246 through a serial connection to configure the IP address and the network parameters. After this is done, you can perform administration and further configuration through a Telnet connection using the Administration Console.

Follow the steps in Procedure 14 “Connecting to the WLAN Application Gateway 2246 through a serial port” (page 200) to make a serial connection to the WLAN Application Gateway 2246.

Procedure 14
Connecting to the WLAN Application Gateway 2246 through a serial port

Step	Action
1	Using a DB-9 female, null-modem cable, connect the WLAN Application Gateway 2246 to the serial port of a terminal or PC.
2	Run a terminal emulation program (such as HyperTerminal) or use a VT-100 terminal with the following configuration: • Bits per second: 9600 • Data bits: 8

Copyright © 2003-2010 Nortel Networks. All Rights Reserved.

- Parity: None
- Stop bits: 1
- Flow control: None

ATTENTION
If you use Windows 2000, you must install Service Pack 2 to enable the use of HyperTerminal™.

3 Reset the system.

The following appears on the terminal display:

04830130

4 Type the following command using the terminal or PC keyboard:

```
0255CC [CTRL M] [CTRL J]
```

The command does not display on the screen as it is typed.

The **Login** prompt appears. If an error is made when entering the command string, the message `Ill Formed Packet` appears. It appears as a series of numbers followed by some form of the typed command. If this occurs, repeat Step 3 and Step 4.

5 Enter the default logon name and the default password:**admin**
admin

admin
admin

The logon name and password are case-sensitive.

The **NetLink OAI System** screen appears. This screen, the main menu screen of the Administration Console, displays the factory-default name of the WLAN Application Gateway 2246 to which the serial port is connected

--End--

Next, configure the WLAN Application Gateway (including IP address) by following the steps in the “Task summary list” (page 202).

Configuration

The NetLink OAI System screen is the main menu of the Administration Console. Use this screen to configure the WLAN Application Gateway 2246.

Administration console navigation

Use the keys described in Table 46 "Administration console navigation" (page 202) to move around the Administration console screens.

Copyright © 2003-2010 Nortel Networks. All Rights Reserved.

Table 46
Administration console navigation

To perform this function	Press
Select function from menu	Arrow keys to highlight the selection. Press **Enter**.
Display menu associated with highlighted field	**Enter**. The Enter key displays the options associated with an item or allows an entry to be typed into the field.
Exit screen	**Esc**. Press the Esc key to return to the previous screen.
Move one line up	Corresponding arrow key.
Move one line down	
Move one field to the left	
Move one field to the right	
Scroll	If a screen has more lines of information than can be displayed at once, the text is wrapped. The scroll feature uses the arrow keys. Press the down arrow key at the last line to move the cursor to the top line. Press the up arrow key at the top line to move the cursor to the last line.

The top line of each screen of the Administration Console displays the hostname and IP address of the WLAN Application Gateway 2246.

Task summary list

Complete the following tasks to configure the WLAN Application Gateway 2246:

Step	Action
1	Select the **OAI Box Configuration** option to configure the system type. See “Configuring the OAI Box” (page 203).
2	Select the **Network Configuration** option to configure the Network settings. See “Configuring network parameters” (page 203).
3	Select the **Telephone Line Configuration** option to configure the handsets . See “Configuring the Telephone Line” (page 208).
4	Select the **Feature Programming** option to configure the function sequence that activates the application. See “Feature programming” (page 211).

--End--

Copyright © 2003-2010 Nortel Networks. All Rights Reserved.

Configuring the OAI Box

Follow the steps in Procedure 15 “Configure the system type from the OAI Box Configuration option” (page 203) to configure the system type.

Procedure 15
Configure the system type from the OAI Box Configuration option

Step	Action
1	From the **NetLink OAI System** screen, select **OAI Box Configuration**. This option does not appear unless Use NetLink GW with mogX00 is configured to Yes, which is the default.
2	Enter the configuration information for the WLAN Application Gateway 2246 (provided by the network administrator). • **Use NetLink GW with mogX00**—change this option to **No**. • **TFTP Download Master**—enter the IP address of the TFTP Server. • **Maintenance Lock**—the system sets this option to **Yes** after maintenance activities are performed that require a reset. This option cannot be changed. It is automatically set. Reset the system at exit to clear Maintenance Lock. Maintenance Lock prevents any new calls from starting. • **Reset System**—if this option is set to **Yes**, the WLAN Application Gateway 2246 is reset after pressing **ENTER**. • **Reset All Systems**—not applicable.
3	Press **Esc** on the keyboard to return to the **NetLink OAI System** screen.

--End--

Configuring network parameters

Follow the steps in Procedure 16 “Configuring the network” (page 203) to configure network parameters, including IP address.

Procedure 16
Configuring the network

Step	Action
1	From the **NetLink OAI System** screen, select **Network Configuration**.
2	Enter the configuration information for the WLAN Application Gateway 2246, as provided by the network administrator.

Copyright © 2003-2010 Nortel Networks. All Rights Reserved.

- **Ethernet Address**—this is the MAC address of the WLAN Application Gateway 2246. This address is set at the factory.
- **IP Address**—enter the complete IP address for the WLAN Application Gateway 2246, including digits and periods. Do not use DHCP. The IP address can be changed after initial configuration.
- **Hostname**—the default host name can be changed. This is the name of the WLAN Application Gateway 2246 to which connection is made. This name is for identification purposes only. Spaces cannot be entered in this field.
- **Subnet Mask**—Enter the subnet mask defined by the network administrator.
- **Default Router**—DHCP or static IP address.
- **Allow Telnet Connections**—Enter **Y** (Yes) to allow connection to the WLAN Application Gateway 2246 through Telnet. Enter **N** (No) if no Telnet connection is allowed.
- **Allow FTP Connections**—Yes or No (NTTQ65xx models only).
- **DNS server and DNS domain**—these settings are used to configure Domain Name Services (DNS). (These settings can also be configured as DHCP. This causes the DHCP client in the WLAN Application Gateway 2246 to attempt to automatically obtain the correct configuration from the DHCP server. The DHCP setting is only valid when the IP address is also acquired using DHCP).
- **WINS servers**—these settings are used for Windows Internet Name Services (WINS). (These settings can also be configured as DHCP. This causes the DHCP client in the WLAN Application Gateway 2246 to attempt to automatically obtain the correct setting from the DHCP server. The DHCP setting is only valid when the IP address is also acquired using DHCP.) When WINS is configured properly, the WLAN Application Gateway 2246 can translate hostnames to IP addresses. When using Telnet, it is also possible to access the WLAN Application Gateway 2246 using its hostname instead of the IP address.
- **Logging**—can be configured to **Syslog** or **NONE**.
- **Log server**—enter the IP address or hostname of the Syslog Server on the network if Syslog is configured. The WLAN Application Gateway 2246 writes Syslog format diagnostic messages to the Syslog Server.
- **SNTP server**—can be configured as a hostname, IP address, or NONE. The SNTP server is a Simple Network Time server. The WLAN Application Gateway 2246 obtains the

Copyright © 2003-2010 Nortel Networks. All Rights Reserved.

current date and time from the SNTP server and tags syslog messages with the date.

- **IGMP Enabled**—configure as **Yes** or **No**. IGMP is Internet Group Routing Protocol. **IGMP Enabled** allows the WLAN Application Gateway 2246 to join multicast groups. Enable this option if the network switch connected to the WLAN Application Gateway 2246 requires IGMP for multicast traffic to be forwarded.
- **Maintenance Lock**—the system sets this option to **Yes** after maintenance activities are performed that require a reset. This option cannot be changed. It is automatically set. Reset the system at exit to clear Maintenance Lock. Maintenance Lock prevents any new calls from starting.
- Press **ESC** to return to the **NetLink OAI System** screen.
- Reset the WLAN Application Gateway 2246.

--End--

Connecting to the LAN

Follow the steps in Procedure 17 “Connecting the WLAN Application Gateway 2246 to the LAN” (page 205) to connect the WLAN Application Gateway 2246 to the LAN.

Procedure 17
Connecting the WLAN Application Gateway 2246 to the LAN

Step	Action
1	Using an RJ-45 cable, connect the NETWORK port of the WLAN Application Gateway 2246 to the connecting port on the Ethernet switch.
2	Power up the entire system.

--End--

All components cycle through their usual diagnostic routine.

Connecting to the Application Server

Some applications can require a LAN connection between the Application Server and the WLAN Application Gateway 2246. If the applications do not require a LAN connection, use the RS-232 port connection. In some situations, a modem is connected to be used for remote administration of the WLAN Application Gateway 2246.

Copyright © 2003-2010 Nortel Networks. All Rights Reserved.

Connect to the Application Server through an RS-232 port

Some applications or systems can require an RS-232 connection between the Application Server and the WLAN Application Gateway 2246. If the applications have the ability to communicate messages over TCP/IP, and do not require a serial connection, the RS-232 cabling is not required. In that case, the LAN connection (port 5456) through the Ethernet switch can be used for the applications.

Connect the Application Server to the WLAN Application Gateway 2246 serial port by using a cable that conforms to RS-232 standards for DTE-to-DTE connections (null modem cable).

Figure 28
RS-232 cable connection

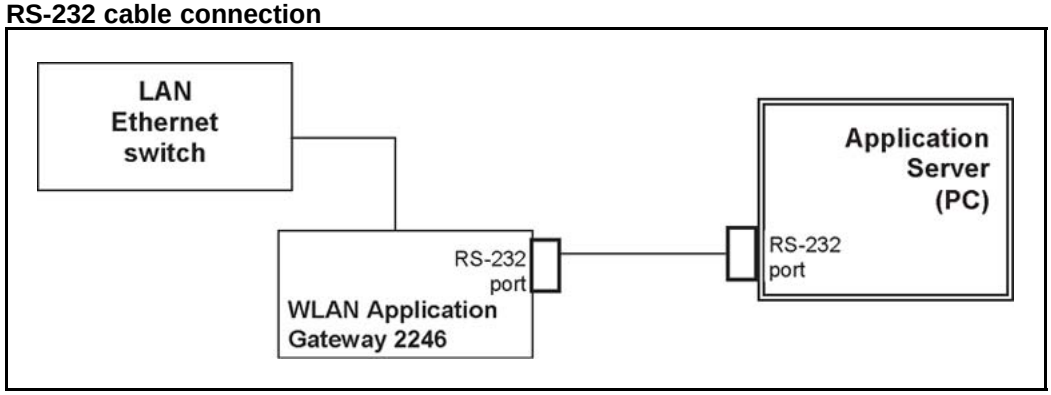

The WLAN Application Gateway 2246 uses the following pins on the connector.

Table 47
Pins on the connector

Pin	Function
1	Carrier Detect
2	Data OAI Receives
3	Data OAI Transmits
5	Ground
7	Ready to Send
8	Clear to Send

Connect to the Application Server through the LAN

The IP address must be configured for the WLAN Application Gateway 2246 to function on the LAN. Follow the application instructions to identify the WLAN Application Gateway 2246 to the application.

Copyright © 2003-2010 Nortel Networks. All Rights Reserved.

Figure 29
WLAN Application Gateway 2246 connection to Application Server through the LAN

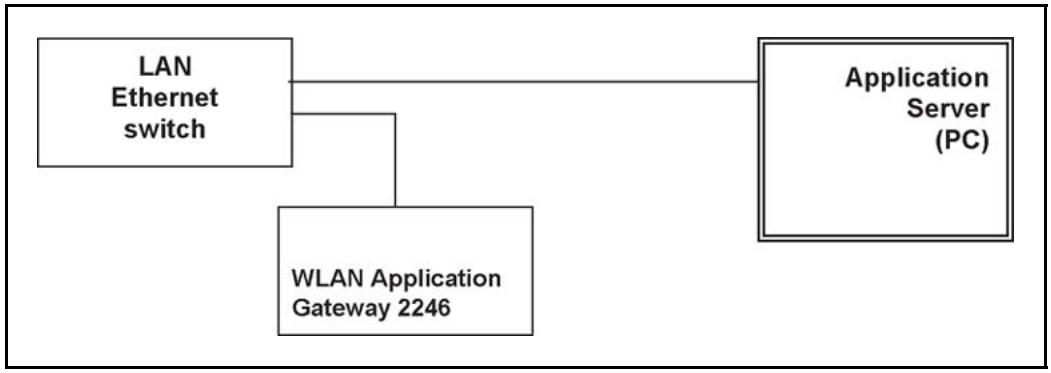

Connect to Application Server through a modem

Connect the modem to the Gateway serial port using a cable that conforms to RS-232 standards for DTE-to-DCE connections. See Figure 30 "WLAN Application Gateway 2246 connection to Application Server through a modem" (page 207).

Figure 30
WLAN Application Gateway 2246 connection to Application Server through a modem

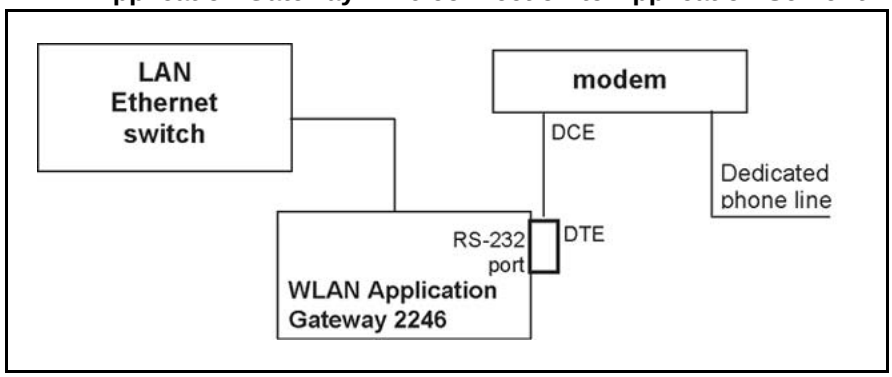

Continuing configuration through Telnet

After the IP address for the WLAN Application Gateway 2246 is configured, the WLAN Application Gateway 2246 reset and connected to the LAN and the Application Server, Telnet can be used to continue the WLAN Application Gateway 2246 configuration.

Connecting through Telnet

Connection to the WLAN Application Gateway 2246 can be done through the network using Telnet. Telnet can only be used after the WLAN Application Gateway 2246 IP address is configured.

Copyright © 2003-2010 Nortel Networks. All Rights Reserved.

The Telnet method of connection is used for routine maintenance of the system for both local and remote administration, depending on the network.

Follow the steps in Procedure 18 “Connecting to a WLAN Application Gateway 2246 through Telnet” (page 208) to connect to a WLAN Application Gateway 2246 through Telnet.

Procedure 18
Connecting to a WLAN Application Gateway 2246 through Telnet

Step	Action
1	Run a Telnet session to the IP address of the WLAN Application Gateway 2246.
2	Log in to the WLAN Application Gateway 2246. The **NetLink OAI System** screen appears. Because the WLAN Application Gateway 2246 is initially configured, the **NetLink OAI System** screen now has some different options displayed.

--End--

When the configuration procedure is complete, the NetLink OAI System screen adds a Feature Programming option. Also, the OAI Line Configuration option is replaced by a Telephone Line Configuration option.

Configuring the Telephone Line

Each handset that uses the application features must be configured with its line number and MAC address. The name and extension number of the handset user can be entered. Obtain this information from the handset Planning Worksheet. See “Planning Worksheet for Handsets” (page 218).

The handsets require special configuration. This can include configuring options on the DHCP server or on the handset to allow it to communicate with the WLAN Application Gateway 2246. Be sure these setting are correct. For more information, see *WLAN Handsets Fundamentals (NN43001-505)*.

The system does not allow the same handset to register to two different lines. Press **Esc** to cancel any unwanted transaction.

Follow the steps in Procedure 19 “Configuring a telephone line” (page 209) to configure the telephone lines for the application.

Copyright © 2003-2010 Nortel Networks. All Rights Reserved.

Procedure 19
Configuring a telephone line

Step	Action
1	From the **NetLink OAI System** screen, select **Telephone Line Configuration** and press **Enter**.
2	At the Telephone Line Configuration screen, use the arrow keys to navigate to the **Name** and **Extension** fields.
3	Enter the associated data for the wireless handsets. • **MAC Address**—the MAC address is printed on the sticker underneath the battery on the handset. It can also be displayed on the handset by turning off the wireless handset, and then pressing and holding the Power On/Start Call button. The MAC address appears on the first line of the wireless handset display (12 characters). The MAC address must be manually entered by typing the entire address, including digits and colons. • **Name**—enter the user name assigned to the wireless handset. This is for record keeping only; it does not communicate the name to the Call Server or the handset. • **Extension**—enter the extension number assigned to the handset. This is for record keeping only; it does not communicate the extension number to the Call Server or the handset.
4	Write the MAC address on the Wireless Handset Planning Worksheet. See "Planning Worksheet for Handsets" (page 218).
5	Repeat step 4, step 5, and step 6 for each wireless handset to be added or changed.
6	Press **Esc** to return to the **NetLink OAI System** screen.

--End--

Deleting a handset

Follow the steps in Procedure 20 "Deleting a handset" (page 209) to delete a WLAN IP Telephony Manager.

Procedure 20
Deleting a handset

Step	Action
1	From the **NetLink OAI System** screen, select **Telephone Line Configuration** and press **Enter**.

Copyright © 2003-2010 Nortel Networks. All Rights Reserved.

The **Telephone Line Configuration** screen displays.

2 Use the arrow keys to highlight the line to be deleted.

3 Press **D** to delete the handset information.

4 Press **Y** to accept changes.

5 Press **Esc** to return to the **NetLink OAI System** screen.

--End--

Searching for a handset

While in the Telephone Line Configuration or the Telephone Line Status screens, a search hot key is available.

Follow the steps in Procedure 21 “Searching for a handset” (page 210) to search for a handset.

Procedure 21
Searching for a handset

Step	Action
1	From the **NetLink OAI System** screen, select **Telephone Line Configuration** and press **Enter**.
2	At the **Telephone Line Configuration** screen, select the field to use as the search key (**MAC Address**, **Name**, or **Extension**),
3	Press **S** to display a search screen dialog box.
4	Type an appropriate search string.
5	Press **Enter**. The success or failure of the search appears at the bottom of the screen.
6	Continue to change the search string for different search criteria or exit by pressing the **Esc** key.

--End--

The first line of the Telephone Line Configuration or Telephone Line Status screen displays the line in which the search match is found.

Successful searches always have the first found match at the top of the list.

Partial strings match the beginning of strings. For example, a search for extension 10 matches extensions 10, 100, 1000, and so on, but does not match 010.

Copyright © 2003-2010 Nortel Networks. All Rights Reserved.

Feature programming

The application function is accessed in the handset by pressing the FCN button plus a second button. The button used to access the application feature from the wireless handset is configured through the Feature Programming option.

FCN 1-6 are hard-coded. If the application function is programmed to use FCN 1-6, the hard-coded function is overridden. Nortel recommends using 7, 8, or 9 for the application function.

Follow the steps in Procedure 22 “Programming a feature” (page 211) to program an application feature for the wireless handsets.

Procedure 22
Programming a feature

Step	Action
1	From the **NetLink OAI System** screen, select **Feature Programming** and press **Enter**.
2	At the Feature Programming screen , use the arrow keys to select the function number 7, 8, or 9 to associate with the application.
3	Type any label up to six characters. The label you type here appears on the handset telephone display screen next to the assigned number on the FCN menu.

--End--

Setting or changing a password

You can configure a unique password for the WLAN Application Gateway 2246. The password restricts access to administrative functions of the device.



WARNING
Record the password and store it in a safe place. If the password is lost or forgotten, contact Nortel Technical Support.

Follow the steps in Procedure 23 “Setting or changing a password” (page 212) to configure or change a password on the WLAN Application Gateway 2246.

Copyright © 2003-2010 Nortel Networks. All Rights Reserved.

Procedure 23
Setting or changing a password

Step	Action
1	From the **NetLink OAI System** screen, select **Change Password** and press **Enter**. The Change Password screen displays. An asterisk (*) indicates an item that is not applicable.
2	Enter the default password: `admin`
3	Follow the prompts to configure a new password.

--End--

System status

Use the steps in Procedure 24 “Viewing system status” (page 212) to view the status of the system.

Procedure 24
Viewing system status

Step	Action
1	From the **NetLink OAI System** screen, select the **System Status Menu** option.
2	At the **Systems Status Menu** screen, select from the following options: • **Application Active**—*Yes* appears if the application is communicating correctly with the WLAN Application Gateway 2246. *No* appears if the application is not connected. This field is read-only and changes dynamically. • **Error Status**—The only application-specific error is **No ECP heartbeat**, which means the application failed to send a heartbeat to the WLAN Application Gateway 2246. • **Network Status**—information about the connection to the LAN. See “Network status” (page 213). • **Software Versions**—lists the software versions currently running on the WLAN Application Gateway 2246. See “Software versions” (page 214). • *** Telephone Line Status**—provides information about the functioning of each wireless handset registered to the WLAN

Copyright © 2003-2010 Nortel Networks. All Rights Reserved.

Application Gateway 2246. See “Telephone line status” (page 214).

--End--

Network status

The WLAN Application Gateway 2246 is connected to the Ethernet network, referred to as the LAN. The information about this connection displayed on the Network Status screen.

The following information appears at the top of the screen:

- **Ethernet Address**—MAC address of the WLAN Application Gateway 2246 (hexadecimal).
- **Stats Time Period**—the length of time the statistics are accumulating in the **Pkts** and **Bytes** columns. This is either the system uptime, or the time that has elapsed since a user pressed **C=Clear** while viewing this display.
- **User Time Period**—the length of time (in seconds) that statistics accumulate in the **Userpkts** column before resetting to zero. When troubleshooting a problem, use this setting to isolate statistics for a given time period (for example, one hour). This is the only field in this screen that can be changed by the user.

The rest of the display is a table of Ethernet statistics. The Pkts and User Pkts columns list the count of Ethernet packets received or transmitted. The Bytes column is the count of bytes received or transmitted during the amount of time indicated by the Stats Time Period.

- **RX**—number of packets and bytes received addressed to the WLAN Application Gateway 2246.
- **RX Broadcast**—the number of broadcast packets and bytes received.
- **RX Multicast**—the number of packets and bytes received with the multicast address. (A multicast message is sent to more than one destination on the network.)
- **RX Not For Us**—the number of multicast packets and bytes received that were not for the WLAN Application Gateway 2246.
- **TX**—the total number of packets and bytes transmitted.
- **Interrupts**—the number of times the Ethernet controller signals the microprocessor that it has received or sent a packet.

Copyright © 2003-2010 Nortel Networks. All Rights Reserved.

- **Collisions**—the number of times the Ethernet controller attempts to send a packet, but another device on the network transmitted at the same time, corrupting the transmission.
- **Collision Drops**—the number of packets the Ethernet controller discards, because there were over sixteen collisions. After sixteen collisions, the Ethernet controller hardware discards the current packet and attempts to send the next packet in its buffer.
- **CRC Errors**—the number of packets discarded by the Ethernet controller, because of a Cyclic Redundancy Check (CRC) error.

Viewing the network status

From the **System Status Menu** screen, select **Network Status**.

The Network Status screen displays information about the Ethernet network. This information can help troubleshoot network problems.

Software versions

Each WLAN Application Gateway 2246 and handset runs software that is controlled and maintained through versioning. The Software Versions screen provides information about the version currently running on the components. This information helps determine if the most recent version of software is running, and assists Nortel Technical Support in troubleshooting software problems.

Viewing software versions

From the **System Status Menu** screen, select **Software Versions**.

Telephone line status

The Telephone Line Status screen displays which wireless handsets are communicating with the WLAN Application Gateway 2246.

The following information appears on the **Telephone Line Status** screen:

- **WT MAC**—the MAC address of the handset that is entered when the wireless handset is configured.
- **NameExtension**—these fields contain the data entered at configuration.
- **Phone**—**No ChkIn** indicates the handset is not using the application function. **ChkIn** indicates the handset is communicating with the WLAN Application Gateway 2246.

Viewing telephone line status

From the System Status Menu screen, select **Telephone Line Status**.

Copyright © 2003-2010 Nortel Networks. All Rights Reserved.

The WLAN Application Gateway 2246 displays up to 16 telephone lines at one time. Move to the next group of 16 lines by using the arrow keys.

Certification testing

The following sections provide information about certification testing.

WLAN Application Gateway 2246 certification

After the WLAN Application Gateway 2246 is properly connected to the Application Server, LED 1 blinks.

Wireless handset certification

The procedure for certification of wireless handsets is different depending on whether you are installing the WLAN Application Gateway 2246 on a new system or an existing system.

WLAN Application Gateway 2246 installation on new system

If this is a new system installation, continue with handset registration and Call Server programming. When the wireless handset installation is complete, perform the usual voice and coverage tests.

WLAN Application Gateway 2246 installation on existing system

Follow the steps in Procedure 25 “Certifying wireless handsets on an existing system” (page 215) to certify the wireless handsets on an existing system.

Procedure 25
Certifying wireless handsets on an existing system

Step	Action
1	Place a test call.
2	Test the features on each handset to ensure the system is working properly.
3	Test the application on each handset.
4	Consult the application provider for specific test procedures.

--End--

Software

The WLAN Application Gateway 2246 and the handset use proprietary software programs. The software versions that are running on the system components can be displayed through the **System Status** screen.

Nortel provides information about software updates, and how to obtain the software (for example, downloading from the Nortel Web site).

Copyright © 2003-2010 Nortel Networks. All Rights Reserved.

Software updates

After obtaining the software updates from Nortel, they must be transferred to the appropriate location in the LAN. This enables the corresponding system components to access and update their software. The FTP (File Transfer Protocol) method of transfer is used.

In the WLAN Application Gateway 2246, the flash file system has the following files:

Table 48
Software files

File name	Description
config.bin	OAI box configuration
fnctla.bin	functional code
oaiptlst.bin	phone list configuration
oaipttlsb.bin	redundant phone list configuration

Nortel periodically upgrades the fnctla.bin file, which is the only file downloaded. The other files are configuration files and their names are provided for information and backup purposes.

Obtain software using FTP

When using FTP, a host system is used to connect to a remote system. In this example, the host is the client and the server is the WLAN Application Gateway 2246. The put command means to copy the files from the host to the remote system.

ATTENTION
FTP commands vary with the particular FTP program used. Use the following steps as a general guide but be aware that an FTP program can use different terms to describe the procedure.

Follow the steps in Procedure 26 “Transferring the software using FTP” (page 216) to transfer the software using FTP.

Procedure 26
Transferring the software using FTP

Step	Action
1	Navigate to the **OAI Box Configuration** screen and place the system in Maintenance Lock before proceeding with the FTP procedure. This prevents new calls from starting. No calls can be in progress during the FTP procedure.
2	Connect to the WLAN Application Gateway 2246 using the command:

Copyright © 2003-2010 Nortel Networks. All Rights Reserved.

FTP <hostname>
OR
FTP <IP address>.

3 Log on using the default administrator logon and password:
admin
admin

4 At the FTP prompt, type **binary**.

5 At the FTP prompt, rename and transfer the functional code file to the client server or WLAN Application Gateway 2246.

put **mog700.bin fnctla.bin**

where

MOG700.bin is the downloaded file.
fnctla.bin is the new name of the file.

6 After the file transfer is complete, use the **Quit** command to quit FTP.

7 Navigate to the **NetLink OAI System** screen for the WLAN Application Gateway 2246

8 Select **System Status**.

9 Select **Software Versions** to verify that software versions for the WLAN Application Gateway 2246 are correct.

10 Reset the system through the **OAI Box Configuration** screen in order to restore Maintenance Lock to N.

--End--

ATTENTION
You can use a GUI FTP client instead of the described command line FTP procedure.

TFTP software updates Systems

The WLAN Application Gateway 2246 uses proprietary software programs. You can display the software versions running on the system components through the WLAN Application Gateway 2246 System Status screen.

Nortel provides information about software updates and how to obtain the software (for example, downloading from the Nortel Web site).

Follow the steps in Procedure 27 “Loading software updates” (page 218) to load software updates.

Copyright © 2003-2010 Nortel Networks. All Rights Reserved.

Procedure 27
Loading software updates

Step	Action
1	Install a TFTP Server on a LAN-connected system.
2	Consult the server vendor's documentation for information about TFTP.
3	After obtaining the software update from Nortel, load the software in a location that is accessible by the TFTP program.
4	To configure the host and start the download, from the **NetLink OAI System** screen, select the **TFTP Server Download Configuration** option.
5	Enter the TFTP Server hostname.
6	Use the arrow keys to move the cursor to the **Begin TFTP Download** option.
7	Press **Enter** to begin the download. The code downloads into the WLAN Application Gateway 2246.

--End--

Planning Worksheet for Handsets

Copy and complete the worksheet in Table 49 "Handset Planning Worksheet" (page 218) to track parameters for each handset.

Table 49
Handset Planning Worksheet

OAI Port	MAC Address	User Name	Dialing Ext.	IP Address (if static)
1				
2				
3				
4				
5				
6				
7				
8				
9				
10				
11				

Copyright © 2003-2010 Nortel Networks. All Rights Reserved.

Table 49
Handset Planning Worksheet (cont'd.)

OAI Port	MAC Address	User Name	Dialing Ext.	IP Address (if static)
12				
13				
14				
15				
16				
17				
18				
19				
20				
21				
22				
23				
24				
25				
26				
27				
28				
29				
30				

Free the serial port for administrative purposes

If the serial port is being used as the primary communication link with the Application Server, you must enter the OAI command to free the serial port to allow it to be used for administrative purposes, such as changing the IP address of the WLAN Application Gateway 2246.

To free the serial port to allow it to be used for administrative purposes, follow the steps in Procedure 14 "Connecting to the WLAN Application Gateway 2246 through a serial port" (page 200).

After configuring the WLAN Application Gateway 2246, perform the following steps to again use the serial port as the communication link with the Application Server.

Procedure 28
Using the serial port as the Application Server communication link

Copyright © 2003-2010 Nortel Networks. All Rights Reserved.

Step	Action
1	Disconnect the terminal or PC from the serial port on the WLAN Application Gateway 2246.
2	Reconnect the communication cable between the WLAN Application Gateway 2246 and the Application Server.
3	Reset the system.

--End--

Normal communication between the Application Server and WLAN Application Gateway 2246 commences.

Copyright © 2003-2010 Nortel Networks. All Rights Reserved.

Appendix Troubleshooting WLAN IP Telephony installations

This appendix contains information required for troubleshooting and diagnosing of a WLAN IP Telephony installation, including the following topics:

- "Site data-gathering tables" (page 221)
- "Product-specific configuration" (page 223)
- "WLAN specific configuration" (page 225)
- "General WLAN configuration" (page 230)
- "DHCP server options" (page 231)
- "DHCP options" (page 232)
- "Quality of Service checklist for voice over WLAN applications" (page 238)
- "Troubleshooting" (page 243)
- "Handset error messages" (page 245)
- "Timing information" (page 246)
- "Diagnostic Tools" (page 247)
- "Data capture" (page 260)
- "Capture assert error messages with the Configuration Cradle" (page 265)
- "Network speech levels" (page 266)
- "Reference documents" (page 266)

Site data-gathering tables

The following are examples of site data-gathering tables.

Copyright © 2003-2010 Nortel Networks. All Rights Reserved.

Figure 31
System Information table

System Information						
Customer Network (hardware and software)						
Device	Hardware	Software	Device	Qty	Hardware	Software/Firmware
TPS (SS/BCM/IPL)			Wireless Telephone Sets (WTS)			
VGMC (ITG/IPL/SMC)			2245			
AP			2246			
AP Antenna Int/Ext		NA	Wired IP phones			
AP Antenna Pattern		NA				
LAN/Data Switch			TDM phones			
DHCP Server						
TFTP Server						

Figure 32
System History table

System History	
Date of Install:	
Description of recent upgrades or system changes:	
Suspected Trigger event:	
Problem Theories:	
Tests Performed and Conclusions reached:	
Any other Value-Added information:	

Figure 33
Customer Environment table

Customer Environment	
Type of facility (Office, Manufacturing, Retail, Hospital, etc.)	
Name/Description of other wireless products in use at site.	
Was site survey or analysis performed? If so, by whom and when?	
Was WLAN deployment designed for VoIP?	
Other environmental variables?	

Copyright © 2003-2010 Nortel Networks. All Rights Reserved.

Figure 34
Attachments: IP Sniffer Trace Captures table

Attachments: IP Sniffer Trace Captures — Wired and Wireless			
File Name	MAC of Phones	How Was Trace Captured?	Trace WEP Key

ATTENTION
Take the wired traces at the mirrored port, to which the 2245 connects, on the Data Switch.

Take the Wireless traces at the Access Points (AP), which are associated with the Wireless Telephony Sets (WTS), on the channels that are used.

Figure 35
Attachments: Other Required table

Attachments: Other Required		
	File Name(s)	Remarks
Network Topology Drawings		
Access Point Configurations		
Data Switch QoS Configurations		
LD 22 ISSP from CS1000 CS		
pdt ISSP from CS1000 SS		
plist from each VGMC		

Product-specific configuration

The following sections provide product-specific configuration information.

Terminal proxy server

Ensure that the system meets the following requirements:

- Communication Server 1000 Release 3.0: include the patches identified in the current product bulletin

Copyright © 2003-2010 Nortel Networks. All Rights Reserved.

2210, 2211: hardware version 97.070
2245: load 174.027

- Communication Server1000 Release 4.0: include the patches identified in the current product bulletin
  2210, 2211, 2212: hardware version 97.070
  2245: load 174.027
- Communication Server 1000 Release 4.5: include the patches identified in the current product bulletin
  2210, 2211, 2212: hardware version 97.070
  2245: load 174.027
- BCM 3.6: requires cumulative patch #3
  2210, 2211: hardware version 97.070
- BCM 3.7
  2210, 2211: hardware version 97.070
- BCM 4.0
  2210, 2211, 2212: hardware version 97.070
- Communication Server 2100: requires software version CICMXPM SE09
  Handset hardware version - 97.070

Handsets

For the WLAN Handsets 2210/2211/2212, configure the license code to 010 to download the Nortel UNIStim hardware.

For the WLAN Handsets 6120/6140, configure the Telephony Protocol to 032.

For hardware and documentation, go to www130.nortelnetworks.com.

WLAN IP Telephony Manager 2245

If you have multiple WLAN IP Telephony Manager 2245 units, you must split the alias IP address range to allocate a range to each 2245. Failure to do so causes nonfunctioning handsets because one or more 2245 units cannot allocate alias IP addresses. Without alias IP addresses, the handsets are unable to register with the terminal proxy server (TPS).

Quality of Service

The Differentiated Services Code Point (DSCP) Tag is a Quality of Service (QoS) mechanism for setting relative priorities. Packets are tagged with a DSCP field in the IP header for type of service. Configure the value as a number from 0 to 255; the value can be different for each traffic class listed on the screen. Administrative traffic can have the lowest priority because it does not require voice quality.

Copyright © 2003-2010 Nortel Networks. All Rights Reserved.

DSCP tags determine packet priorities for QoS. Nortel recommends the following settings:

WT (In call)—46 (default 4)
WT (Standby)—40 (default 0)
RTP—46 (default 4)
PBX—40 (default 0)
Inter-SVP2—0 (default)

Other networks may use different settings—adjust as needed to match the network.

ATTENTION
You must configure the command **mls qos trust dscp** on every on every Cisco switch port, on which a 2245 is installed; otherwise, the DSCP tagging configured on the WLAN IP Telephony Manager 2245 is ignored.

WLAN specific configuration

The following sections provide configuration information for various switches. In this document, WLAN Security Switch means Nortel WLAN Security Switch.

Nortel switches

This section contains configuration information for Nortel switches.

Nortel WLAN Security Switch

The 2350, 2360, and 2380 model switches have the following requirements:

- load 4.1.14
- configure radio-profile voice dtim-interval 3
- configure radio-profile voice active-scan disable (prevents the AP from going off-channel to scan)
- radio-profile voice WMM enabled

Cisco access points and switches

This section contains configuration information for selected Cisco access points and switches.

Cisco Aironet 1200 Series

Ensure that the software is 12.3.7(JA3). This requirement is current as of November 2006 and is subject to change.

Copyright © 2003-2010 Nortel Networks. All Rights Reserved.

Configure the following settings:

- dtim-interval 3
- protocol 119 enabled
- less than 10 ms voice latency
- voice WMM enabled

For more information, see the *Cisco Aironet 1200 Series User Guide*.

Nortel WLAN Security Switch 2270 and the Cisco 4400 Series WLAN Controller

Alpha The 2270 and 4400 infrastructure has the following requirements:

- Turn off aggressive load balancing.
- Disable MAC filtering authentication for voice SSID and use only static WEP (40 or 104 bit) encryption.
- Configure 802.11b radio data rates as follows:
  - 1Mb/s—Mandatory
  - 2Mb/s—Mandatory
  - 5.5Mb/s—Supported
  - 11Mb/s—Supported
- Uncheck enable short preamble.
- Enable Multicast Support on the WLAN Security Switch 2270 to enable use of the PTT feature for Nortel Handsets.

  With the following settings, you can use Multicast for some of the regular WLAN IP Telephony Manager 2245 and PBX control traffic:

  Switch > General: Ethernet Multicast Support = Enabled: (2.2)
  Switch > General, Ports: click ports 1 edit on right hand side of the screen and configure Multicast Appliance Mode = Enabled.
- Turn off Rogue AP Detection.
- Turn off AutoRF unless you are running software from Cisco version 4.0.206.0 or later. If you are running version 4.0.206.0 or later, configure the following additional parameters for AutoRF:

Parameter	Setting	Importance
Noise Measurement	3600	Required
Load Measurement	3600	Required
Signal Measurement	3600	Required
Coverage Measurement	3600	Required

- Verify that Idle timer is configured to 300 seconds.

Copyright © 2003-2010 Nortel Networks. All Rights Reserved.

- Verify that the AP session timeout is at least 1800 seconds.

  Nortel recommends that you configure the AP session timeout to 65 534 seconds.

- Verify the following setting:

  2230 AP DTIM = 3

- If there are multiple WLAN Security Switch 2270s installed, which are intended to participate in a single RF mobility group, the following criteria must be met:

  — The RF mobility group name must be same on all 2270s that belong to the RF mobility group.

  The mobility group name is case sensitive.

  — Configure the virtual IP address for virtual interface to a nonroutable address (for example, a fictitious address such as 1.1.1.1). The virtual IP address must be same on all 2270s that belong to the RF mobility group.

  — Manually add each switch to the list of RF mobility group members for each switch.

  This is not a dynamic configuration.

  For example, you have three switches: A, B, and C.
  You must add B and C as members under mobility group configuration for switch A.
  You must add A and C as members under mobility group configuration for switch B.
  You must add A and B as members under mobility group configuration for switch C.
  The above recommendation is true in the case of VoDATA as well.

WLAN Security Switch 2270 notes The following list contains important information about the WLAN Security Switch 2270 and pre-3.2.116.21 code.

- In the 2.0.x code for the WLAN Security Switch 2270, multicast packets are directly handled by the CPU. Nortel Handsets use multicast packets only when the Push-to-talk (PTT) feature is used. Because the CPU handles all multicast packets (control+data) with the 2.0.c code, there can be problems with voice quality for PTT conversations, as well as for regular calls.

  The multicast issues are resolved in the 2.2.x code. With the 2.2.x code, to ease the CPU processing load, multicast packets are off-loaded to another hardware chip within the 2270.

- In the 2.0.x code, if GOLD QoS is enabled for voice SSID, APs can fail to run RRM sampling while packets are processed in the GOLD queue.

Copyright © 2003-2010 Nortel Networks. All Rights Reserved.

Therefore, the AutoRFR calculations on the WLAN Security Switch 2270 are further delayed. You must watch out for AutoRF issues in such scenario. If it is a pure voice implementation, you can assign SILVER QoS to voice SSID. This is only a best-effort recommendation. If the voice traffic drops as a result, move back to GOLD QoS for voice.

- The PTT feature does not work in 2.0 code if the WLAN Security Switch 2270 is configured in L2-LWAPP mode. This issue is resolved in the 2.2.x code.
- There is a client-handoff feature in the advanced options in the command line interface (CLI) for release 3.0.107.0.

  For more information, go to www.cisco.com.

  To configure the client handoff to occur after a selected number of 802.11 data packet excessive retries, use the config advanced client-handoff command:

  config advanced client-handoff <num_of_retries>

  Default: 0 excessive retries (disabled)

  The command to configure the client handoff to 100 excessive retries is:

  config advanced client-handoff 100

ATTENTION
2.x code is not supported. Nortel recommends that sites upgrade to 3.2.116.21 code. Contact Nortel GNTS Technical support to obtain this code—do not download it from the Cisco Web site.

Specific Cisco configuration examples

Table 50 "1230 connected with 2950 and 2245 connected with 2950" (page 228) provides the steps to configure the Cisco Aironet 1230 connected with a Cisco Catalyst 2950, and the WLAN IP Telephony Manager 2245 connected with the Cisco Catalyst 2950.

Table 50
1230 connected with 2950 and 2245 connected with 2950

	AP: 1230	2950 connected the APs	2950 connected to 2245
1	class-map match-all class_SVP_VoIP match ip protocol 119 (protocol 119 marked the value of cos 5)	mls qos map cos-dscp 0 8 16 40 32 46 48 56	mls qos map cos-dscp 0 8 16 40 32 46 48 56

Copyright © 2003-2010 Nortel Networks. All Rights Reserved.

Table 50
1230 connected with 2950 and 2245 connected with 2950 (cont'd.)

	AP: 1230	2950 connected the APs	2950 connected to 2245
2	Policy-map wireles s-SVP-VoIP class class_SVP_VoIP	wrr-queue bandwidth 25 25 50 0 wrr-queue cos-map 1 0 1 2 4 wrr-queue cos-map 3 3 6 7 wrr-queue cos-map 4 5 (dscp 40 and 47 by default are marked as cos 5)	wrr-queue bandwidth 25 25 50 0 wrr-queue cos-map 1 0 1 2 4 wrr-queue cos-map 3 3 6 7 wrr-queue cos-map 4 5 (dscp 40 and 47 by default are marked as cos 5)
3	int fastethernet 0.240 encapsulation dot1Q 240 service-policy input wireless- SVP-VoIP	int fastethernet 026 (the port that is connected with the AP) switchport trunk native vlan 11 switchport trunk allowed vlan 11, 240 switchport mode trunk mls qos trust cos	int fastethernet 03 (the port that connected with 2245) switchport access vlan xx switchport mode access mls qos trust cos mls qos cos 5 service-policy input trust-voice-2 245
4	(for return path) dot11 priority-map avvid		class-map match-all voice-sig match access-group 100
5			access-list 100 permit udp 172.23.0.016 eq 5000 172.23.0.016
6			class-map match-all voice-bearer match access-group 101
7			access-list 101 permit udp 172.23.0.016 eq 5200 172.23.0.016
8			policy-map trust -voice-2245 class voice-sig set ip dscp 40 class voice-bearer set ip dscp 46

Table 51 "1230 connected with 3560 and 2245 connected with 6509" (page 229) provides the steps to configure the Cisco Aironet 1230 connected to the Cisco Catalyst 3560, and the Cisco Catalyst 6509 connected to the WLAN IP Telephony Manager 2245.

Table 51
1230 connected with 3560 and 2245 connected with 6509

	AP:1230	3650 connected to APs	6509 connected to 2245
1	class-map match-all class_SVP_VoIP match ip protocol 119 (protocol 119 marked the value of cos 5)	mls qos	mls qos

Copyright © 2003-2010 Nortel Networks. All Rights Reserved.

	AP:1230	3650 connected to APs	6509 connected to 2245
2	Policy-map wirele ss-SVP-VoIP class class_SVP_VoIP	mls qos map cos-dscp 0 8 16 40 34 46 48 56	mls qos map cos-dscp 0 8 16 40 32 46 48 56
3	int fastethernet 0.240 encapsulation dot1Q 240 service-policy input wireless-SVPVoIP	interface fastethernet 01 priority-queue out mls qos trust cos	class-map match-all voice-sig match access-group 100
4	(for return path) dot11 priority-map avvid		access-list 100 permit udp 172.23.0.016 eq 5000 172.23.0.016
5			class-map match-all voice-bearer match access-group 101
6			access-list 101 permit udp 172.23.0.016 eq 5200 172.23.0.016
7			policy-map trust -voice-2245 class voice-sig set ip dscp 40 class voice-bearer set ip dscp 46
8			int fastethernet 03 (the port that is connected with 2245) switchport access vlan xx switchport mode access mls qos trust cos mls qos cos 5 service-policy input trust-voice-2 245

General WLAN configuration

The following is a list of considerations for general WLAN configuration:

- Multicast must be configured in any WLAN for Push-to-talk (PTT) on the WLAN Handset 2211.
- APs use channels 1, 6, and 11.
- APs require a 15-20dB separation for like channels to avoid cochannel interference.
- A one-way Performance domain is required (handset to call server): Max 100 ms delay, Max 30 ms jitter, and Max 2% packet loss.
- The WLAN IP Telephony Manager 2245 to AP link is (ideally) limited to 100 ms delay, 1 ms jitter and under 2% packet loss.

Copyright © 2003-2010 Nortel Networks. All Rights Reserved.

- The signal Strength must be -70dB or greater to provide sufficient voice quality and proper operation. Note that -60dB or better is required for 11 MB data rate.
- Wireless bridges are not permitted because they contribute to bottleneck delays.
- The transmission power must be the same on all APs and match the power setting on the handsets.
- AP bandwidth usage must be limited to 65 to 80% maximum for handset usage.
- The protocols used are: TCP, UDP, DHCP, DNS, WINS, TFTP, FTP, ARP, ICMP, and Telnet.
- The PTT feature uses the multicast IP address of 224.0.1.116 and is generally isolated to a single subnet.

DHCP server options

The DHCP server options known to work in almost every situation are 3, 7, 42, 66, 128, 151, and 152:

- DHCP Option 3—the Default Gateway
- DHCP Option 7—the Syslog Server
- DHCP Option 42—the Time Server
- DHCP Option 60—the Class Identifier
- DHCP Option 66—the IP address of the TFTP Server
- DHCP Option 151—the IP address of the WLAN IP Telephony Manager 2245
- DHCP Option 152—the IP address for the optional WLAN Application Gateway 2246

DHCP options have the same format as the BOOTP vendor extensions. Options can be fixed length or variable length. All options begin with a tag byte, which uniquely identifies the option. Fixed length options without data consist of only a tag byte. The value of the length byte does not include the tag and length fields.

Options containing NVT ASCII data (ideally) do not include a trailing NULL; however, the receiver of such options must be prepared to delete trailing NULLs if they exist. The receiver must not require that a trailing NULL be included in the data. With some variable-length options, the length field is a constant but it still must be specified.

Copyright © 2003-2010 Nortel Networks. All Rights Reserved.

DHCP options

This section provides the IEEE definitions of the DHCP options. The term SHOULD, as used in this section, is to be interpreted as described in [RFC2119].

DHCP option 1: Subnet Mask. Length: 6 bytes
This option specifies the client's subnet mask. If both the Subnet Mask and the router option are specified in a DHCP reply, this option MUST be first.

00 01 02 03 04 05 06 07 08 09 10 11 12 13 14 15
Code Length

16 17 18 19 20 21 22 23 24 25 26 27 28 29 30 31
Mask

Code. 8 bits. Always set to 1.
Length. 8 bits. Always set to 4.
Mask. 32 bits. Subnet mask of the client.
RFCs: [RFC 2132] DHCP Options.
Updated by: RFC 3942.

DHCP option 3: Length: 6+ bytes This option specifies a list of 32 bit IP addresses for routers on the client's subnet. The routers SHOULD be listed in order of preference.

00 01 02 03 04 05 06 07 08 09 10 11 12 13 14 15
Code Length

16 17 18 19 20 21 22 23 24 25 26 27 28 29 30 31
IP address

Code. 8 bits. Always set to 3.
Length. 8 bits. 4+ in multiples of 4.
IP address. 32 bits. One or more IPv4 addresses.
RFCs: [RFC 2132] DHCP Options.
Updated by: RFC 3942.

DHCP option 6: 6+ bytes This option specifies a list of DNS servers available to the client. The servers SHOULD be listed in order of preference.

00 01 02 03 04 05 06 07 08 09 10 11 12 13 14 15
Code Length

16 17 18 19 20 21 22 23 24 25 26 27 28 29 30 31
IP address

Code. 8 bits. Always set to 6.
Length. 8 bits. 4+ in multiples of 4.
IP address. 32 bits. One or more IPv4 addresses.
RFCs: [RFC 2132] DHCP Options.

DHCP option 7: 6+ bytes This option specifies a list of MIT-LCS UDP servers available to the client. The servers SHOULD be listed in order of preference.

00 01 02 03 04 05 06 07 08 09 10 11 12 13 14 15
Code Length

Copyright © 2003-2010 Nortel Networks. All Rights Reserved.

16 17 18 19 20 21 22 23 24 25 26 27 28 29 30 31
IP address

Code. 8 bits. Always set to 7.
Length. 8 bits. 4+ in multiples of 4.
IP address. 32 bits. One or more IPv4 addresses.
RFCs: [RFC 2132] DHCP Options.
Updated by: RFC 3942.

DHCP option 15: 3+ bytes This option specifies the domain name that client should use when resolving hostnames via DNS.

00 01 02 03 04 05 06 07 08 09 10 11 12 13 14 15
Code Length

16 17 18 19 20 21 22 23 24 25 26 27 28 29 30 31
Domain name

Code. 8 bits. Always set to 15.
Length. 8 bits. 1+.
Domain name. Variable length.
RFCs: [RFC 2132] DHCP Options

DHCP option 42: Length 4+bytes This option specifies a list of IP addresses indicating Network Time Protocol (NTP) servers available to the client. Servers SHOULD be listed in order of preference.

00 01 02 03 04 05 06 07 08 09 10 11 12 13 14 15
Code Length

16 17 18 19 20 21 22 23 24 25 26 27 28 29 30 31
IP address

Code. 8 bits. Always set to 3.
Length. 8 bits. 4+ in multiples of 4.
IP address. 32 bits. One or more IPv4 addresses.
RFCs: [RFC 2132] DHCP Options.
Updated by: RFC 3942.

DHCP option 43 1+ Vendor specific information. RFC 1533, RFC 2132

DHCP option 60 1+ Class-identifier. RFC 1533, RFC 2132 – must be the string value of: Nortel-221x- A or Nortel-61xx-A

DHCP option 66 1+ TFTP server name. RFC 2132

DHCP option 128 TFPT Server IP address.

DHCP option 144 1+ Vendor specific information. RFC 1533, RFC 2132

DHCP option 151 1+ Vendor specific information. RFC 1533, RFC 2132

DHCP option 152 1+ Vendor specific information. RFC 1533, RFC 2132

DHCP option 157 1+ Vendor specific information. RFC 1533, RFC 2132

DHCP option 191 1+ Vendor specific information. RFC 1533, RFC 2132

Copyright © 2003-2010 Nortel Networks. All Rights Reserved.

DHCP support for handsets that emulate the IP Phone 2004

DHCP support in the IP Phone 2004 terminal requires a Class Identifier option with each DHCP Discovery and Request message. Additionally, the IP Phone 2004 checks for either a Vendor Specific option message with a specific, unique to Nortel IP Phone 2004 encapsulated subtype, or a site-specific DHCP option. In either case, a Nortel IP Phone 2004 specific option must be returned by the IP Phone 2004 aware DHCP server in all Offer and Ack messages. The IP Phone 2004 uses the information returned in this option to configure itself for proper operation. This configuration includes binding a new IP address, netmask and gateway (for the local IP stack) as well as configuring Server 1 (minimum) and, optionally Server 2. By default, Server 1 is always assumed to be the primary server after a DHCP session.

The IP Phone 2004 does not accept any Offers or Acks that do not contain all of the following options:

- a Router option

  The IP Phone 2004 requires a default router to function.

- a Subnet Mask option
- a Vendor Specific option

  OR

  a Site Specific option

  The initial DHCP implementation required only the Vendor Specific encapsulated suboption. In interop testing with WinNT (up to SR4), it was discovered that WinNT does not properly adhere to RFC 1541. As a result, it is not possible to use this option. The implementation was changed to add support for either Vendor Specific subops or Site Specific options. This new extension is tested and verified to work with WinNT.

  The site-specific options are all DHCP options between 128 (0x80) and 254 (0xFE). These options are reserved for site specific use by the DHCP RFCs.

Format of the IP Phone 2004 Terminal DHCP Class Identifier field

All IP Phone 2004 terminals fill in the Class ID field of the DHCP Discovery and Request messages with Nortel-i2004-A:

- ASCII-encoded, NULL (0x00) terminated
- unique to Nortel IP Phone 2004
- –A uniquely identifies this version

Copyright © 2003-2010 Nortel Networks. All Rights Reserved.

Format of the IP Phone 2004 Terminal DHCP Encapsulated Vendor Specific option

The following definition describes the Nortel IP Phone 2004 specific, Encapsulated Vendor Specific option. This option must be encapsulated in a DHCP Vendor Specific option (Refer to RFC 1541 and RFC 1533) and returned by the DHCP server as part of each DHCP OFFER and ACK message for the IP Phone 2004 to accept these messages as valid. The IP Phone 2004 pulls the relevant information out of this option and uses it to configure the primary and (optionally) secondary TPSs. Either this encapsulated option or a similarly encoded site-specific option must be present. Configure the DHCP server to send one or the other—but not both. WinNT implementations must use the Site Specific option. For more information, see "DHCP support for handsets that emulate the IP Phone 2004" (page 234).

The format of the Encapsulated Vendor Specific option field is: Type, Length, Data.

- Type (1 octet): 5 choices: 0x80, 0x90, 0x9d, 0xbf, 0xfb (128, 144, 157, 191, 251)

  With the choice of five types, the IP Phone 2004 can operate in environments where the initial choice is already in use by a different vendor. Select only one Type byte.

- Length (1 octet): variable—depends on message content

- Data (Length octets): ASCII-based—format Nortel-i2004-A,iii.jjj.kkk.lll:ppppp,aaa,rrr;iii.jjj.kkk.lll:pppp,aaa,rrr

  — Nortel-i2004-A uniquely identifies this as the Nortel option. Additionally, the -A signifies this version of this specification. For example, future enhancements could use -B.

  — ASCII (,)—separates the fields

  — ASCII (;)—separates the primary from secondary server info

  — ASCII (.)—signals the end of the structure

  — iii.jjj.kkk.lll:ppppp—identifies the IP:port for the server (ASCII-encoded decimal)

  — aaa—identifies the action for the server (ASCII-encoded decimal, range 0 to 255)

  — rrr—identifies the retry count for the server (ASCII-encoded decimal, range 0 to 255)

  This string can be NULL terminated although the NULL is not required for parsing.

Copyright © 2003-2010 Nortel Networks. All Rights Reserved.

Notes:

1. aaa and rrr are ASCII-encoded decimal numbers with a range of 0 to 255. They identify the Action Code and Retry Count, respectively, for the associated TPS server. Internally, to the IP Phone 2004, they are stored as one octet (0x00..0xFF). These fields must be no longer than three digits.
2. The first server is always considered the primary, and the second server always considered secondary.
3. If only one server is required, terminate the primary TPS sequence immediately with (.) instead of (;).
   Example: Norteli2004- A,iii.jjj.kkk.lll:ppppp,aaa,rrr
4. The valid options are one server or two servers (0, 3, or other numbers are not allowed).
5. The Action code values are:
   - 0 - reserved
   - 1 - UNIStim Hello (currently only this value is a valid choice)
   - 2 to 254 - reserved
   - 255 - reserved
6. iii,jjj,kkk,lll are ASCII-encoded, decimal numbers representing the IP address of the server. They need not be three digits long because the (.) and (:) delimiters guarantee parsing. For example, '001', '01', and '1' are all parsed correctly and interpreted as value 0x01 internal to the IP Phone 2004. These fields must be no longer than three digits each.
7. ppppp is the port number in ASCII-encoded decimal. It need not be five digits long because the (:) and (,) delimiters guarantee parsing. For example, '05001', '5001', '1', and '00001' are all parsed correctly and accepted as correct. The valid range is 0 to 65 535 (stored internally in the IP Phone 2004 as hexadecimal in the range 0 to 0xFFFF). This field must be no longer than five digits.
8. In all cases, the IP Phone 2004 treats the ASCII-encoded numbers as decimal values and ignores all leading zeros. More specifically, a leading zero does not change the interpretation of the value to be OCTAL encoded. For example, 0021, 021, and 21 are all parsed and interpreted as decimal 21.

Format of the IP Phone 2004 Terminal DHCP Site Specific option

The following definition describes the Nortel IP Phone specific, Site Specific option. This option uses the DHCP options 128 to 254 (reserved for site-specific use, see RFC 1541 and RFC 1533) and must be returned by the DHCP server as part of each DHCP OFFER and ACK message for the IP Phone 2004 to accept these messages as valid. The IP Phone 2004 pulls the relevant information out of this option and uses it to configure the primary and (optionally) secondary TPSs. Either this encapsulated

Copyright © 2003-2010 Nortel Networks. All Rights Reserved.

option or a similarly encoded site-specific option must be present. Configure the DHCP server to send one or the other—but not both. WinNT implementations must use the Site Specific option. For more information, see "DHCP support for handsets that emulate the IP Phone 2004" (page 234).

The format of the Terminal DHCP Site Specific option field is: Type, Length, Data.

- Type (1 octet): 5 choices: 0x80, 0x90, 0x9d, 0xbf, 0xfb (128, 144, 157, 191, 251)

  With the choice of five types, the IP Phone 2004 can operate in environments where the initial choice is already in use by a different vendor. Select only one Type byte.

- Length (1 octet): variable—depends on message content

- Data (Length octets): ASCII-based—format Nortel-i2004-A,iii.jjj.kkk.lll:ppppp,aaa,rrr;iii.jjj.kkk.lll:pppp,aaa,rrr

  — Nortel-i2004-A uniquely identifies this as the Nortel option. Additionally, the -A signifies this version of this specification. For example, future enhancements could use -B.

  — ASCII (,)—separates the fields

  — ASCII (;)—separates the primary from secondary server information

  — ASCII (.)—signals the end of the structure

  — iii.jjj.kkk.lll:ppppp—identifies the IP:port for the server (ASCII-encoded decimal)

  — aaa—identifies the action for server (ASCII-encoded decimal, range 0 to 255)

  — rrr—identifies the retry count for the server (ASCII-encoded decimal, range 0 to 255)

  This string can be NULL terminated although the NULL is not required for parsing.

Notes:

1. aaa and rrr are ASCII-encoded decimal numbers with a range of 0 to 255. They identify the Action Code and Retry Count, respectively, for the associated TPS server. Internally, to the IP Phone 2004, they are stored as one octet (0x00..0xFF). These fields must be no longer than three digits.
2. The first server is always considered the primary, and the second server always considered secondary.

Copyright © 2003-2010 Nortel Networks. All Rights Reserved.

Notes:

3. If only one server is required, terminate the primary TPS sequence immediately with (.) instead of (;).
   Example: Norteli2004- A,iii.jjj.kkk.lll:ppppp,aaa,rrr
4. The valid options are one server or two servers (0, 3, or other numbers are not allowed).
5. The Action code values are:
   - 0 - reserved
   - 1 - UNIStim Hello (currently only this value is a valid choice)
   - 2 to 254 - reserved
   - 255 - reserved
6. iii,jjj,kkk,lll are ASCII-encoded, decimal numbers representing the IP address of the server. They need not be three digits long because the (.) and (:) delimiters guarantee parsing. For example, '001', '01', and '1' are all parsed correctly and interpreted as value 0x01 internal to the IP Phone 2004. These fields must be no longer than three digits each.
7. ppppp is the port number in ASCII-encoded decimal. It need not be five digits long because the (:) and (,) delimiters guarantee parsing. For example, '05001', '5001', '1', and '00001' are all parsed correctly and accepted as correct. The valid range is 0 to 65 535 (stored internally in the IP Phone 2004 as hexadecimal in the range 0 to 0xFFFF). This field must be no longer than five digits.
8. In all cases, the IP Phone 2004 treats the ASCII-encoded numbers as decimal values and ignores all leading zeros. More specifically, a leading zero does not change the interpretation of the value to be OCTAL encoded. For example, 0021, 021, and 21 are all parsed and interpreted as decimal 21.

Quality of Service checklist for voice over WLAN applications

The following QoS checklist pertains to voice over WLAN (VoWLAN) applications that use the WLAN Handset 2210/2211/2212.

1. why you need it, see the SpectraLink Voice Priority White Paper available from www.polycom.com.

2. WLAN Access points must be SVP- or View-compatible as tested by SpectraLink Corp. Nortel requires all WLAN networks that carry voice be SVP-enabled or use WMM to receive NETS and GNTS support. For more information about SVP Compatible APs, go to www.polycom.com.

Copyright © 2003-2010 Nortel Networks. All Rights Reserved.

3. Enable SVP in the APs. SVP must be enabled in all APs that carry voice traffic. Not all AP vendors use SVP terminology. Cisco 350,1100, and 1200 series APs, for instance, refer to SVP compatibility as Protocol 119 support. The SpectraLink Web site provides AP settings used in SVP compatibility testing. To download the AP configuration manuals, go to www.polycom.com.
4. Configure the admissions limit in the 2245 Wireless IP telephony manager. The value you chose limits high-priority clients such as voice terminals from overloading an AP. The Nortel-recommended value is 7. An admissions limit higher than 7 can severely limit bandwidth to data users when voice traffic is high. To increase bandwidth for data, lower the admissions limit so that fewer voice terminals handover to the AP. WLAN performance studies with 802.11b radios show that the admissions limit must not exceed 10.
5. Handsets require a relative signal strength (RSSI) of -70dB or better for high QoS. When the RSSI drops below -70dB, handsets attempt to handover to an AP with a higher RSSI.
6. Up to three APs can occupy the same area because 802.11b provides three nonoverlapping channels. Handsets require like-channels, between adjacent APs, to have 15-20dB of separation to achieve good QoS and to avoid ping-pong between APs, which impacts QoS by creating constant handover.
7. WLAN infrastructure must be configured for high performance with delay between 221x handset and 2245 less than 100 ms, less than 1% packet loss and less than 30 ms jitter. WLAN networks that previously only supported data applications sometimes cannot meet this performance criteria and consequently are not be suitable for voice services.
8. RF cochannel interference reduces both the capacity and reach of WLAN networks. Use site surveys to plan coverage areas and scan them to insure that Rogue APs are not present. Cochannel interference can also be created by florescent light, microwave ovens, 2.4 GHz analog or digital telephones, Bluetooth adapters, and 2.4 GHz frequency-hopping applications such as first generation AP or DECT 2.4 GHz wireless.
9. Building construction can impact RF. Metal floors, metal walls, and metal ceilings can create RF signal reflections, and create a scenario known as multipath, which creates interference to the voice packet stream.
10. Handsets have a built-in Site Survey mode that shows the actual RSSI from the four strongest APs at any current location. Use Site Survey mode to determine holes in coverage that can create dropped calls or poor voice QoS.
11. Poor voice QoS received in handsets is caused, 70% of the time, by problems in the infrastructure, such as missing SVP enabled, poor RSSI coverage, cochannel interference, Ethernet duplex mismatch, excessive retransmission of packets, or other RF interference.

Copyright © 2003-2010 Nortel Networks. All Rights Reserved.

RF basics and AP configuration

The following points include the characteristics of a good RF environment that uses access point parameters for Nortel wireless telephone voice communications. Only channels 1, 6, and 11 are used.

- Disable auto-channel select features and use fixed channels.
- Fix the transmit (TX) power setting and disable auto-power features.
- Ensure that access points have a consistent and same power setting, unless there is a compelling reason to deviate
- Configure areas where wireless telephone users can congregate with special care:
  - Position APs closer together to provide greater bandwidth for an area.
  - Turn down the AP TX power.

  It is a very complicated process to accomplish this task properly.
- Configure the wireless telephone transmit power levels to match the standard for the RF environment.

  Consider the antenna gain used on the access points when adjusting the wireless telephone power setting.
- Ensure that there is -70dBm RF signaling or better available in all areas designated for wireless telephone operation.

  For this signaling requirement, all four 802.11b data rates must be available to the wireless telephones. The four 802.11b data rates are: 1Mb/s, 2Mb/s, 5.5Mb/s, and 11Mb/s.

  The best configuration is for all four to be configured to Basic or Required. For manufacturer-specific settings, see the guidelines for Nortel WLAN Handset 6120/6140. Define this parameter, as Basic or Required, in the AP and configure the following:
  - 802.11g data rates can be configured to Enabled.
  - Multicast packets use only 802.11b data rates configured to Basic or Required.
  - If 802.11 wireless devices are used, 5.5Mb/s and 11Mb/s can require the parameter be configured to Enabled or Supported, rather than Basic.

    Ensure that there is a compelling reason to do so, before you make this change.
- Configure the Beacon interval to 100 ms and DTIM to 3.
- Use appropriate security mechanisms for the wireless telephones and the requirements of the environment:

Copyright © 2003-2010 Nortel Networks. All Rights Reserved.

— Nortel WLAN IP Telephony telephones support WEP, WPA-PSK, or WPA2-PSK.

— Nortel recommends that you always use Open Authentication because it is more secure.

— You can use a No WEP temporary SSID during troubleshooting so that you can gather wireless data with visibility into the SpectraLink Radio Protocol (SRP) data structures.

After troubleshooting is complete, disable this temporary SSID.

- Ensure 15% to 20% cell overlap between AP signal coverage areas.
- Always use two antennas on each AP.

— Enable diversity in each AP.

— Use full diversity in each AP, not partial or one-way diversity.

— Make this the standard for the RF environment.

Very special circumstances must exist before you make changes.

- Provide priority for IP protocol 119 packets:

— Assign voice packets to an AP QoS Class of Service with a latency of 10 ms or less.

— Configure priority for both directions in both interfaces.

Priority gets the voice packets ahead of the queue inside the AP, whether the interface is 802.11b radio or Ethernet.

— Configure Voice Radio Contention Window Minimum to 0.

— Configure Voice Radio Contention Window Maximum to 0.

— Configure Voice Fixed Slot Size to 2.

— Configure Voice Transmit Opportunity to 0.

On the Cisco Aironet 1200 Series with code 12.3(8)JA3 or later, click WFA Default on QoS Radio 802.11g. Access the Categories page and then configure the parameters for voice. This version has two boxes to configure for each parameter. Do not click Optimize for Voice.

- Enable WiFi Multi-Media (WMM) on the radio interface.
- Use VLAN support in the AP and in the network for security and management:

— Assign the voice SSID to a VLAN.

— Enable the voice VLAN across the network between the AP, to the SVP, to the Signaling Server, to the Call Manager and all components in between.

— Assign all devices in this VLAN to one subnet.

Copyright © 2003-2010 Nortel Networks. All Rights Reserved.

  - Ideally, there is no routing between any network devices used for voice communication.
  - If routing is necessary, keep it in the back-end, between the SVP and PBX Call Server. Keep routing short and quick.

There are other access point parameters necessary for the proper operation of voice communications. Often, these are not adjustable. By specifying IP protocol 119 the following parameters are enabled on the voice path in the access point:

- Voice packet retry limit of three

  If a voice packet is not ACKed, it is retried three times and then dropped. This parameter must be enabled in the code to be able to control the number of packet retries and limit them to three. There are access points that identify IP protocol 119 (SpectraLink voice packets), to limit packet retries to three and other access points simply identify voice transmissions to limit retries.

- Round Robin Queuing

  During voice packet retry transmissions, the AP can also transmit other voice packets in the queue. This ability prevents other wireless telephones that use the AP from having their voice communications held up while retries occur. This causes all other wireless telephones to have poor audio while one wireless telephone is in a retry state.

These parameters can be invoked by specifying the voice profile or IP protocol 119 < 10 ms latency. Disable the following parameters:

- Dynamic Transmit Power at the Control (DTPC) for wireless clients
- AP Dynamic TX Power (or configure to On Demand Only)
- AP Dynamic Channel Select (or configure to On Demand Only)
- Intrusion Detection System (IDS) involvement

  IDS causes the AP to go off channel and listen for other wireless clients and APs. This causes degraded voice quality.

- Load balancing at the AP for clients and network
- Interference detection and avoidance
- Coverage hole detection and correction
- Client Holdoff Time
- EAP or MAC Reauthentication interval
- TKIP MIC Failure Holdoff Time

Copyright © 2003-2010 Nortel Networks. All Rights Reserved.

Troubleshooting

Ensure that the WLAN IP Telephony and PBX product mix lines up with the compatibility matrix in the current Product Bulletin.

If the site does not conform, it is not classified as a supported installation.

Diagnosis flows

The following sections provide information about the troubleshooting process for different types of issues.

Call or signalling-related issues

Signaling issues are not normally a result of an issue with the IP data network. However, if an IP data network is congested or configured incorrectly, signaling traffic can be affected. Because call signaling is normally a combination of H.323 (TCP)- and Reliable User Datagram Protocol (RUDP) (IP Sets)-based traffic, the packets usually reach the destination, barring any IP network configuration issues. However, these packets could drop and cause excessive retransmission and delay. As an example, the IP phones keep-alive communication with the signaling server can be affected.

Table 52
Typical call-related issues

Issue	Type of issue	Check for
Unable to place a call	Network	IP phone: IP connectivity to Signaling server IP connectivity issues to other IP sets Excessive congestion or retransmissions Analog or digital phone: IP trunk connectivity issues
	Product	IP, analog, or digital phone: Phone configuration Dial plan
IP phone resetting	Network	IP connectivity to Signaling server Network congestion
	Product	Incorrect phone configuration
Call disconnects or drops during a conversation	Network	Intermittent network congestion that affects the keep-alive
	Product	Signaling issues Incorrect configuration

Copyright © 2003-2010 Nortel Networks. All Rights Reserved.

Voice-quality issues

The transport, or IP data network, are the most likely causes of voice-quality issues. In some circumstances, product issues (such as echo or Digital Signal Processor (DSP) errors) can cause problems with voice quality. The data network does not introduce echo into a conversation, but it can enhance existing echo.

In a converged environment, voice competes with data traffic for bandwidth and processor time. As a result, the IP data network must be optimized for efficient processing of the real-time voice packets.

Table 53
Typical voice quality issues

Issue	Type of issue	Check for
Choppy voice	Network (usually)	Network delay caused by: Excessive intermittent end-to-end round-trip delay Congestion Queuing Network configuration errors
		Packet loss caused by: Physical errors in data network Network configuration errors
First or last part of word syllables missing	Product (usually)	Incorrect Voice Activity Detection (VAD) configuration OR Incorrect AP configuration (if the issue occurs only during roaming)
Clicks or pops heard during conversation		Packet loss, cause depends on the codec
One-way speech path	Network	IP routing issues Congestion issues
	Product	Incorrect configuration
Voice delay (users talk over each other)	Network	Excessive network delay
Echo	Network	Data network can enhance echo
	Product (primarily)	

Copyright © 2003-2010 Nortel Networks. All Rights Reserved.

Handset error messages

Table 54 "Handset error messages" (page 245) shows error messages that appear on the liquid crystal diode (LCD) display of the wireless handsets.

Table 54
Handset error messages

Short	Error code	Description	Action
Assert	Assert Errors	The phone detects possible network errors and cannot recover without configuration modification.	Verify the AP settings: data rates and fragmentation threshold. Use the Configuration Cradle to capture the assert error and then send the error to Nortel GNTS.
Code	Bad Code Type	The license management setting on phone is incorrect.	Adjust the license management setting.
DHCP	DHCP Error(s)	A problem communicating with DHCP server exists.	Troubleshoot the DHCP server configuration and the network.
DHCP	Can’t Renew DHCP	The DHCP server is not responding to a lease-renewal attempt.	Troubleshoot the DHCP server configuration and the network.
Duplicate	Duplicate ID	Two phones are configured with the same IP address.	Configure a valid static IP address for the phone. Check the DHCP configuration.
ESSID	Bad ESSID	The ESSID on the phone does not match the SSID on the AP.	Configure the correct ESSID statically on the phone.
Flash Config	Flash Config Error	The internal configuration of the phone is corrupt.	Restore the phone defaults and enter the configuration information.
No Net	No Net Found	The ESSID on the phone does not match the SSID on the AP.	Configure the correct ESSID statically on the phone.
No Net	No Net Access	The security settings on the phone do not match the security settings on the AP.	Check the AP security settings and configure the security settings for the phone to match.

Copyright © 2003-2010 Nortel Networks. All Rights Reserved.

Table 54
Handset error messages (cont'd.)

Short	Error code	Description	Action
PBX	No PBX	The phone is not communicating with the PBX.	Check the cross connects, bridge clips, punch downs on demarcation block, amphenol tail. and PBX (see if the extension is built correctly).
SVP	No SVP Response	The phone cannot communicate with the Nortel WLAN Handset 6120/6140.	Configure the Ethernet switch port and SVP to 100/full. Forward the DHCP option 151 to the IP of the WLAN IP Telephony Manager 2245. Verify the settings on the AP. Verify that there is no 2.4 Ghz interference of any kind.
SVP	No SVP IP	No static IP entered into the phone for the Nortel WLAN Handset 6120/6140.	Check for a valid IP in the phone. Check the license management configuration. Compare a working phone code to the nonworking phone code.
SW	No SW Found	No phone code is found on the TFTP server.	Point the TFTP software to the correct directory that contains valid code.
System	System Locked	Nortel WLAN Handset 6120/6140 is locked.	Dial in and verify that system is locked. Soft reset the Nortel WLAN Handset 6120/6140 infrastructure through the menu system.
TFTP	TFTP Error(s)	A failure occurred during the TFTP software update.	Check the TFTP software (SolarWinds is not compatible). Check the TFTP configuration. Forward option 66 in the DHCP scope, to the IP address of the TFTP server.

Timing information

The WLAN IP Telephony Manager 2245 sends payload packets to the handset every 30 ms in a 5 ms window. The handsets are likely to experience issues if the jitter between the WLAN IP Telephony Manager 2245 and the AP is greater than 5 ms. Ideally, jitter in this part of the network is 1 ms or less.

Copyright © 2003-2010 Nortel Networks. All Rights Reserved.

Table 55
Timing

WLAN IP Telephony Manager 2245 to the AP	Handset to the WLAN IP Telephony Manager 2245
Delay ≤ 100 ms	Delay ≤ 100 ms
Jitter ≤ 1 ms	Jitter ≤ 30 ms
Packet loss ≤ 2%	Packet loss ≤ 2%

The handset sends a handshake to the WLAN IP Telephony Manager 2245 every 30 seconds. If no response is received from the WLAN IP Telephony Manager 2245, the handset tries four more times, for a total of five attempts. If none of these get a response from the WLAN IP Telephony Manager 2245, the handset attempts to find a different AP and repeats the above handshake sequence. If the handset cannot find another AP or the second attempt fails, the No SVP Response message appears on the handset LCD display.

Diagnostic Tools

Run Site Survey, Diagnostics Mode, and Syslog Mode are provided to assist the WLAN administrator to evaluate the functioning of the handset and the VoWLAN system. These tools are enabled from the handset Admin menu.

Run Site Survey for the WLAN Handset 2210/2211/2212

Site Survey is used to evaluate the facility coverage before certifying that an installation is complete. It can also be used at any time to evaluate coverage by testing signal strength, to gain information about an AP, and to scan an area to look for all APs, regardless of ESSID. The information available through Site Survey includes:

- ESSID
- beacon interval
- information regarding support of various protocols and standards, as required
- current security configuration

When Run Site Survey begins, it is in single ESSID mode. Press the **Any** soft key to switch to all APs (regardless of ESSID) mode; the **Any** soft key changes to **MyID**. The display looks like the following in multiple AP mode:

Copyright © 2003-2010 Nortel Networks. All Rights Reserved.

```
111111 -22 33       444

111111 -22 33       444

111111 -22 33       444

111111 -22 33       444

MyID                Detl
```

where

111111 = last three octets of the ESSID for the discovered AP
22 = signal strength of the specified AP
33 = channel number of the specified AP
4444 = DTIM interval configured for the specified AP
MyID = soft key to toggle between single and any ESSID mode
Detl = soft key to toggle between summary and detail screens

Press the **Detl** soft key to view the details, as follows:

```
i:bbbbb sn ch bcn

eeeeeeeeeee DGHI

rrrrrrrrrrrrr+xxxx

mmm G:gggg P:pppp
Any                     Smry
```

where

i = index of selected AP (range: 0-3)
bbbbb = last three octets of the ESSID for a discovered AP
sn = signal strength in -dBm
ch = channel
bcn = beacon interval
eeeeeeeeeee = ESSID (up to first 11 characters)
DGHI = standards supported
rrrrr = rates supported (example: 1b2b5b11b)
+ = more rates supported than displayed
xxxx = WMM or UPSD if supported
mmmm = security mode
G:gggg = group key security

Copyright © 2003-2010 Nortel Networks. All Rights Reserved.

P:pppp = pair-wise key security
Any = soft key to toggle between single and multiple ESSID mode
Smry = soft key to return to summary display

Run Site Survey for the WLAN Handset 6120/6140

Site Survey is used to evaluate the facility coverage before certifying that an installation is complete. It can also be used at any time to evaluate coverage by testing signal strength, to gain information about an AP, and to scan an area to look for all APs, regardless of SSID. The information available through Site Survey includes:

- SSID
- beacon interval
- information regarding support of various protocols and standards, as required
- current security configuration

When Run Site Survey begins, it is in single SSID mode. Press the Any soft key to switch to all APs (regardless of SSID) mode; the Any soft key changes to MyID. The display looks like the following in multiple AP mode:

111111 -22 33	444
111111 -22 33	444
111111 -22 33	444
111111 -22 33	444
MyID	Detl

where

111111 = last three octets of the SSID for the discovered AP
22 = signal strength of the specified AP
33 = channel number of the specified AP
4444 = DTIM interval configured for the specified AP
MyID = soft key to toggle between single and any SSID mode
Detl = soft key to toggle between summary and detail screens

The following display shows three APs configured with an SSID that matches that of the handset. The first has a signal strength of –28dBm, and is configured on channel 2 with a beacon interval of 100 ms. The

Copyright © 2003-2010 Nortel Networks. All Rights Reserved.

second has a signal strength of –48dBm, and is configured on channel 6 with a beacon interval of 200 ms. The third has a signal strength of –56dBm and is configured on channel 11 with a beacon interval of 100 ms.

ab7bc8 -28 02	100
2ae578 -48 06	200
2ae596 -56 11	100
Any	Detl

When you select Any SSID mode, the summary display contains the first six characters of the APs SSID instead of the beacon interval, as shown in the following example.

ab7b -28 02	ALPHA
2ae5 -48 06	WSMTES
2ae5 -56 11	voice
Any	Detl

In detail mode, the display appears as follows. The left and right arrow keys move between AP indices.

```
i:bbbbb sn ch bcn

eeeeeeeeeee DGHI

rrrrrrrrrrrrr+xxxx

mmm G:gggg P:pppp
Any                        Smry
```

where

i = index of selected AP (value is from 0 to 3 inclusive)
bbbbb = last three octets of the SSID for a discovered AP
sn = signal strength in -dBm
ch = channel
bcn = beacon interval
eeeeeeeeeee = SSID (up to first 11 characters)
DGHI = standards supported

Copyright © 2003-2010 Nortel Networks. All Rights Reserved.

rrrrr = rates supported—basic rates have a b following the rate
+ = more rates supported than displayed
xxxx = WMM or UPSD if supported
mmmm = security mode
G:gggg = group key security
P:pppp = pair-wise key security
Any/MyID = soft key to toggle between single and multiple SSID mode
Detl/Smry = soft key to toggle between the multiple AP display (summary) and the single AP display (detail)

ATTENTION
Numbers racing across the handset display indicate that AP information is being obtained. A Waiting message indicates that the system is not configured properly and the handset cannot find any APs.

Diagnostics Mode

Diagnostics Mode evaluates the overall quality of the link between the handsets, AP, and the infrastructure equipment (call server, WLAN IP Telephony Manager 2245, and gateways). Diagnostics Mode can be used when the handset is active.

When Diagnostics Mode is activated in the Admin menu, the handset enters the diagnostic state. The handset can display diagnostics any time it is on a call.

Pressing the **Menu** key displays a number of diagnostic counters. Five screens of counters can be displayed by pressing the **Menu** key to scroll through the following screens:

- Screen 1—displays counters for missed receive packets, missed transmit packets, receive retry count, and transmit retry count.
- Screen 2—displays jitter delta, last successful transmit data rate, and gateway type.
- Screen 3—displays a list of APs and some of their details.
- Screen 4—displays association and reassociation counts.
- Screen 5—displays security error count and sequence number for last security error.

After all the counters are displayed, the screen returns to the normal off-hook display.

The screen number appears on the top line of the screen.

Copyright © 2003-2010 Nortel Networks. All Rights Reserved.

Diagnostics Screen 1 displays the following information:

MissedRcvCnt	nnnnn
MissedXmtCnt	nnnnn
RxRetryCount	nnnnn
TxRetryCount	nnnnn

where

MissedRcvCnt is the missed receive packet count since power up.
MissedXmtCnt is the missed transmit packet count since power up.
RxRetryCount is the receive retry count since power up.
TxRetryCount is the transmit retry count since power up.

Diagnostics Screen 2 displays the following information:

Jitter	nnnnn
LastRate	nnnnn
GatewayType	mnemo

where

Jitter is the current delta from the desired jitter buffer depth, in microseconds.
LastRate is the last successful transmit data rate.
GatewayType is a mnemonic that indicates the gateway type. The mnemonic is one of:

SAWA2	all phones are rate limited to 2 Mb because an old 2 Mb handset is on the network (not applicable for the WLAN Handset 6120 and the WLAN Handset 6140)
2Mb	old style 2 Mb (not applicable for the WLAN Handset 6120 and the WLAN Handset 6140)
11Mb	New style 11 Mb (for all handsets)

Diagnostics Screen 3 displays a list of the APs that are heard, in the following format:

C : mmmm ch - ss	aid
1 : mmmm ch - ss	mnem

Copyright © 2003-2010 Nortel Networks. All Rights Reserved.

2 : mmmm ch - ss	mnem
3 : mmmm ch - ss	mnem

where

C is the AP currently in use.
1, 2, and 3 are the candidate APs.
mmmm is the hexadecimal number comprised of the last two octets of the AP MAC address.
ch is the channel number that the AP is configured on.
ss is the signal strength for the AP in dBm.
aid is the Association ID of the currently associated AP.
mnem is a mnemonic that indicates why the handset did not hand off to this candidate:

Unkn	reason unknown
Weak	signal strength too weak
Rate	One or more basic rates not supported
Full	AP cannot handle bandwidth requirements
AthT	Authentication Timeout
AthF	Authentication Failure
AscT	Association Timeout
AscF	Association Failure
SecT	Security Timeout
SecF	Security Failure
Cnfg	Configuration error—AP is not configured correctly (check security, QoS mode, or network infrastructure)

Diagnostics Screen 4 displays the following information:

AssocCount	nnnnn
ReAssocCount	nnnnn
AsssocFailure	nnnnn
ReAssocFail	nnnnn

where

AssocCount is the association count since power up.
ReAssocCount is the reassociation count since power up.
AssocFailure is the number of association failures since power up.
ReAssocFail is the number of reassociation failures since power up.

Copyright © 2003-2010 Nortel Networks. All Rights Reserved.

Diagnostics Screen 5 displays the following information:

Sec-ErrCount	nnnnn
LstSecErrSeq	nnnnn

where

Sec-ErrCount is the security error count since power up.

LstSecErrSeq is the MAC frame sequence number with the last security error.

Syslog Mode

A Syslog Server must be present on the network so that the handset can send log messages and have them saved. The Syslog Server IP address can be configured using DHCP or statically configured.

ATTENTION
If the Syslog Server address is blank (000.000.000.000 or 255.255.255.255) or the handset is using DHCP and no option 7 is received from the DHCP server, the handset does not send any syslog messages.

Each syslog message includes the following:

- Date and time (to 1100th of a second) since the handset power on (configured to January 1 00:0:00); requires an SNTP server
- WLAN Handset MAC address
- WLAN Handset IP address
- Sequence number
- plus, additional items, based on the message type, as shown in Table 56 "Syslog message contents" (page 255).

Message example:

```
Jan 1 00:01:26 0090.7a02.2a1b (172.16.0.46) [001a] RStat: AP
00:40:96:48:1D:0C (-56dBm), Sent 783523, Recvd 791342, MSnt 245, MRcd
5674, BSnt 43, BRcd 10783, TX drop 43 (0.0%), TX retry 578 (1.2%), RX retry
1217 (1.6%).
```

Table 56 "Syslog message contents" (page 255) contains the contents of the syslog messages.

Copyright © 2003-2010 Nortel Networks. All Rights Reserved.

Table 56
Syslog message contents

Syslog message	Contents
Failed Handoff (sent whenever the handset decided to hand off, but failed trying)	Failed AP MAC Failed AP signal strength Current AP MAC Current AP signal strength Failure reason
Successful Handoff	New AP MAC New AP signal strength Old AP MAC Old AP signal strength Reason for handoff Other candidate APS: • MAC • Signal strength • Reason not used
Security Error	AP MAC AP signal strength Security mode Error details (mode dependent)
Call Start	Call type (telephony, OAI, PTT) AP MAC AP signal strength
Call End	AP MAC AP signal strength

Copyright © 2003-2010 Nortel Networks. All Rights Reserved.

Table 56
Syslog message contents (cont'd.)

Syslog message	Contents
Audio stats (AStat)	AP MAC AP signal strength Payload size (in ms) Payloads sent Payloads received Payloads missed (not received) Payloads missed rate (over last 5 seconds) Payloads late Payloads late rate (over last 5 seconds) Average jitter
Audio threshold (AThresh) exceeded (Sent if payloads missed rate or payloads late rate exceeds 2%, or if the average jitter is over 2 ms)	AP MAC AP signal strength Payload size (in ms) Payloads sent Payloads received Payloads missed (not received) Payloads missed rate (over last 5 seconds) Payloads late Payloads late rate (over last 5 seconds) Average jitter

Copyright © 2003-2010 Nortel Networks. All Rights Reserved.

Table 56
Syslog message contents (cont'd.)

Syslog message	Contents
Radio stats (NStat)	AP MAC AP signal strength Directed packets sent Directed packets received Multicast packets sent Multicast packets received Broadcast packets sent Broadcast packets received TX dropped count TX drop rate (over last 5 seconds) TX retry count TX retry rate (over last 5 seconds) RX retry count RX retry rate (over last 5 seconds)
Radio threshold (NThresh) exceeded (Sent if TX drop rate exceeds 2%, or TX or RX retry rate exceeds 5%)	AP MAC AP signal strength Directed packets sent Directed packets received Multicast packets sent Multicast packets received Broadcast packets sent Broadcast packets received

Copyright © 2003-2010 Nortel Networks. All Rights Reserved.

Table 56
Syslog message contents (cont'd.)

Syslog message	Contents
	TX dropped count TX drop rate (over last 5 seconds) TX retry count TX retry rate (over last 5 seconds) RX retry count RX retry rate (over last 5 seconds)
VPN: Established IKE phase 1 SA, renew in xs VPN: Established IKE phase2 SA yy:yy, renew in xs (a phase1 message follows the phase 2 message, sent whenever a phase 1 or phase 2 security association completes)	Expiration time and security association identifiers, if applicable. xs is the number of seconds yy:yy stands for the two eight-digit SA numbers for send and receive
VPN: phase2 Unexpected message VPN: phase2 Initiated by VN server VPN: phase2 INFO Delete payload	none

Table 57
Syslog reason codes

Reason code number	Meaning
0	OK
1	TOO FEW AVERAGE PROBES
2	WORSE SIGNAL
3	INVALID SSID
4	NO PARAMS FOUND
5	BAD RATES
6	OFF CHANNEL PROBE RESP
7	AP TOO BUSY
8	AUTH TIMEOUT
9	ASSOC TIMEOUT
10	FAILED AUTHENTICATION

Copyright © 2003-2010 Nortel Networks. All Rights Reserved.

Table 57
Syslog reason codes (cont'd.)

Reason code number	Meaning
11	FAILED ASSOCIATION
12	SOFT NEIGHBOR
13	NO SIG IMPROVEMENT
16	NO KEEPALIVE
17	LOST AUDIO
18	NO RESPONSE
19	NO PRIVACY
20	APP UNHAPPY
21	DISASSOCIATED
22	NO HANDOFF
23	HANDOFF
24	INITIAL ASSOC
25	LOST AP
26	TX FAILURES
27	CHANGING RATES
28	UNDEFINED
29	EAP START TIMEOUT
30	LEAP CHALLENGE TIMEOUT
31	EAP SUCCESS TIMEOUT
32	LEAP CHALLENGE RESPONSE TIMEOUT
33	NONCE CCKM TIMEOUT
34	RSNIE AP TIMEOUT
35	NONCE GTK TIMEOUT
36	EAPOL LOGOFF
37	EAPOL FAILURE
38	NO WPA ELEMENT
39	BAD MIC
40	BAD PROBE RESP
41	BAD CAP INFO AD HOC
42	ACTION TIMEOUT
43	FAILED ACTION

Copyright © 2003-2010 Nortel Networks. All Rights Reserved.

Table 57
Syslog reason codes (cont'd.)

Reason code number	Meaning
44	DELTS
45	QOS REQUIRED
46	CHANGED LISTEN INTERVAL

Data capture

Use the information presented in this section to begin capturing the correct data for analysis.

Questions

Ask the following questions to help isolate the source of a problem:

- Is the issue present with handsets that are associated to the same AP—yes or no?
- Is the issue present with handsets that are associated to different APs, which are associated to same controller—yes or no?
- Is the issue present with handsets that are associated to different APs, which are associated to two different controllers in the same mobility group—yes or no?

Data checklist

Gather the following data from the site for analysis:

- wired ip sniffer trace on the mirrored port for the WLAN IP Telephony Manager 2245
- wireless ip sniffer trace at the AP to which the test handset is associated
- syslog capture

  For more information, see "Syslog capture configuration" (page 262).
- logs of the event from the Signaling Server
- isetShow output from the Signaling Server or from the Voice Gateway Media Card (VGMC) running as Leader
- screenshots of each screen in the WLAN IP Telephony Manager 2245
- screenshots of the DHCP server scope with the fields fully expanded (no truncation of data in the view)

Copyright © 2003-2010 Nortel Networks. All Rights Reserved.

Figure 36
DHCP scope

Option	Name	Vendor	Value	Class
003	Router	Standard	10.25.8.1	None
060	Class Identifier	Standard	Nortel-221x-A	None
066	TFTP Server	Standard	10.25.8.10	None
128	Nortel i2004	Standard	Nortel-i2004-A,172.25.11.11:4100,1.7.	None
151	2245 WLAN TM Master	Standard	10.25.8.11	None
152	2246 WLAN AG	Standard	10.28.8.21	None

Notes:

1. Before you begin the data capture, disable any encryption protocols so that the data can be analyzed. If this is not possible, you must supply the encryption keys.
2. Time sync the wired and wireless IP sniffer traces (to the second if possible) and note whatever difference is present. This is crucial for the captures to be analyzed as a whole event.
3. Include the Nortel case number and the capture date in the name of each file.
4. Use a compression program to compress the files before you send them. If the files are password protected, send the passwords in a separate e-mail.

ATTENTION
All captures, except the screenshots, must be concurrent during the same time frame that the problem scenario is executed. This ensures that each capture is for the same problem scenario.

Site-data required for the capture analysis

To analyze the captured data, certain site information is required. Ensure that the information is current for the time at which you obtain the captures. Gather the following information for your site:

- the MAC address of the test handset
- the alias IP of the test handset
- the DHCP supplied IP or manually configured static IP of the test handset
- the IP and MAC addresses of the WLAN IP Telephony Manager 2245
- the TLAN and ELAN IPs for the Signaling Servers
- the TLAN and ELAN IPs for the Voice Gateway Media Cards (VGMC)

Copyright © 2003-2010 Nortel Networks. All Rights Reserved.

- a network diagram

  For more information, see “Network diagram” (page 262).
- a site survey
- screenshots of the DHCP server scope with the fields fully expanded (no truncation of data in the view)
- the encryption protocol
- the software version of the WLAN IP Telephony Manager 2245
- the hardware version of the test handset
- the release (RLS) of the PBX software
- the version of the code that currently runs on the Signaling Servers
- the software version on the VGMCs
- the make, model and software version of the AP, the Controller or the WLAN Manager

Network diagram

For each element in the network, include the following information as it applies to each element:

- manufacturer
- model identification
- software version
- hardware version
- loadware version
- IP addresses
- MAC addresses
- port assignments
- VLANs
- other connectivity information

Syslog capture configuration

Configure DHCP Option 7 with the IP of the Syslog Server or, if you are not using DHCP, configure this manually as a static entry in the handset

Configure the IP of the Syslog Server in the WLAN IP Telephony Manager 2245: Network configuration > Syslog Server.

Copyright © 2003-2010 Nortel Networks. All Rights Reserved.

Configure the handset:

- Admin Menu > Diagnostics > Diagnostics mode on
- Admin Menu > Diagnostics > Syslog mode > full

If a Syslog Server is not available, use a public domain Syslog—for more information, see the KIWI Syslog Daemon available from www.kiwisyslog.com.

Signaling Server log capture

Use the CLI to obtain a log capture from the Signaling Server.

Procedure 29
Using the CLI to capture a Signaling Server log

Step	Action
1	Open a telnet session to the Signaling Server.
2	Start a file capture of the telnet session.
3	Use the level 2 pdt password for the system to enter pdt.
4	Change to the directory where the logs are stored. For more information, see the appropriate system documentation.
5	Determine the date stamps of the log files that cover the time frame for the problem scenario: `ll`
6	For a log file, run the command: `rdopen log000xx.rpt` The response from the SS is Reading log000xx.rpt.
7	For the same log file, run the command: `rdall`
8	Repeat Step 6 and Step 7 for each log file.
9	End the telnet file capture.
10	Zip the capture and send it to Nortel.
	--End--

General data capture

Before you run the show run-config or debug commands, enable text capturing on your Hyper terminal or Telnet application that you use to access the WLAN Security Switch 2270.

Copyright © 2003-2010 Nortel Networks. All Rights Reserved.

Multiple times is better—copy and paste the following commands on the WLAN Security Switch 2270 CLI, rather than typing them individually. The screen begins scrolling with output as soon as you type the commands.

- show run-config (from all WLAN Security Switch 2270s)
- show tech support
- show msglog

The wired sniffer must sniff the Gig port of the WLAN Security Switch 2270. No capture filter is required; get everything.

Obtain the wireless capture from the channel that the handsets currently use. Configure the wireless sniffer to capture from only one channel. To determine which channel, first show the client summary. Look for the MAC of the client showing status associated and note the name of the AP beside it. To see the channel that the AP operates on, show the advanced 802.11b summary.

Follow the steps in Procedure 30 “Obtaining the wired and wireless captures” (page 264), to capture data to send to Nortel for analysis.

Procedure 30
Obtaining the wired and wireless captures

Step	Action
1	Run the command: **debug airwave-director all enable** Let this command run for 5 to 7 minutes.
2	Run the command: **debug disable-all**
3	Run the following debug commands from the WLAN Security Switch 2270 (that you are testing) in the CLI: **debug dot11 mobile enable** **debug dot11 state enable** **debug mobility directory enable** **debug mobility handoff enable** **debug pem state enable** **debug pem events enable** **show debug**
4	Start the wireless and wired sniffer captures.
5	Initiate a handset to handset regular call or Push-to-talk call.
6	Continue the voice conversation for 1 to 2 minutes.
7	End the call that you established in Step 5.

Copyright © 2003-2010 Nortel Networks. All Rights Reserved.

8 End debug; copy and paste the following commands on the CLI:

```
debug disable-all
show debug
```

9 Stop the wired and wireless captures.

10 Zip the captures and send them to Nortel.

--End--

Scan for interference. MetaGeek Wi-Spy 2.4GHz Spectrum Analyzer is one low-cost option. For more information, go to www.metageek.net.

Capture assert error messages with the Configuration Cradle

One of the key features of the Configuration Cradle is the ability to extract assert error data when the handset (WLAN Handset 2210/2211/2212) encounters an exception condition and cannot recover from it gracefully. This dump contains information with which the design team can quickly isolate and fix the problem.

The Assert Error message appears on the LCD display after the handset detects a system error from which it cannot recover. The assert error data is stored in flash memory until you power cycle the handset. You can use the Configuration Cradle to retrieve this information as an .asrt file, which you can then send to Nortel technical support for further debugging.

Use the steps in Procedure 31 “Recording an assert error message” (page 265) to record and retrieve assert error data.

ATTENTION
Do not replace the battery pack before you perform the steps in Procedure 31 “Recording an assert error message” (page 265).

Procedure 31
Recording an assert error message

Step	Action
1	Write down the error message that appears on the LCD display.
2	While the Config program is running, remove the battery pack and place the handset in the Configuration Cradle.
3	Open the **File** menu and select **Get Assert Information**.
4	Browse to the location to which you want to save the .asrt file.
5	Click **Get Assert Data.** The handset uploads the .asrt file to the location that you specified in Step 4.

Copyright © 2003-2010 Nortel Networks. All Rights Reserved.

6 Call Nortel Technical Support and make arrangements to e-mail the file and error message from the display.

--End--

Network speech levels

Figure 37 "Network speech levels" (page 266) shows the network speech levels for digital sets—end-to-end performance.

Figure 37
Network speech levels

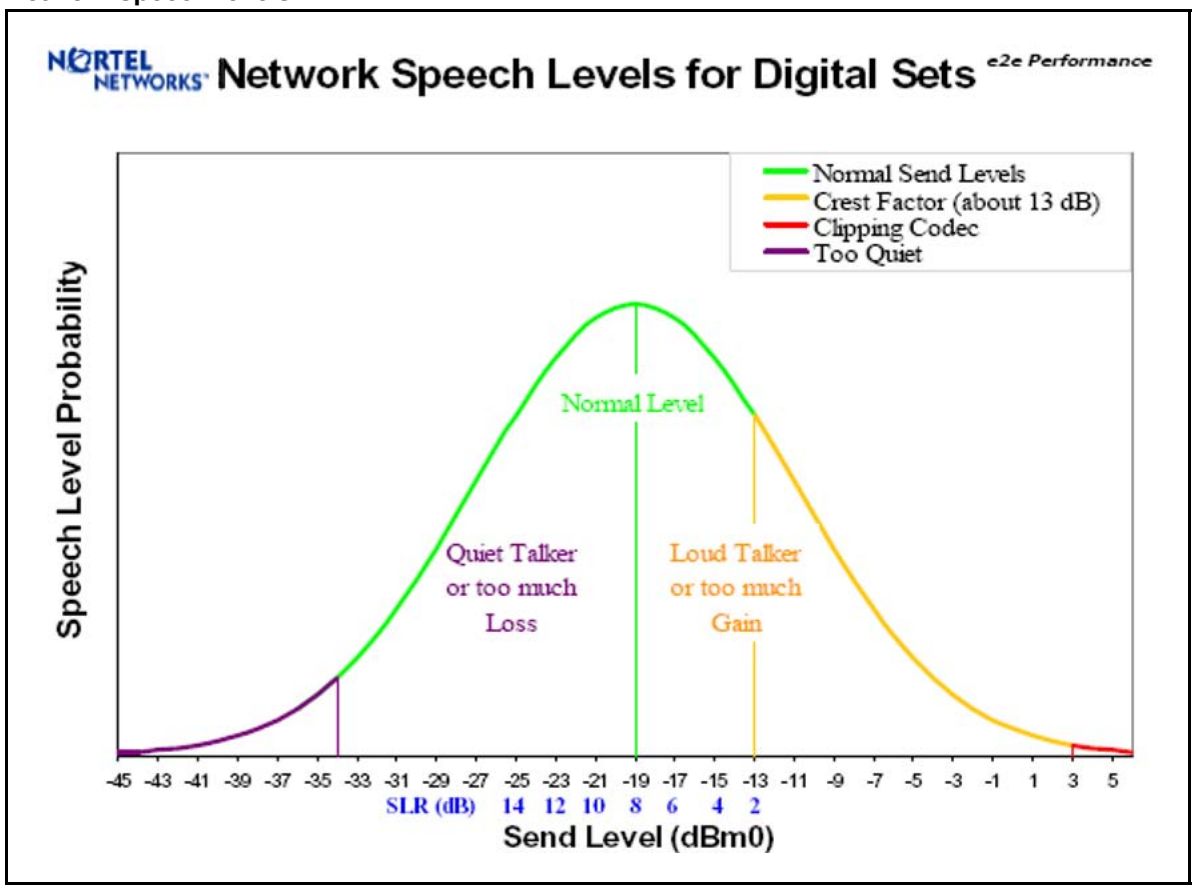

Reference documents

Table 58 "References" (page 267) lists reference documents and related-reading for this appendix.

Copyright © 2003-2010 Nortel Networks. All Rights Reserved.

Table 58
References

Source and type	Title	Revision	Comments
Nortel Product Bulletin	WLAN Handset 2210/2211	January 2006	Up-issue
Nortel NTP	553-3001-304	Standard 4.00 August 2005	(not applicable)
Nortel White Paper	Engineering a WLAN	(not applicable)	How to successfully deploy a WLAN
Nortel White Paper	[VoWLAN] Straight Talk on Converged Wireless LANs	(not applicable)	(not applicable)
Nortel White Paper	[QoE] Designing QoS-Enabled Networks for Voice & Data User Quality-of- Experience (QoE)	(not applicable)	(not applicable)
Nortel Technical Solution Guide	IP Telephony Client Deployment	January 2006 Version 1.0	(not applicable)
Nortel Technical Solution Guide	Solutions Guide for VoWLAN	January 2006 Version 1.0	(not applicable)
Nortel Checklist	QoS Checklist for VoWLAN using 2210 and 2211 & 2212 Handsets	Version 1.1	(not applicable)
Business Commu nications Review Article	Designing VOIP Networks: Lessons From The Edge	February 2003	(not applicable)
Nortel Configuration Guide	CS1000 & C200 Secure VOIP for SOHO & Telecommuters	1/31/2005 Version 1.1	Succession 1000 and Contivity 200 NAT traversal Solution
Nortel White Paper	Designing 802.11 Wireless LAN Networks	v1.0 December 2004	Design overview
Nortel Technical Support Bulletin	VoWLAN Implementation Best Practices	TSB- 0502001 02/01/2005	(not applicable)
SpectraLink White Paper	SpectraLink Voice Priority	5-03-edit	Quality of Service for voice traffic on wireless LANs
SpectraLink White Paper	Deploying NetLink Wireless Phones	Version 1.2.1 November 2005	Best practices

Copyright © 2003-2010 Nortel Networks. All Rights Reserved.

Table 58
References (cont'd.)

Source and type	Title	Revision	Comments
SpectraLink White Paper	NetLink Wireless Telephone WLAN Compatibility List	PN: 72-9000-00-W See the current version at the Polycom Web site.	NetLink Wireless Telephone WLAN Compatibility List
IEEE [802.11] IEEE Std 802.11	Wireless LAN Medium Access Control and Physical Layer Specifications	(not applicable)	(not applicable)
IEEE [802.11b] IEEE Std 802.11	Wireless LAN Medium Access Control and Physical Layer Specifications	(not applicable)	Higher-Speed Physical Layer Extensions in the 2.4 GHz Band
IEEE [802.11g] IEEE Std 802.11	Wireless LAN Medium Access Control and Physical Layer Specifications	(not applicable)	Further Higher Data Rate Extension in the 2.4 GHz Band
SpectraLink White Paper	Cisco 1100-1200- 1300 AP config/deploy guide	PN: 72-9962-00-A	(not applicable)
SpectraLink Configuration Note	Cisco Aironet 350/1100/1200 (DS) AP – IOS Operating System	PN: 72-9975-00-C beta	(not applicable)
SpectraLink Configuration Note	CISCO AP Setup for external radius for FSR	(not applicable)	(not applicable)
SpectraLink Configuration Note	CISCO external radius setup for FSR	(not applicable)	(not applicable)
SpectraLink Configuration Note	Airespace Wireless Enterprise Platform – AireOS	72_9974_00_B.pdf	Updated AUTORF settings

Copyright © 2003-2010 Nortel Networks. All Rights Reserved.

Appendix
Compatible Access Points

The Nortel Voice over Wireless LAN solution is supported on VIEW-certified Access Points (APs).

For a list of certified APs, go to the Polycom Web site www.polycom.com.

Copyright © 2003-2010 Nortel Networks. All Rights Reserved.

Copyright © 2003-2010 Nortel Networks. All Rights Reserved.

Index

10 Mbs 84
50 ms 92
70 ms 92
802.1 pq 95
802.1p tagging 95

A

Access Points (APs)
Compatible 269
Administration Console navigation 202
alarms 168
alarms on the WLAN IP Telephony Manager 2245 168
alarms, active 168
AP
configuration 240

C

Call Server 157
CFNA 172
checking in 157
Cisco 225
4400 Series WLAN Controller 226
Aironet 1200 series 225
Aironet 1200 Series 241
configuration examples 228
Codecs 92
Components 22
CS 1000 102

D

DHCP 85
options 232
server options 231
DiffServ 95
duplex mismatch 58, 170, 172

E

echo 172
Error Status screen 168
External Applications Server 95

F

filters 77
Full-duplex 58

G

G.711 92
G.723.1 92
G.729A 92
G.729B 92
Gain adjustment 93
gateway 75–76, 95, 134, 157, 160

H

half-duplex 84

I

ISM parameters 24

J

jitter 93
jitter buffer 92

L

Language 24
latency 93
Layer 2 port 95
Layer 2 QoS 95
Layer 2 switch port 95
Layer 3 port 95

Copyright © 2003-2010 Nortel Networks. All Rights Reserved.

locking the WLAN IP Telephony Manager 2245 162
loss plan 93
LTPS 157

M

master WLAN IP Telephony Manager 2245 72, 160
multicast addresses 77
Multicasting 77

N

network segments 77
No ring 172
node 92
non-master WLAN IP Telephony Server 2245 72
Nortel
  WLAN Security Switch 225
Nortel WLAN Security Switch 2270 226

P

packet loss 93
Planning worksheets 86
prevent new calls from starting 162
priority 95
Programmable rings and tones 93
Push-to-talk (PTT) 31, 77

Q

Quality of Service
  checklist 238

R

rack-mount unit 85
Receive Loudness Rating (RLR) 92
refresh 49
remote endpoint 92
reset the WLAN IP Telephony Manager 2245 162
RF
  basics 240
RLR 92
Roaming 76
Routers 77
RTCP 93
RTP 92

S

Security
  Virtual Private Network (VPN) 25
  Wi-Fi Protected Access (WPA) 24
  Wi-Fi Protected Access2 (WPA2) 25
  Wired Equivalent Privacy (WEP) 24
Send Loudness Rating (SLR) 92
site data-gathering
  tables 221
SLR 92
software updates 161
software versions 162
subnet 77
SVPServer
  Mounting 108
switches
  configuration 225

T

TFTP 162
Timing function 75
tone capability 93
troubleshooting 58, 157

U

UNIStim 92, 95
unzipped 49
Update software 161

V

Virtual Private Network (VPN) 25
VLAN 77
voice mail 172

W

Wi-Fi Protected Access (WPA) 24
Wi-Fi Protected Access2 (WPA2) 25
Wired Equivalent Privacy (WEP) 24
WLAN
  configuration 230
WLAN applications 238

Copyright © 2003-2010 Nortel Networks. All Rights Reserved.

Nortel Communication Server 1000

WLAN IP Telephony Installation and Commissioning

Release: 7.0
Publication: NN43001-504
Document revision: 05.01
Document release date: 4 June 2010

Copyright © 2003-2010 Nortel Networks. All Rights Reserved.

While the information in this document is believed to be accurate and reliable, except as otherwise expressly agreed to in writing NORTEL PROVIDES THIS DOCUMENT "AS IS" WITHOUT WARRANTY OR CONDITION OF ANY KIND, EITHER EXPRESS OR IMPLIED. The information and/or products described in this document are subject to change without notice.

Nortel, Nortel Networks, the Nortel logo, and the Globemark are trademarks of Nortel Networks.

All other trademarks are the property of their respective owners.

To provide feedback or to report a problem in this document, go to www.nortel.com/documentfeedback.

www.nortel.com

