# Fundamentals of Avaya Ethernet Routing Switch 3500 Series

Release 5.2
NN47203-102
Issue 03.01
March 2014

© 2014 Avaya Inc.

All Rights Reserved.

**Notice**

While reasonable efforts have been made to ensure that the information in this document is complete and accurate at the time of printing, Avaya assumes no liability for any errors. Avaya reserves the right to make changes and corrections to the information in this document without the obligation to notify any person or organization of such changes.

**Documentation disclaimer**

“Documentation” means information published by Avaya in varying mediums which may include product information, operating instructions and performance specifications that Avaya may generally make available to users of its products and Hosted Services. Documentation does not include marketing materials. Avaya shall not be responsible for any modifications, additions, or deletions to the original published version of documentation unless such modifications, additions, or deletions were performed by Avaya. End User agrees to indemnify and hold harmless Avaya, Avaya's agents, servants and employees against all claims, lawsuits, demands and judgments arising out of, or in connection with, subsequent modifications, additions or deletions to this documentation, to the extent made by End User.

**Link disclaimer**

Avaya is not responsible for the contents or reliability of any linked websites referenced within this site or documentation provided by Avaya. Avaya is not responsible for the accuracy of any information, statement or content provided on these sites and does not necessarily endorse the products, services, or information described or offered within them. Avaya does not guarantee that these links will work all the time and has no control over the availability of the linked pages.

**Warranty**

Avaya provides a limited warranty on Avaya hardware and software. Refer to your sales agreement to establish the terms of the limited warranty. In addition, Avaya’s standard warranty language, as well as information regarding support for this product while under warranty is available to Avaya customers and other parties through the Avaya Support website: http://support.avaya.com or such successor site as designated by Avaya. Please note that if you acquired the product(s) from an authorized Avaya Channel Partner outside of the United States and Canada, the warranty is provided to you by said Avaya Channel Partner and not by Avaya.

**Licenses**

THE SOFTWARE LICENSE TERMS AVAILABLE ON THE AVAYA WEBSITE, HTTP://SUPPORT.AVAYA.COM/LICENSEINFO OR SUCH SUCCESSOR SITE AS DESIGNATED BY AVAYA, ARE APPLICABLE TO ANYONE WHO DOWNLOADS, USES AND/OR INSTALLS AVAYA SOFTWARE, PURCHASED FROM AVAYA INC., ANY AVAYA AFFILIATE, OR AN AVAYA CHANNEL PARTNER (AS APPLICABLE) UNDER A COMMERCIAL AGREEMENT WITH AVAYA OR AN AVAYA CHANNEL PARTNER. UNLESS OTHERWISE AGREED TO BY AVAYA IN WRITING, AVAYA DOES NOT EXTEND THIS LICENSE IF THE SOFTWARE WAS OBTAINED FROM ANYONE OTHER THAN AVAYA, AN AVAYA AFFILIATE OR AN AVAYA CHANNEL PARTNER; AVAYA RESERVES THE RIGHT TO TAKE LEGAL ACTION AGAINST YOU AND ANYONE ELSE USING OR SELLING THE SOFTWARE WITHOUT A LICENSE. BY INSTALLING, DOWNLOADING OR USING THE SOFTWARE, OR AUTHORIZING OTHERS TO DO SO, YOU, ON BEHALF OF YOURSELF AND THE ENTITY FOR WHOM YOU ARE INSTALLING, DOWNLOADING OR USING THE SOFTWARE (HEREINAFTER REFERRED TO INTERCHANGEABLY AS “YOU” AND “END USER”), AGREE TO THESE TERMS AND CONDITIONS AND CREATE A BINDING CONTRACT BETWEEN YOU AND AVAYA INC. OR THE APPLICABLE AVAYA AFFILIATE (“AVAYA”).

Avaya grants you a license within the scope of the license types described below, with the exception of Heritage Nortel Software, for which the scope of the license is detailed below. Where the order documentation does not expressly identify a license type, the applicable license will be a Designated System License. The applicable number of licenses and units of capacity for which the license is granted will be one (1), unless a different number of licenses or units of capacity is specified in the documentation or other materials available to you. “Designated Processor” means a single stand-alone computing device. “Server” means a Designated Processor that hosts a software application to be accessed by multiple users.

**Heritage Nortel Software**

“Heritage Nortel Software” means the software that was acquired by Avaya as part of its purchase of the Nortel Enterprise Solutions Business in December 2009. The Heritage Nortel Software currently available for license from Avaya is the software contained within the list of Heritage Nortel Products located at http://support.avaya.com/LicenseInfo/ under the link “Heritage Nortel Products”, or such successor site as designated by Avaya. For Heritage Nortel Software, Avaya grants Customer a license to use Heritage Nortel Software provided hereunder solely to the extent of the authorized activation or authorized usage level, solely for the purpose specified in the Documentation, and solely as embedded in, for execution on, or (in the event the applicable Documentation permits installation on non-Avaya equipment) for communication with Avaya equipment. Charges for Heritage Nortel Software may be based on extent of activation or use authorized as specified in an order or invoice.

**Copyright**

Except where expressly stated otherwise, no use should be made of materials on this site, the Documentation, Software, Hosted Service, or hardware provided by Avaya. All content on this site, the documentation, Hosted Service, and the Product provided by Avaya including the selection, arrangement and design of the content is owned either by Avaya or its licensors and is protected by copyright and other intellectual property laws including the sui generis rights relating to the protection of databases. You may not modify, copy, reproduce, republish, upload, post, transmit or distribute in any way any content, in whole or in part, including any code and software unless expressly authorized by Avaya. Unauthorized reproduction, transmission, dissemination, storage, and or use without the express written consent of Avaya can be a criminal, as well as a civil offense under the applicable law.

**Third Party Components**

“Third Party Components” mean certain software programs or portions thereof included in the Software or Hosted Service may contain software (including open source software) distributed under third party agreements (“Third Party Components”), which contain terms regarding the rights to use certain portions of the Software (“Third Party Terms”). As required, information regarding distributed Linux OS source code (for those Products that have distributed Linux OS source code) and identifying the copyright holders of the Third Party Components and the Third Party Terms that apply is available in the Documentation or on Avaya’s website at: http://support.avaya.com/Copyright or such successor site as designated by Avaya. You agree to the Third Party Terms for any such Third Party Components

**Preventing Toll Fraud**

“Toll Fraud” is the unauthorized use of your telecommunications system by an unauthorized party (for example, a person who is not a corporate employee, agent, subcontractor, or is not working on your company's behalf). Be aware that there can be a risk of Toll Fraud associated with your system and that, if Toll Fraud occurs, it can result in substantial additional charges for your telecommunications services.

**Avaya Toll Fraud intervention**

If you suspect that you are being victimized by Toll Fraud and you need technical assistance or support, call Technical Service Center Toll Fraud Intervention Hotline at +1-800-643-2353 for the United States

and Canada. For additional support telephone numbers, see the Avaya Support website: http://support.avaya.com or such successor site as designated by Avaya. Suspected security vulnerabilities with Avaya products should be reported to Avaya by sending mail to: securityalerts@avaya.com.

**Trademarks**

The trademarks, logos and service marks ("Marks") displayed in this site, the Documentation, Hosted Service(s), and Product(s) provided by Avaya are the registered or unregistered Marks of Avaya, its affiliates, or other third parties. Users are not permitted to use such Marks without prior written consent from Avaya or such third party which may own the Mark. Nothing contained in this site, the Documentation, Hosted Service(s) and Product(s) should be construed as granting, by implication, estoppel, or otherwise, any license or right in and to the Marks without the express written permission of Avaya or the applicable third party.

Avaya is a registered trademark of Avaya Inc.

All non-Avaya trademarks are the property of their respective owners. Linux® is the registered trademark of Linus Torvalds in the U.S. and other countries.

**Downloading Documentation**

For the most current versions of Documentation, see the Avaya Support website: http://support.avaya.com, or such successor site as designated by Avaya.

**Contact Avaya Support**

See the Avaya Support website: http://support.avaya.com for Product or Hosted Service notices and articles, or to report a problem with your Avaya Product or Hosted Service. For a list of support telephone numbers and contact addresses, go to the Avaya Support website: http://support.avaya.com (or such successor site as designated by Avaya), scroll to the bottom of the page, and select Contact Avaya Support.

## Contents


**Chapter 1: Introduction** ... 7
- Purpose of this document ... 7
- Related resources ... 7
  - Documentation ... 7
  - Training ... 7
  - Avaya Mentor videos ... 7
  - Support ... 8

**Chapter 2: New in this release** ... 9
- Other changes ... 9

**Chapter 3: Avaya Command Line Interface fundamentals** ... 11
- User interface fundamentals ... 11
- ACLI concepts ... 11
- ACLI command modes ... 11
- Displaying an ACLI command list ... 13
- Displaying ACLI command options ... 13
- Obtaining a command name ... 14
- Displaying the ACLI command modes ... 14
- Displaying ACLI commands listed by mode ... 15
- Keystroke shortcuts ... 15
- Opening an ACLI session ... 16

**Chapter 4: Enterprise Device Manager fundamentals** ... 17
- Enterprise Device Manager concepts ... 17
- Supported Web browsers ... 18
- Memory requirements ... 19
- Online help ... 19
- Interface components ... 19
  - Switch summary view ... 19
  - Device Physical View ... 20
  - EDM window ... 21
  - Single port configuration for EDM ... 28
  - Multiple Port Configuration for EDM ... 31

**Chapter 5: ACLI procedures** ... 33
- Configuring EDM through ACLI ... 33
  - Enabling the Web server using ACLI ... 33
  - Disabling the Web server using ACLI ... 33
  - Displaying the Web server status using ACLI ... 34
- Configuring the path to the help files using ACLI ... 34

**Chapter 6: Enterprise Device Manager procedures** ... 37
- Starting EDM ... 37
- Using shortcut menus ... 37
  - Shortcut menus field descriptions ... 38
- Navigating around EDM ... 38
- Undocking tabs ... 39
- Docking tabs ... 39

Editing a dialog box.... 39
Inserting an entry in a dialog box.... 40
Deleting an entry from a dialog box.... 40
Editing an object using the shortcut menu.... 41
Editing file system elements.... 41
File System work area field descriptions.... 42
Configuring multiple interface ports using EDM - Example 1.... 42
Configuring multiple ports using EDM - Example 2.... 43
Graphing statistics.... 44
Getting EDM online help files for embedded EDM.... 44
Downloading help files.... 45
Configuring the help file path using EDM.... 45
**Chapter 7: Configuration files fundamentals.... 47**
Configuration files fundamentals.... 47
ACLI configuration files.... 47
Viewing current configuration using ACLI.... 47
Saving current configuration using ACLI.... 47
Saving current configuration to flash memory using ACLI.... 48
Restoring system configuration from TFTP using ACLI.... 48
Downloading a configuration file automatically using ACLI.... 49
Enterprise Device Manager configuration files.... 50
ASCII configuration file management using EDM.... 50
Binary configuration file management using EDM.... 53
Saving current configuration to flash memory manually using EDM.... 55
**Chapter 8: Supported standards and Request For Comments.... 57**
Supported standards and Request For Comments.... 57
Standards.... 57
RFCs and MIBs.... 58
**Appendix A: Ethernet Routing Switch 3500 Series hardware illustrations.... 61**

# Chapter 1: Introduction

## Purpose of this document

This document provides basic information about the user interfaces, information about the use and management of configuration files, and standards and Request For Comments supported on the switch.

## Related resources

### Documentation

For a list of the documentation for this product, see *Documentation Roadmap Reference for Avaya Ethernet Routing Switch 3500 Series*, NN47203-101.

### Training

Ongoing product training is available. For more information or to register, you can access the Web site at http://avaya-learning.com.

### Avaya Mentor videos

Avaya Mentor videos provide technical content on how to install, configure, and troubleshoot Avaya products.

#### About this task

Videos are available on the Avaya Support website, listed under the video document type, and on the Avaya-run channel on YouTube.

- To find videos on the Avaya Support website, go to http://support.avaya.com, select the product name, and select the *videos* checkbox to see a list of available videos.
- To find the Avaya Mentor videos on YouTube, go to http://www.youtube.com/AvayaMentor and perform one of the following actions:
  - Enter a key word or key words in the Search Channel to search for a specific product or topic.
  - Scroll down Playlists, and click the name of a topic to see the available list of videos posted on the site.

**Note:**

Videos are not available for all products.

## Support

Visit the Avaya Support website at http://support.avaya.com for the most up-to-date documentation, product notices, and knowledge articles. You can also search for release notes, downloads, and resolutions to issues. Use the online service request system to create a service request. Chat with live agents to get answers to questions, or request an agent to connect you to a support team if an issue requires additional expertise.

# Chapter 2: New in this release

The following hardware and software features are new in Avaya Ethernet Routing Switch (ERS) 3500 Series Release 5.2:

### ERS 3500 hardware

The following table lists and describes the new hardware supported in Release 5.2:

| Hardware | Description |
|---|---|
| **Modules** | |
| Avaya Ethernet Routing Switch 3549GTS | 48 10/100/1000 non-PoE and 2 shared SFP, plus 1 1/10 Gigabit SFP+ port, plus 2 rear dual mode/ stacking ports. |
| Avaya Ethernet Routing Switch 3549GTS-PWR+ | 48 10/100/1000 802.3at PoE+ and 2 shared SFP, plus 1 1/10 Gigabit SFP+ port, plus 2 rear dual mode/stacking ports. |

### ERS 3500 software features

The following software features are new for ERS 3500 Series Release 5.2:

- Avaya Energy Saver
- SLAMon enhancements
- Simple Loop Protection Protocol (SLPP) Guard
- Unified authentication
- Flash History
- Static LACP Key to Trunk ID binding

## Other changes

See the following sections for information about changes that are not feature-related.

### Document title change

In Release 5.2, the title of this document changed from Avaya Ethernet Routing Switch 3500 Series Fundamentals, NN47203-102 to *Fundamentals of Avaya Ethernet Routing Switch 3500 Series*, NN47203-102.

# Chapter 3: Avaya Command Line Interface fundamentals

## User interface fundamentals

This chapter provides basic information to help you understand the interfaces you can use to configure and manage an Avaya Ethernet Routing Switch. Available features depend on switch model and configuration.

## ACLI concepts

Avaya Command Line Interface (ACLI) is a text-based interface used for switch configuration and management. A common command line interface (CLI), ACLI follows the industry standard used for device management across Avaya products.

ACLI command modes occur in order of increasing privileges, each based on user logon permission level. Logon password determines logon permission level.

You can access ACLI directly through a console connection, remotely through a dial-up modem connection, or in-band through a Telnet session.

You can use ACLI interactively or use the **`configure network`** command to load and execute ACLI scripts, manually loading the script in the console menu or automatically loading the script at startup.

## ACLI command modes

This section describes the use and purpose of ACLI command modes.

ACLI command modes separate basic user tasks from control and management of the switch.

These command modes are available in ACLI:

- User Executive
- Privileged Executive
- Global Configuration
- Interface Configuration

Command mode access is determined by access permission levels and password protection.

If no password is set, you can open ACLI in User Executive mode and perform the **`enable`** command to move to the next level, Privileged Executive mode.

However, if you have read-only access, you cannot progress beyond User Executive mode, the default mode.

If you have read-write access you can progress from the default mode through all of the available modes.

User Executive mode is the default ACLI command mode and the initial access mode. Also known as exec mode, it is the most restrictive ACLI mode with only basic commands available; for example, show, ping and logout. User Executive commands are available from the other modes.

Privileged Executive mode is an unrestricted mode that can display all switch settings. If you are logged on with write access, you can access all configuration modes and commands that affect switch operation from Privileged Executive mode.

In Privileged Executive mode, also known as privExec mode, you can perform basic switch level management tasks; for example, downloading software images, setting passwords, and starting the switch. Privileged Executive commands are also available in Global and Interface configuration modes.

Global Configuration mode, also known as config mode, provides commands used to set and display general switch configurations such as IP address, Simple Network Management Protocol (SNMP) parameters, Telnet access, and Virtual Local Area Networks (VLAN).

Interface Configuration mode, also known as ifconfig mode, provides commands used to configure parameters for each port or VLAN such as speed, duplex mode, and rate limiting.

With sufficient permission, you can use the rules in the following table to move between the command modes.

| Command mode and sample prompt | Entrance commands | Exit commands |
|---|---|---|
| User Executive 3526T> | No entrance command, default mode | `exit`<br>or<br>`logout` |
| Privileged Executive 3526T# | `enable` | `exit` |



Comments? infodev@avaya.com

| Command mode and sample prompt | Entrance commands | Exit commands |
|---|---|---|
| | | or<br>`logout` |
| Global Configuration<br>3526T<config># | From Privileged Executive mode, enter<br>`configure` | To return to Privileged Executive mode, enter<br>`end`<br>or<br>`exit`<br>To exit ACLI completely, enter<br>`logout` |
| Interface Configuration<br>3526T<config-if># | From Global Configuration mode: To configure a port enter<br>`interface fastethernet <port number>`<br>To configure a VLAN enter<br>`interface vlan <vlan number>` | To return to Global Configuration mode, enter<br>`exit`<br>To return to Privileged Executive mode, enter<br>`end`<br>To exit ACLI completely, enter<br>`logout` |

# Displaying an ACLI command list

To view the commands available from the current ACLI command mode, you can display a list of all commands available for that mode from the prompt.

### Procedure

1. Access one of the ACLI command modes.
2. At the prompt, enter
   `?`

# Displaying ACLI command options

To focus command results, you can view command options for a specific ACLI command.

Use this procedure to display a list of options that are available for a command.

### Procedure

At the prompt, enter a portion of an ACLI command, followed by a space and a question mark (`?`).

## Obtaining a command name

If you are unsure about the correct name of a command, you can enter a partial command name and ACLI displays the closest match.

Use this procedure to obtain a correct command name.

### Procedure

1. At the prompt, enter a portion of the command name.
2. Press the **Tab** key.

### Obtaining a command name

1. At the prompt, enter `down`.
2. Press **Tab**.

The system displays `download`.

## Displaying the ACLI command modes

Use this procedure to display a list of the ACLI command modes with mode access commands.

### Procedure

At the prompt, enter:

```
help modes
```

**Note:**

The **`help modes`** command is available in all ACLI command modes.

# Displaying ACLI commands listed by mode

Use this procedure to display a list of the ACLI commands available with each of the command modes.

### Procedure

At the prompt, enter:

```
help commands
```

# Keystroke shortcuts

This section provides key combinations you can use to make ACLI navigation easier.

The following table describes the keystroke shortcuts.

| Key combination | Function |
|---|---|
| **Ctrl+A** | Start of line |
| **Ctrl+B** | Back 1 character |
| **Ctrl+C** | Abort command |
| **Ctrl+D** | Delete the character indicated by the cursor |
| **Ctrl+E** | End of line |
| **Ctrl+F** | Forward 1 character |
| **Ctrl+H** | Delete character left of cursor (**Backspace** key) |
| **Tab** | Command or parameter completion |
| **Ctrl+K** and **Ctrl+R** | Redisplay line |
| **Ctrl+N** or **Down arrow** | Next history command |
| **Ctrl+P** or **Up arrow** | Previous history command |
| **Ctrl+T** | Transpose characters |
| **Ctrl+U** | Delete entire line |
| **Ctrl+W** | Delete word to left of cursor |
| **Ctrl+X** | Delete all characters to left of cursor |
| **Ctrl+z** | Exit Global Configuration mode to Privileged EXEC mode |

| Key combination | Function |
|---|---|
| **?** | Context sensitive help |
| **Esc+C** and **Exc+U** | Capitalize character at cursor |
| **Esc+I** | Change character at cursor to lower case |
| **Esc+B** | Move back 1 word |
| **Esc+D** | Delete 1 word to the right |
| **Esc+F** | Move 1 word forward |

# Opening an ACLI session

Use this procedure to open an ACLI session for the switch.

### Before you begin

- Connect to the switch — either directly, with a console cable connected to the switch console port, or use Telnet.
- To connect to the switch remotely, use Telnet, enable remote access, and ensure that the switch IP address is valid.
- Use a terminal or a PC with a terminal emulator as an ACLI command station.
- If you use a console cable and console port, ensure that the terminal emulation program conforms to settings in the following table.

| Property | Value |
|---|---|
| Baud Rate | 9600 bps |
| Data Bits | 8 |
| Stop Bits | 1 |
| Parity | None |
| Flow Control | None |
| Terminal Protocol | VT100 and VT100/ANSI |

### Procedure

1. Connect to the switch.
2. Enter the password, if applicable.
3. At ACLI Banner Screen, enter `CTRL+Y`.

# Chapter 4: Enterprise Device Manager fundamentals

## Enterprise Device Manager concepts

This section provides information to start and use Enterprise Device Manager (EDM) to monitor, manage, and configure Ethernet Routing Switch 3500 Series switches.

If you want to manage the switch from a centralized location, using Configuration and Orchestration Manager (COM) 2.0 and higher, Avaya offers optional, product-specific EDM plug-ins for COM that include other features such as centralized syslog, trap viewer, troubleshooting and diagnostic tools. For more information, or to purchase plug-ins, go to http://www.avaya.com/support.

The following table compares EDM functions in the embedded version to COM plug-in version.

**Table 1: EDM functions: embedded version compared to COM plug-in version**

| EDM functions | Embedded version | Plug-in version |
|---|---|---|
| 100% device configuration: device view, device-specific configuration | Yes | Yes |
| Stackable Device Web User Interface features | Yes | No |
| Centralized off-box multi-user element management:<br>• user and device credential manager<br>• user preference<br>• SSO–based user access control | No | Yes |

| EDM functions | Embedded version | Plug-in version |
|---|---|---|
| • user-based Device Access Control (read only and read-write)<br>• authentication through third party (RADIUS, Microsoft AD, Sun AM) | | |
| Centralized EM plug-in management (downloadable install and uninstall, upgrade, patch, and inventory view) | No | Yes |
| User activity log and audit trail | No | Yes |
| Device performance monitoring and polling | Limited | High performance and low latency |
| Device-specific single device wizards and template | No | Yes |
| Centralized syslog and trap viewer | No | Yes |
| Troubleshooting and diagnostic tools (ping, CLI Manager, path-trace) | | |

EDM is an embedded application that you can use for single device element management and configuration through a standard Web browser. Because EDM is embedded into Ethernet Routing Switch software, and the switch operates as a Web server, you do not require additional client software.

# Supported Web browsers

The following is a list of Internet Web browsers supported by EDM:

- Microsoft Internet Explorer versions 7.0 and 8.0 and higher
- Mozilla Firefox version 3.x and higher

# Memory requirements

If you install Configuration and Orchestration Manager on a PC to manage your switch, the PC must have at least 500 MB of free disk space.

There are no memory requirements to use EDM through a Web browser.

# Online help

Online help is context-sensitive and appears in a separate window in the Web browser.

To obtain help for the current topic, click the **help** button on the toolbar in the work area.

If you are not using EDM through COM, you need to download the help file to a TFTP server and configure the EDM Help file path.

# Interface components

This section describes Enterprise Device Manager interface components.

The Enterprise Device Manager window includes the following parts:

- Navigation tree toolbar
- Switch Summary View
- Device Physical View
- EDM window
- Navigation tree
- Menu bar
- Tool bar
- Work area

## Switch summary view

The EDM initial view displays a switch summary view in the work area.

The Switch Summary tab displays basic switch information. This information-only display derives from the configuration tab Edit, Chassis, Chassis.

Following is a list of the fields on the Switch Summary tab:

- hardware model
- hardware version
- firmware version
- software version
- system uptime
- system object identifier
- system contact
- system name
- system location

A Stack Information panel appears at the bottom of the switch summary view work area that provides a description of your switch or the units in your switch stack.

This information includes the following:

- Unit number (for stacks) – also lists which unit is the base unit in a stack
- Switch type
- Description
- Running software version

## Device Physical View

When you access EDM, the first panel in the work area displays a switch summary view. The tab behind the summary view is a real-time physical view of the front panel of a device or stack called the Device Physical View.

Objects in the Device Physical View are

- a stand-alone switch, called a unit
- a switch stack, called a chassis
- a port

From the Device Physical View you can

- determine the hardware operating status
- select a switch or a port to perform management tasks on specific objects or view fault, configuration, and performance information for specific objects

To select an object, click the object. The system outlines the object in yellow, indicating that the object selected.

The conventions on the device view are similar to the actual switch appearance except that LEDs in Device Physical View do not blink. The LEDs and the ports are color-coded to reflect hardware status. Green indicates the port is up and running; red indicates that the port is disabled.

From the menu bar you can click the Device Physical View tab to open the Device Physical View any time during a session.

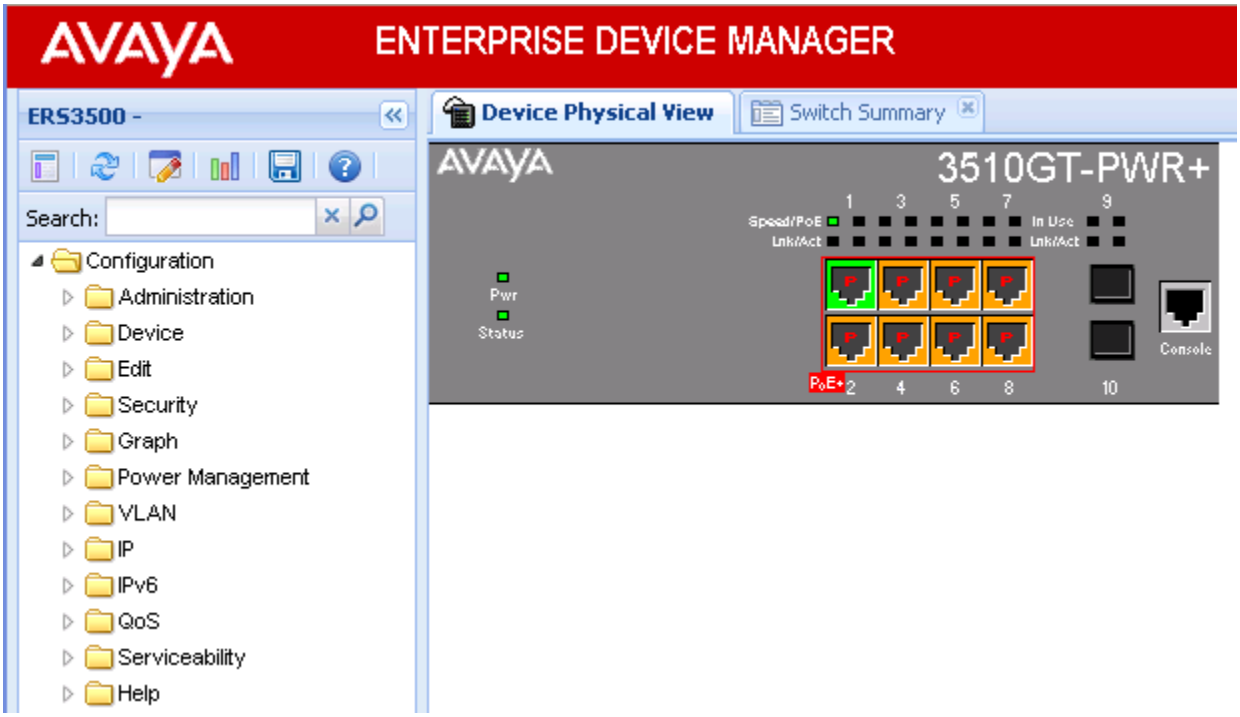


**Figure 1: Device Physical View**

## EDM window

The EDM window contains the following parts:

- 1 navigation tree—the navigation pane on the left side of the window that displays available command folders in a tree format
- 2 menu bar—the area at the top of the window that displays primary and secondary tabs that you accessed during the session; the tabs remain available until you close them

- 3 toolbar—the area just below the menu bar that provides quick access to the most common operational commands such as **Apply**, **Refresh**, and **Help**
- 4 work area—the main area on the right side of the window that displays the dialog boxes where you view or configure switch parameters

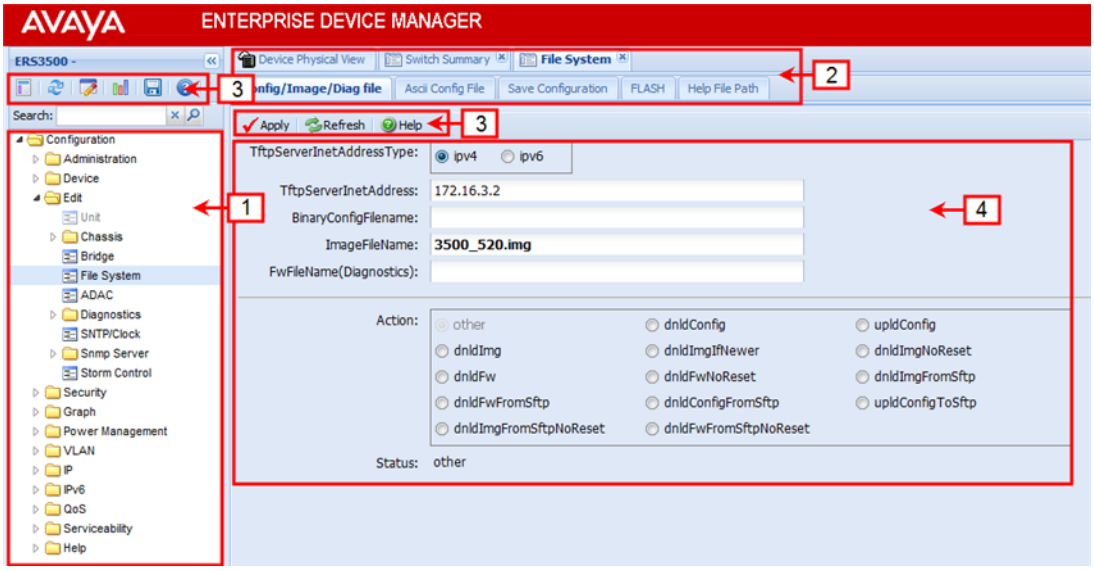


**Figure 2: EDM window**

## Navigation tree

The navigation tree displays available command topics as folders in a tree, as described in the table below.

**Table 2: Folders and subfolders in the navigation tree**

| Folder | Description |
|---|---|
| Administration | Use the selections in the Administration folder to perform the following functions:<br>• Quick Start — sets up IP/Community/VLAN<br>• Remote Access — enables or disables Telnet, SNMP, Web Page, and SSH<br>• MIB Web Page — performs a MIB Walk |
| Device | Rediscover Device — Use the Rediscover Device selection to refresh the session.<br>**Caution:**<br>All existing tabs are lost. |

| Folder | Description |
|---|---|
| Edit | Opens edit dialog boxes for the objects selected in the navigation tree. Use the selections in the Edit folder to view or change parameters for the currently-selected object.<br>• Unit<br>• Chassis: Chassis, Switch/Stack, Ports, and Environmental<br>• Bridge<br>• File System<br>• ADAC<br>• Diagnostics: Port Mirrors, Topology, System Log. 802.1AB: LLDP, Port MED, Avaya<br>• SNTP/Clock<br>• Snmp Server: MIB View, User, Community, Host, Notification Control<br>• Storm Control |
| Security | Use the selections in the Security folder to view or change security settings.<br>• MAC Security<br>• DHCP Snooping<br>• Dynamic ARP Inspection (DAI)<br>• IP Source Guard (IPSG)<br>• 802.1X/EAP<br>• Web/Telnet/Console<br>• SSH/SSL<br>• RADIUS<br>• TACACS+ |
| Graph | Use the selections in the Graph folder to view statistics and produce graphs of the statistics on the following tabs:<br>• Chassis<br>• Port — to view or graph statistics for a port, first select a port on the Device Physical View. |
| Power Management | The Power Management tab is available only for switches equipped with Power over Ethernet (PoE). Use this selection to view and configure PoE settings. |

| Folder | Description |
|---|---|
| VLAN | Use the selections in the VLAN folder to configure or view information about the following:<br>• VLANs<br>• Spanning Tree: Globals, STG, RSTP, MSTP<br>• MLT/LACP<br>• SLPP Guard |
| IP | Use the selections in the IP folder to set up IP functions on tabs in the following sub-folders:<br>• IP<br>• TCP/UDP<br>• IGMP<br>• DHCP Relay<br>• DHCP Server<br>• UDP Forwarding |
| IPv6 | Use the selections in the IPv6 folder to set up IPv6 routing functions on tabs in the following sub-folders:<br>• IPv6<br>• TCP/UDP |
| QoS | Use the selections in the QoS folder to configure quality of service and set up QoS policies and filters using tabs in the following sub-folders:<br>• QoS Devices<br>• QoS Rules<br>• QoS<br>• QoS Agent |
| Serviceability | Use the selections in the Serviceability folder to navigate to the following sub-folders:<br>• RMon for remote monitoring and configuration of<br>- Alarms<br>- Control<br>• SLA Mon for Service Level Agreement monitoring |

To open a folder or sub-folder, you can click the arrowhead to the left of the folder or double-click the folder to display the available commands tabs.

To close a folder, click the arrowhead once.

To access a command tab, double-click the selection in the navigation tree.

## Navigation tree toolbar

You can use the toolbar above the navigation tree to perform common functions more easily.

Toolbar:

**Figure 3: Toolbar**

Following is a description of the toolbar button functions:

| Button | Description |
|---|---|
| | Switch Summary – you can use the Switch Summary toolbar button to open or reopen the switch summary tab |
| | Refresh Status – in addition to the existing refresh methods you can use the Refresh Status toolbar button to refresh the device status |
| | Edit Selected – in addition to the existing edit methods, and depending on which object you select on the Device Physical View, you can use this toolbar button to open Edit > Chassis, Edit > Unit, or Edit > Ports tabs. If you do not select an object from the Device Physical View and you click the Edit Select toolbar button, the Edit > Chassis tab opens. |
| | Graph Selected – depending on which object you select on the Device Physical View, you can use this toolbar button to open Graph > Chassis or Graph > Port tabs. If you do not make a selection on the Device Physical View, or if you select Unit, the Graph > Chassis tab opens. |
| | Save Config — this button allows you to save the current configuration. A window appears asking if you want to save the configuration: click OK to save the configuration or click Cancel to cancel the Save operation. |
| | Help Setup Guide – this button connects you to the help setup guide for embedded EDM and it replaces the link that appeared on the top right of work panes. |

Under the toolbar is the Search function window. You can use the Search function window to find a specific sub-folder or selection in the navigation tree.

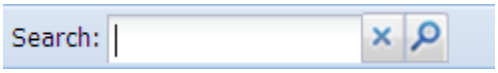


**Figure 4: Search function window**

Enter the sub-folder or selection you are looking in the Search window and click the magnifying glass to perform the search. The navigation tree displays the sub-folder that best matches your search criteria.

## Menu bar

The menu bar appears above the work area and consists of two rows of tabs.

The top row displays tabs that were accessed from the navigation tree during the active session. The tabs in this row, called primary tabs, are docked and available to reopen on demand. The docked tabs appear in the sequence that you accessed them.

When you click a primary tab from the menu bar, the associated secondary tabs appear in the second row and the default dialog box appears in the work area. Click any secondary tab to display its associated dialog box.

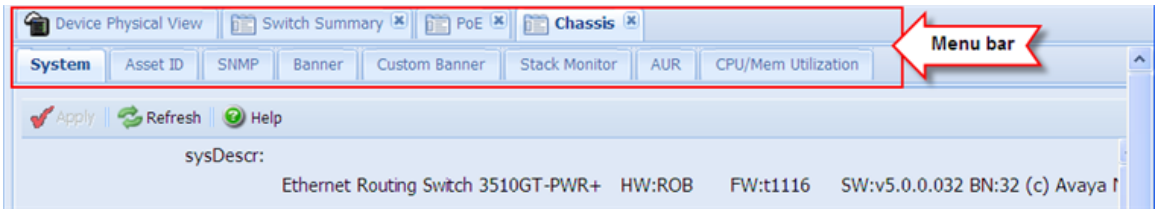


**Figure 5: Menu bar**

If you want to open a dialog without displacing the current open dialog, you can go to the tab on the menu bar and undock the tab by using your mouse to drag and drop it into the work area. You can drag the dialog box to any location on the screen and you can toggle between the open dialog boxes to compare information and make changes. When you no longer need the undocked tab, you can use the three buttons on the upper right side of the tab to temporarily shrink it, re-dock it, or close it.

In both rows of the menu bar, arrows can appear on the left and right sides when the number of open tabs exceeds the available space. You can use the arrows to scroll to a tab, or you can select the tab from the navigation tree.

To reduce the number of open tabs, you can click the X button on the top right of a tab to close it.

## Tool bar

The tool bar, located below the menu bar, contains buttons that provide quick access to commonly used operational commands. Depending on the tab selected, different buttons can appear.

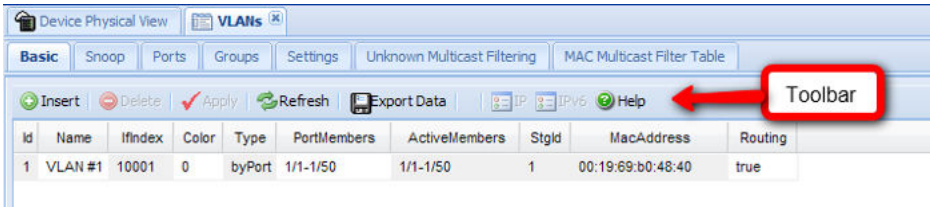


**Figure 6: Tool Bar**

The following table describes common tool bar buttons.

**Table 3: Common tool bar buttons**

| Button | Name | Description |
|---|---|---|
| | Apply | Executes parameter changes |
| | Refresh | Refreshes screen data |
| | Help | Displays context-sensitive online help for the current dialog box |
| | Insert | Opens an insert dialog box<br>Submits the entry from the insert dialog box<br>The insert buttons appear only on panes where you can insert entries. |
| | Delete | Removes a selected entry |
| | Cancel | Cancels an operation |

## Work area

The work area, on the right side of the EDM page, displays the switch Device Physical View and dialog boxes related to the menu selections in the navigation tree. You can use the work area to view and configure switch parameters from the dialog boxes that appear in the work area.

See the following figure for an example of the work area for the File System, Config/Image/Diag file dialog.

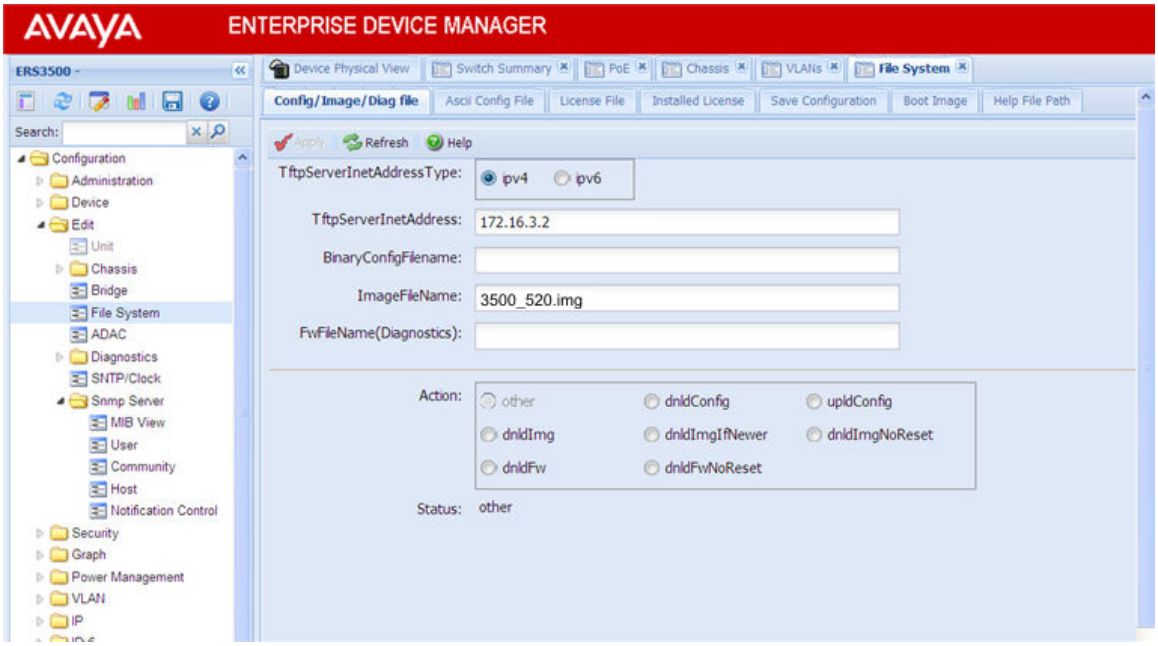


**Figure 7: EDM work area**

## Single port configuration for EDM

You can apply configuration changes to single ports by using one of the following methods:

- From the Device Physical View, you can right-click a port and select Edit from the drop-down menu, then click the appropriate tab.

  The following figure displays the drop-down menu for the selected port in the Device Physical View.

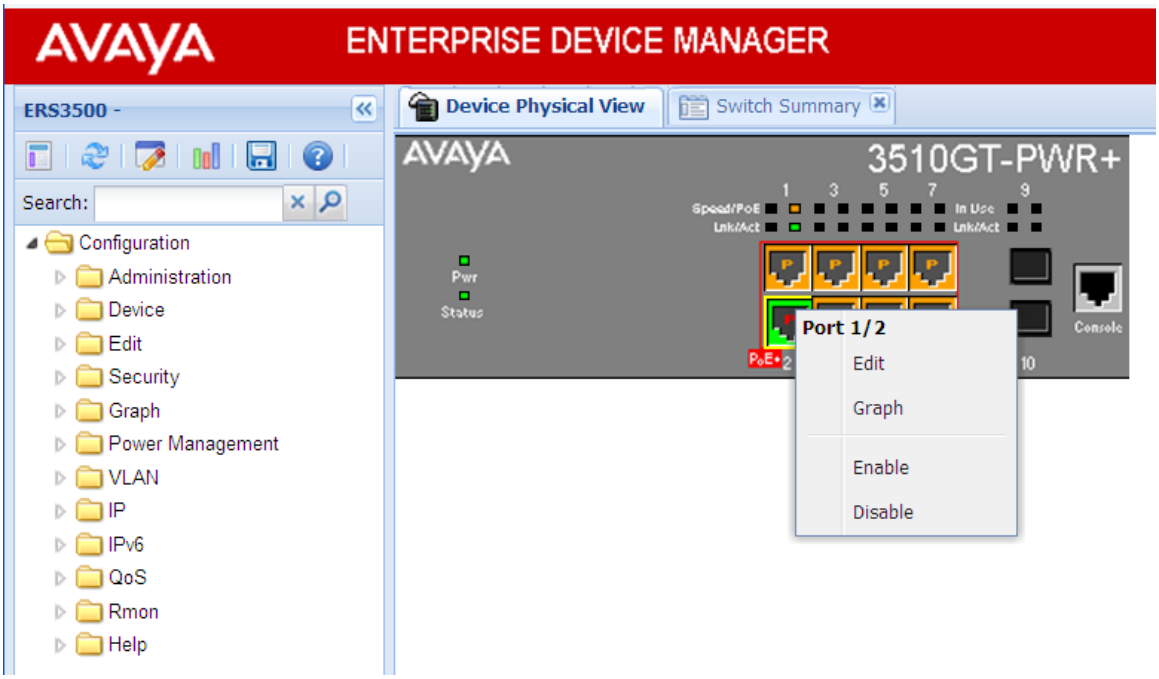


**Figure 8: Device Physical View - port edit**

The following figure displays the port edit work area with the VLAN tab selected.

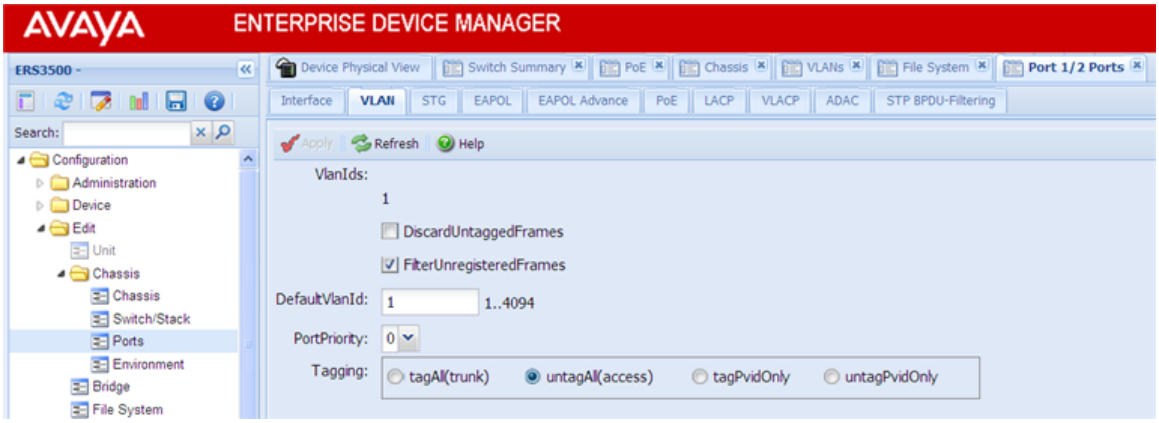


**Figure 9: Port edit -VLAN tab**

- From the Navigation tree you can select any tab from the Edit, Chassis, Ports work flow and double-click a cell under an editable parameter column heading in the appropriate port row of the table.

  The following figure displays the Edit, Chassis, Ports work area with the Interface tab selected.

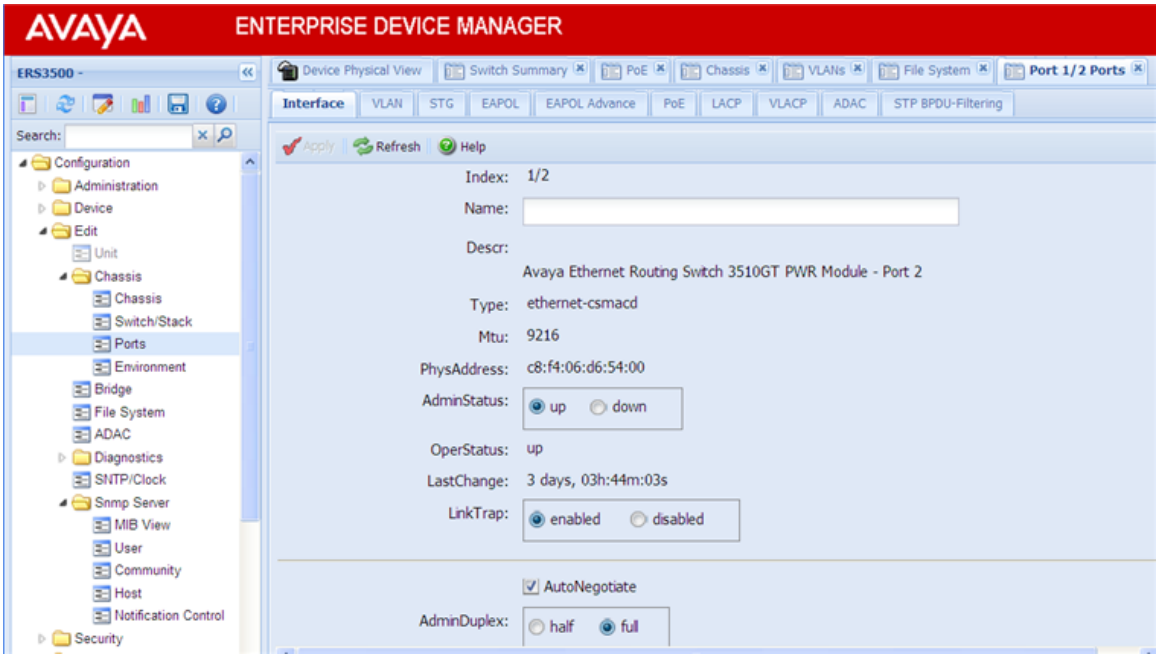


**Figure 10: Edit, Chassis, Ports - Interface tab**

- From the Navigation tree you can select a port-related tab from a specific, applicable feature work area (for example, VLAN, VLANs, Ports), and double-click a cell under an editable parameter column heading in the appropriate port row of the table.

  The following figure displays the VLAN, VLANs, Ports tab work area.

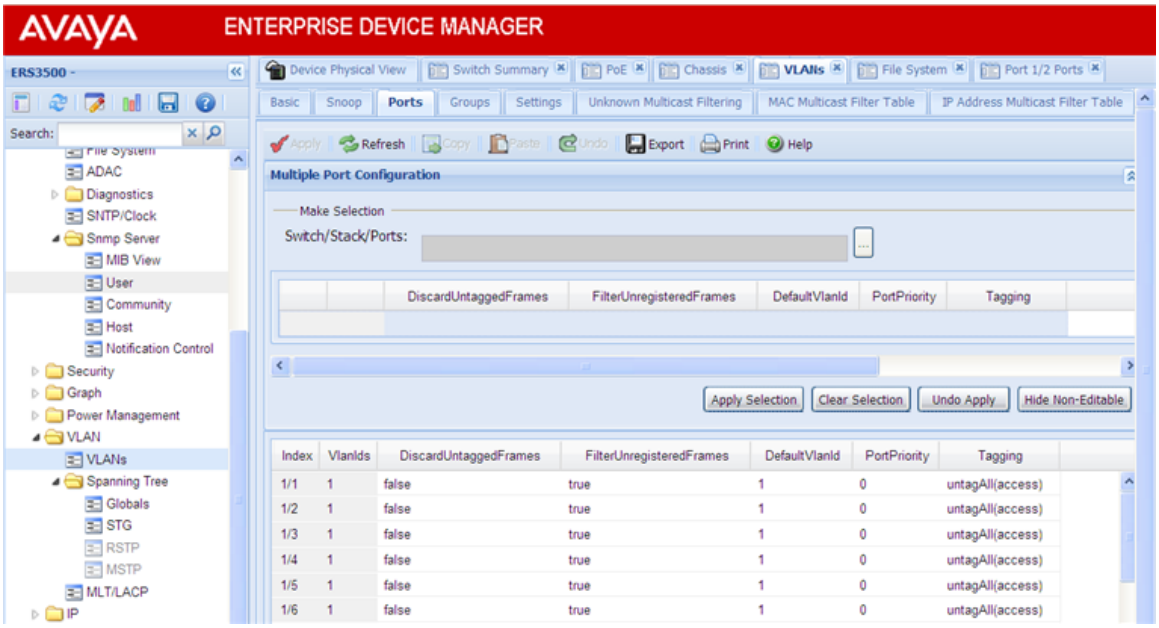


**Figure 11: VLAN, VLANs - Ports tab**

## Multiple Port Configuration for EDM

When you need to apply the same configuration changes to more than one port, you can use the Multiple Port Configuration function available on all tabs in the Edit, Chassis, Ports work flow, or on port-related tabs for specific, applicable feature work areas (for example, VLAN, VLANs, Ports).

The following sections use the Edit, Chassis, Ports, Interface tab work area to describe the available Multiple Port Configuration functions.

In the work area for any of the Edit, Chassis, Ports tabs, the following two panes appear in the default view:

- Multiple Port Configuration pane—provides port selection for one port, several ports, or all ports, and configurable port parameters
- Tab work pane—displays existing configuration information for the feature and configurable cells for individual ports

With Multiple Port Configuration you can perform the following:

- Hide non-editable fields from the multiple configuration pane so that you choose to view only those fields that can be configured.
- Select an individual port or a group of ports from the Port Editor.
- Select all ports from the Port Editor.
- Double-click any or all of the editable fields to change the configuration parameter.
- Clear your selections.
- Apply your selections.
- Undo the application of your selections.

You can expand or collapse the Multiple Port Configuration pane by clicking the Multiple Port Configuration task bar. The Multiple Port Configuration pane is expanded by default.

The following figure displays the tabs available in the Edit, Chassis, Ports work flow, with the Interface tab selected and the Multiple Port Configuration pane expanded.

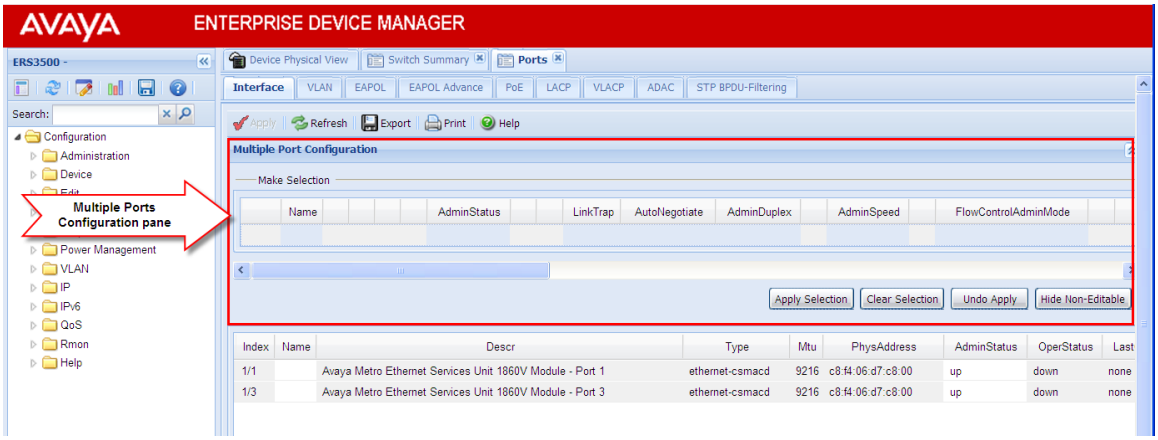


**Figure 12: Interface tab — Multiple Port Configuration pane expanded**

The following figure displays the Edit, Chassis, Ports, Interface tab with the Multiple Port Configuration pane collapsed.

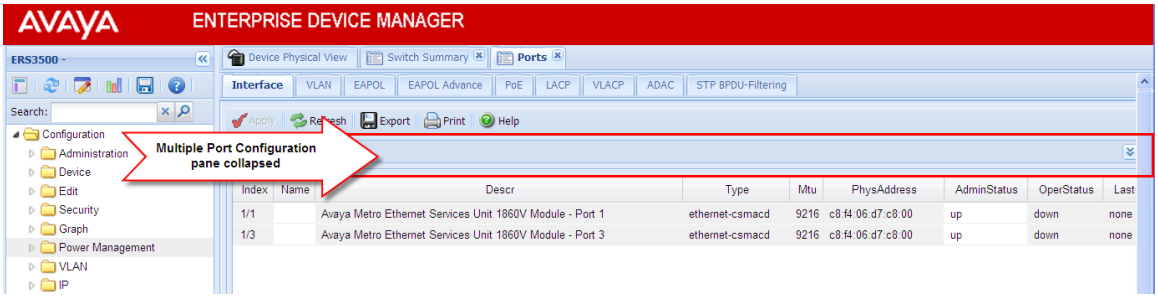


**Figure 13: Interface tab — Multiple Port Configuration pane collapsed**

Changes you make to a port configuration using Multiple Port Configuration are applied to the switch configuration only after you click **Apply** on the work area toolbar.

The following figure displays the location of the **Apply** button on the work area toolbar.

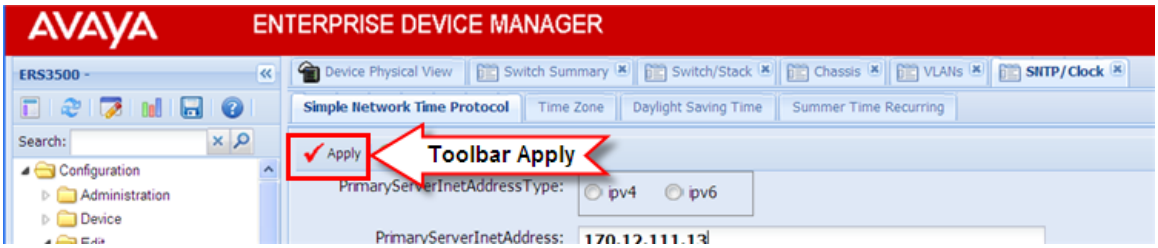


**Figure 14: Toolbar Apply button**

# Chapter 5: ACLI procedures

## Configuring EDM through ACLI

This section describes how to enable and configure the Enterprise Device Manager (EDM) using ACLI.

### Enabling the Web server using ACLI

The Web server is enabled by default. If you have assigned an IP address to the switch you can access EDM.

If you have disabled the Web server, use this procedure to enable and manage the Web server using ACLI. After you enable the Web server you can start EDM. For more information about the Web server, see *Avaya Ethernet Routing Switch 3500 Configuration — Security (NN47203–504).*

**Procedure**

1. Log on to the Global Configuration mode in ACLI.
2. At the command prompt, enter the following command:
   ```
   web-server enable
   ```

### Disabling the Web server using ACLI

Use this procedure to disable the Web server using ACLI. After you disable the Web server, you cannot start EDM.

**Before you begin**

- Open an ACLI session.

**Procedure**

1. Log on to the Global Configuration mode in ACLI.

2. At the command prompt, enter the following command:
   `no web-server enable`

## Displaying the Web server status using ACLI

Use the following procedure to display the status of the Web server using ACLI.

### Procedure

1. Log on to the Global Configuration mode in ACLI.
2. At the command prompt, enter the following command:
   `show web-server`

## Configuring the path to the help files using ACLI

Use this procedure to configure the path to the help files.

### Procedure

1. Log on to the Global Configuration mode in ACLI.
2. At the command prompt, enter the following command:
   `edm help-file-path <path name> <tftp address> <filename>`

### Example

Following is an example of an ACLI EDM help file path:`edm help-file-path ERS3500_51_Help tftp address 10.100.100.15`

In the preceding example, ERS3500_51_Help is a folder that contains help files and the folder is located on a TFTP server at the 10.100.100.15 address.

## Variable definitions

The following table describes the parameters for the **`help-file-path`** command.

| Variable | Value |
|---|---|
| path name | Specifies the path name you created for EDM files. The path name is stored in NVRAM. |
| TFTP address | Specifies EDM TFTP server IP address. Use this address only for EDM help files. If you do not specify a TFTP server address, the system uses the address specified most recently.<br>**Warning:**<br>The TFTP server address is stored in NVRAM, therefore each time the system returns to the default configuration, you must reconfigure the path to EDM online help. |

# Chapter 6: Enterprise Device Manager procedures

## Starting EDM

To configure and maintain your switch through a Web-based graphical user interface, start EDM.

### Before you begin

- Ensure that the switch is running.
- Note the switch IP address.
- Ensure that the Web server is enabled.
- Note the user name.
- Note the password.
- Open one of the supported Web browsers.

### Procedure

1. In a supported Web browser, enter the IP address of the switch using one of the following formats:
   - http://<IP Address>
   - https://<IP Address>
2. Enter the user name.
3. Enter the password.
4. Click **Log On.**

## Using shortcut menus

In the EDM Device Physical View you can use shortcut menus to edit objects and apply changes.

### Procedure

1. In the Device Physical View, select an object.
2. Right-click the object.
3. Select a function from the list.

## Shortcut menus field descriptions

| Name | Description |
|---|---|
| **Unit** | |
| **Edit** | Display the Edit unit dialog box and tabs |
| **Refresh** | Refreshes switch status |
| **Refresh Port Tooltips** | Refreshes the port tooltip data. Port tooltip data contains: Slot/Port, PortName, and PortOperSpeed |
| **Port** | |
| **Edit** | Displays the Edit port dialog box and tabs |
| **Graph** | Displays the graph port dialog box and tabs |
| **Enable** | Enables the port administratively |
| **Disable** | Shuts down the port administratively |

# Navigating around EDM

Use the following procedure to navigate around EDM.

### Procedure

1. In the navigation pane, click the arrowhead to the left of a folder to display the sub-level folders in the tree.
2. If there is a sub-folder, double-click the folder or click the arrowhead beside it, to open the sub-folder.
3. The primary tabs appear under the folders and sub-folders. Click a tab to open it in the work area.

# Undocking tabs

To improve certain types of configuration, you can view more than one tab at a time. To view more than one tab, you use the undock function to activate a previously-opened tab from the menu bar.

**Important:**

When you undock a tab to make changes, then return to another open tab, in order to see the effects of the changes, you must click the **Refresh** button on the tool bar.

### Procedure

1. From the menu bar, drag and drop the tab you want to open.
2. To reposition the tab in the work area, click and drag the title bar of the tab.

# Docking tabs

You can re-dock an undocked tab using one of the following methods.

### Procedure

To re-dock a tab, do one of the following:

- On the undocked tab, click the dock-back button (the middle button on the top right of the panel)
- On the undocked tab, click the collapse button (left button on the top right of the panel) to temporarily minimize the panel.

# Editing a dialog box

Use this procedure to edit a dialog box.

### Procedure

1. In the work area, double-click the field you want to edit.

2. Select a value from the list of predetermined values or enter the value for a field without preset values.

   **Important:**

   Enter an IP address in decimal format: <xxx> <xxx> <xxx> <xxx>.

   Enter a MAC address in hexadecimal format: xx:xx:xx:xx:xx:xx.

   Time is a value based on the delta from the switch boot-up time.

3. Click **Apply**.

# Inserting an entry in a dialog box

Use this procedure to insert an entry in a dialog box.

**Procedure**

1. On the tool bar, click **Insert**.
2. Enter changes in the Insert dialog box.
3. Click **Insert** to submit the entry and return to the active tab in the work area.
4. On the toolbar, click **Apply** to commit the change to the configuration. The system refreshes the view and errors display in a browser popup.

# Deleting an entry from a dialog box

Use this procedure to delete an entry from a dialog box.

**Procedure**

1. Highlight the entry.
2. Click **Delete**.

# Editing an object using the shortcut menu

You can edit objects in the Device Physical View from the navigation tree or the shortcut menu. Use this procedure to edit an object using the shortcut menu.

### About this task

Changes are not applied to the running configuration until you click **Apply**.

### Procedure

1. On the Device Physical View, you can
   - right click an object
   - press Ctrl+click to select several objects, then right click
   - click and drag to select a group of objects, then right click
   - click an entire device, then right click
2. From the list, click **Edit**.
3. Edit the applicable tab in the work area.
4. Click **Apply**.

# Editing file system elements

Use this procedure to edit file system elements.

### Procedure

1. Click the **Edit** arrowhead to open the Edit menu.
2. Double-click **File System** to open the File System tab in the work area.

## File System work area field descriptions

The following table describes the tabs in the File System work area.

| Tab | Description |
|---|---|
| **Config/Image/Diag file** | Use this tab to view information about and acquire image, configuration, and firmware files. |
| **Ascii Config File** | Use this tab to acquire ASCII configuration files. |
| **Save Configuration** | Use this tab to save the current configuration manually or automatically. |

## Configuring multiple interface ports using EDM - Example 1

Use this procedure as an example for configuring multiple interface ports using the Multiple Port Configuration function and the **Edit, Chassis, Ports, Interface** work flow.

### Before you begin

- Select ports on the Device Physical View.

### Procedure

1. In the navigation tree, double-click **Edit**.
2. In the Edit tree, double-click **Chassis**.
3. In the Chassis tree, click **Ports**.
4. Click the **Interface** tab.
5. To change the configuration of the selected ports, in the Multiple Port Configuration pane, double-click the cell beneath the column heading that represents the parameter you want to change and do one of the following:
   - Select a value from a drop-down list.
   - Type a value in the cell.
6. In the Make Selection pane, click **Apply Selection**. The changes appear in the table.

7. On the Interface tab toolbar, click **Apply** to apply the changes to the switch configuration.

# Configuring multiple ports using EDM - Example 2

Use this procedure to configure multiple ports using the Multiple Port Configuration functions and the **Security, MAC Security, AutoLearn** workflow. When you use this workflow you can select ports directly from the Multiple Port Configuration pane on the **Configuration** tab.

### Procedure

1. In the navigation tree, double-click **Security**.
2. In the Security tree, double-click **MAC Security**.
3. Click the **AutoLearn** tab.
4. In the work area, in the Make Selection section of the Multiple Port Configuration pane, click the Switch/Stack/Ports ellipsis (...) to open the Port Editor dialog.
5. In the Port Editor window, click the ports you want to configure.

   **Note:**

   If you want to configure all ports, click **All**.
6. Click **OK** to return to the Make Selection pane.

   The ports you selected appear in the Switch/Stack/Ports box.
7. To change the configuration of the selected ports, in the Multiple Port Configuration pane, double-click the cell beneath the column heading that represents the parameter you want to change and do one of the following:
   - Select a value from a drop-down list.
   - Type a value in the cell.
8. In the Make Selection pane, click **Apply Selection**.

   The changes appear in the table.
9. On the **AutoLearn** tab toolbar, click **Apply** to apply the changes to the configuration.

# Graphing statistics

You can graph statistics for an entire device, a group of ports, or a single port.

### Before you begin

On a Device Physical View select one of the following:

- a port
- a group of ports
- a device

### Procedure

1. In the navigation tree, double-click **Graph**.
2. In the Graph tree, select one of the following:
   - **Chassis**
   - **Port**
3. In the work area, select a tab.
4. On the tab, select information to graph. To export the information to another application, on the task bar click **Export Data**.
5. To create the graph, on the task bar, click a graph type.

# Getting EDM online help files for embedded EDM

Because help files are not included with the embedded EDM software files on the switch, you need to download the help files to a TFTP destination and use ACLI to configure a path from your switch to the help files.

If you are using COM to manage your switch, help resides with COM and you do not need to use these procedures.

## Downloading help files

Use this procedure to download help files.

### Before you begin

- An available TFTP server — ensure that the TFTP path differs from the path you use to download switch software

**Caution:**

Do not install EDM help files on Flash.

### Procedure

1. To obtain EDM help files for the embedded element manager, do one of the following;
   - Go to the Avaya Web site http://support.avaya.com/css/appmanager/public/support and locate the help file for the appropriate product.
   - Select the help file from the software CD ROM contained in the Base Software License Kit.
2. Download the help file to a TFTP server.

## Configuring the help file path using EDM

Use this procedure to configure the path to the help files.

### Procedure

1. In the navigation tree, double-click **Edit** or click the Edit arrowhead to open the Edit menu.
2. Click **File System** to open the File System work area.
3. In the work area, click the **Help File Path** tab.
4. In the Path dialog box, enter the path to the help file storage location.

### Example

```
tftp://A.B.C.D/file_name
```

# Chapter 7: Configuration files fundamentals

## Configuration files fundamentals

This chapter provides fundamental information about working with configuration files.

Configuration files are ASCII text files that allow the administrator to change switch configuration quickly.

Procedures to manage binary configuration files are included in the Enterprise Device Manager section.

## ACLI configuration files

You can use ACLI to display, store, and retrieve configuration files, and to save the current configuration.

### Viewing current configuration using ACLI

Use this procedure to view the current configuration.

**Procedure**

1. Log on to the Privileged EXEC mode in ACLI.
2. At the command prompt, enter the following command:
   `show running-config [verbose] [module]`

### Saving current configuration using ACLI

Use this procedure to save the current configuration to a specific TFTP server.

### Procedure

1. Log on to the Privileged EXEC mode in ACLI.
2. At the command prompt, enter the following command:

```
copy running-config tftp [address (<A.B.C.D> | <WORD>)]
[filename <WORD>]
```

## Variable definitions

The following table describes the parameters for the **`copy running-config`** command.

| Variable | Value |
|---|---|
| address<*A.B.C.D*> | Specifies the address of the TFTP server.<br>• A.B.C.D — specifies the IP address |
| filename<*name*> | Specifies the configuration file name. |

# Saving current configuration to flash memory using ACLI

Use this procedure to save the current configuration to flash memory. Note that the system automatically issues the **`copy config nvram`** command periodically.

### Procedure

1. Log on to the Privileged EXEC mode in ACLI.
2. At the command prompt, enter the following command:

```
copy config nvram
```

**Note:**

The current configuration can also be saved to Non-Volatile RAM (NVRAM) using the **`write memory`** command or the **`save config`** command. Both of these commands are also issued from Privileged EXEC command mode.

# Restoring system configuration from TFTP using ACLI

Use this procedure to restore the system configuration from TFTP.

### Procedure

1. Log on to the Privileged EXEC mode in ACLI.
2. At the command prompt, enter the following command:
   ```
   copy tftp config address <A.B.C.D> filename <name>
   ```

## Variable definitions

The following table describes the parameters for the **`copy tftp config`** command.

| Variable | Value |
|---|---|
| address <*A.B.C.D*> | Specifies the address of the TFTP server.<br>• A.B.C.D — specifies the IP address |
| filename <*name*> | Specifies the configuration file name. |

# Downloading a configuration file automatically using ACLI

Use this procedure to configure a switch to automatically load a configuration file.

### Procedure

1. Log on to the Privileged EXEC mode in ACLI.
2. At the command prompt, enter the following command:
   ```
   configure network load-on-boot {disable | use-bootp | use-
   config} address <A.B.C.D> filename <name>
   ```

## Variable definitions

The following table describes the parameters for the **`configure network load-on-boot`** command.

| Variable | Value |
|---|---|
| load-on-boot *{disable* \| *use-bootp* \| *use-config}* | Specifies the setting to automatically load a configuration file when the system starts<br>• disable — disables the automatic loading of the configuration file<br>• use-bootp — specifies loading the ASCII configuration file at startup and using BootP to obtain values for the TFTP address and file name<br>• use-config — specifies loading the ASCII configuration file at startup and using the locally configured values for the TFTP address and file name<br>If you omit the variables, the system immediately downloads and runs the ASCII configuration file. |
| address <*A.B.C.D*> | Specifies the address of the TFTP server.<br>• A.B.C.D — specifies the IP address |
| filename <*name*> | Specifies the configuration file name. |

# Enterprise Device Manager configuration files

You can use Enterprise Device Manager procedures in the following sections to:

- store the current switch ASCII configuration on a TFTP server
- retrieve an ASCII configuration file from a TFTP server to apply to a switch
- store a binary configuration file from a TFTP server
- retrieve a binary configuration file from a TFTP server
- manually save the current configuration to flash memory
- designate a configuration to download automatically at switch startup

## ASCII configuration file management using EDM

Use the following procedure to manage ASCII configuration files.

### Storing current ASCII configuration on a TFTP server using EDM

Use this procedure to store the current ASCII configuration on a TFTP server.

### Procedure

1. In the navigation tree, double-click **Edit** to open the Edit tree.
2. Double-click **File System**.
3. Click the **Ascii Config File** tab.
4. In **TftpServerInetAddressType** choose the TFTP server internet address type.
5. In TFTPServerInetAddress, enter the TFTP server IP address.
6. In AsciiConfigFilename, enter the configuration file name.
7. In AsciiConfigManualUpload, choose **uploadNow**.
8. On the toolbar, click **Apply**.

### ASCII Config File field descriptions

The following table describes the fields on the Ascii Config File tab.

| Name | Description |
|---|---|
| **TftpServerInetAddressType** | Specifies the IP version of the TFTP server address. |
| **TftpServerInetAddress** | Specifies the TFTP server IP address. |
| **AsciiConfigFilename** | Specifies the name of the ASCII configuration file. |
| **AsciiConfigManualUpload** | uploadNow — Initiates manual configuration upload |

## Downloading an ASCII configuration from a TFTP server using EDM

Use this procedure to download an ASCII configuration from a TFTP server.

### Procedure

1. In the navigation tree, double-click **Edit** to open the Edit tree.
2. Double-click **File System**.
3. Click the **Ascii Config File** tab.
4. In **TftpServerInetAddressType**, choose the TFTP server internet address type .
5. In TftpServerInetAddress, enter the TFTP server IP address.
6. In AsciiConfigFilename, enter the configuration file name.
7. In AsciiConfigManualDownload, choose **downloadNow**.

8. On the toolbar, click **Apply**.

### ASCII Config File field descriptions

The following table describes the fields on the Ascii Config File tab.

| Name | Description |
|---|---|
| **TftpServerInetAddressType** | Specifies the IP version of the TFTP server address. |
| **TftpServerInetAddress** | Specifies the TFTP server IP address. |
| **AsciiConfigFilename** | Specifies the name of the ASCII configuration file. |
| **AsciiConfigManualDownload** | downloadNow — Initiates manual configuration download |

## Downloading a configuration file automatically using EDM

Use this procedure to download a configuration file automatically.

### Procedure

1. In the navigation tree, double-click **Edit** to open the Edit tree.
2. Double-click **File System**.
3. Click the **Ascii Config File** tab.
4. In **TftpServerInetAddressType**, choose the TFTP server internet address type .
5. In AsciiConfigFilename, enter the configuration file name.
6. In AsciiConfigAutoDownload,, choose the automatic download source — either **useBootp**, to specify loading the ASCII configuration file at system start and using Bootp to obtain values for the TFTP address and file name, or use **useConfig**, to specify loading the ASCII configuration file at system start and using the locally configured values for the TFTP address and file name.
7. On the toolbar, click **Apply**.

### ASCII Config File field descriptions

The following table describes the fields on the Ascii Config File tab.

| Name | Description |
|---|---|
| **TftpServerInetAddressType** | Specifies the IP version of the TFTP server address. |
| **TftpServerInetAddress** | Specifies the TFTP server IP address. |

| Name | Description |
|---|---|
| **AsciiConfigFilename** | Specifies the name of the ASCII configuration file. |
| **AsciiConfigAutoDownload** | • disabled — Disabled automatic loading of ASCII configuration file at startup<br>• useBootp — Specifies loading the ASCII configuration file at startup and using BootP to obtain values for the TFTP address and file name<br>• useConfig — Specifies loading the ASCII configuration file at startup and using the locally configured values for the TFTP address and file name |
| **AsciiConfigAutoDldStatus** | Displays the configuration automatic download status |

# Binary configuration file management using EDM

Use the following procedures to manage binary configuration files.

## Storing a binary configuration file on a TFTP server using EDM

Use this procedure to store a binary configuration file on a TFTP server.

### Procedure

1. In the navigation tree, double-click **Edit** to open the Edit menu.
2. Double-click **File System**.
3. Click the **Config/Image/Diag file** tab.
4. In **TftpServerInetAddressType**, choose the TFTP server internet address type .
5. In TftpServerInetAddress, enter the TFTP server IP address.
6. In **BinaryConfigFilename**, enter the configuration file name.
7. In **Action**, select **upldConfig**.
8. On the toolbar, click **Apply**.

### Config Image Diag file tab field descriptions

The following table describes the fields on the Config/Image/Diag file tab.

| Name | Description |
|---|---|
| **TftpServerInetAddressType** | Specifies the IP version of the TFTP server address. |
| **TftpServerInetAddress** | Specifies the TFTP server IP address. |
| **BinaryConfigFilename** | Specifies the name of the binary configuration file. |
| **Action** | • dnldConfig—Downloads a configuration file to the switch.<br>• upldConfig—Uploads a configuration file to the switch from a designated location.<br>• dnldImg—Downloads a new software image to the switch.<br>• dnldImgIfNewer—Downloads a new software image to the switch only it if is newer than the current image.<br>• dnldImgNoReset—Downloads a new software image to the switch without a switch reset.<br>• dnldFW—Downloads a new diagnostic software image to the switch.<br>• dnldFwNoReset—Downloads a new diagnostic software image to the switch without a switch reset. |
| **Status** | Displays the status of the most recent action since the last switch restart. |

## Downloading a binary configuration file on a TFTP server using EDM

Use this procedure to download a binary configuration file on a TFTP server.

### Procedure

1. In the navigation tree, double-click **Edit** to open the Edit menu.
2. Double-click **File System**.
3. Click the **Config/Image/Diag file** tab.
4. In TftpServerInetAddress, enter the TFTP server IP address.
5. In **BinaryConfigFilename**, enter the configuration file name.

6. In **Action**, select **dnldConfig**.
7. On the toolbar, click **Apply**.

### Config Image Diag file tab field descriptions

The following table describes the fields on the Config/Image/Diag file tab.

| Name | Description |
|---|---|
| **TftpServerInetAddressType** | Specifies the IP version of the TFTP server address. |
| **TftpServerInetAddress** | Specifies the TFTP server IP address. |
| **BinaryConfigFilename** | Specifies the name of the binary configuration file. |
| **Action** | • dnldConfig—Downloads a configuration file to the switch.<br>• upldConfig—Uploads a configuration file to the switch from a designated location.<br>• dnldImg—Downloads a new software image to the switch.<br>• dnldImgIfNewer—Downloads a new software image to the switch only it if is newer than the current image.<br>• dnldImgNoReset—Downloads a new software image to the switch without a switch reset.<br>• dnldFW—Downloads a new diagnostic software image to the switch.<br>• dnldFwNoReset—Downloads a new diagnostic software image to the switch without a switch reset. |

## Saving current configuration to flash memory manually using EDM

Use this procedure to save the current configuration to flash memory manually.

### Procedure

1. In the navigation tree, double-click **Edit** to open the Edit tree.
2. Double-click **File System**.
3. Choose Save Configuration.

4. Deselect **AutosaveToNvramEnabled** — this option is enabled by default.
5. In **Action**, choose **copyConfigToNvram**.
6. On the toolbar, click **Apply**.

# Chapter 8: Supported standards and Request For Comments

## Supported standards and Request For Comments

This chapter lists the standards and Request For Comments (RFCs) supported by the Avaya ERS 3500 Series.

## Standards

The standards in the following list are supported on the switch:

- IEEE 802.1AB (Link Layer Discovery Protocol (LLDP) and LLDP-Media Endpoint Discover (LLDP-MED))
- IEEE 802.1Q (VLANs)
- IEEE 802.1p (Priority Queues)
- IEEE 802.1D (Spanning Tree)
- IEEE 802.1w (Rapid Spanning Tree)
- IEEE 802.1s (Multiple Spanning Tree Groups)
- IEEE 802.1X (Extensible Authentication Protocol (EAP))
- IEEE 802.3 (10BASE-T/100BASE-TX)
- IEEE 802.3u (100BASE-T (ANSI) Auto-Negotiation)
- IEEE 802.3x (Pause Frames / Flow Control)
- IEEE 802.3z (1000BASE-X)
- IEEE 802.3ab (1000BASE-T)
- IEEE 802.3ad (Link Aggregation Control Protocol (LACP))
- IEEE 802.3af (Power over Ethernet — PoE (15.4W))
- IEEE 802.3aq (10GBASE-LRM 10 Gbit/s Ethernet over fiber)
- IEEE 802.3at (Power over Ethernet plus— PoE+ (32W))

# RFCs and MIBs

For more information about networking concepts, protocols, and topologies, consult the following RFCs and MIBs:

- RFC 783 Trivial File Transfer Protocol (TFTP)
- RFC 791/ 950 Internet Protocol (IP)
- RFC 792 Internet Control Message Protocol (ICMP)
- RFC 826 Address Resolution Protocol (ARP)
- RFC 854 Telnet Server and Client
- RFC 951/ 1542 (BOOTP)
- RFC 1112 Internet Group Management Protocol v1 (IGMPv1)
- RFC 1213 MIB-II
- RFC 1215 SNMP Traps Definition
- RFC 1271 / 1757 / 2819 RMON
- RFC 1361 / 1769 Simple Network Time Protocol (SNTP)
- RFC 1493 (Bridge MIB)
- RFC 1573 / 2863 Interface MIB
- RFC 1643 / 2665 Ethernet MIB
- RFC 1905 / 3416 SNMP
- RFC 1906 / 3417 SNMP Transport Mappings
- RFC 1907 / 3418 SNMP MIB
- RFC 1945 HTTP v1.0
- RFC 1981 Path MTU Discovery for IPv6
- RFC 2011 SNMP v2 MIB for IP
- RFC 2012 SNMP v2 MIB for TCP
- RFC 2013 SNMP v2 MIB for UDP
- RFC 2131 DHCP Client
- RFC 2132 DHCP Options 6, 43 & 60
- RFC 2138 RADIUS
- RFC 2236 Internet Group Management Protocol v2 (IGMPv2)
- RFC 2460 Internet Protocol v6 (IPv6 ) Specification

- RFC 2461 Neighbor Discovery for IPv6
- RFC 2462 Auto-configuration of link local addresses
- RFC 2474 Differentiated Services Support
- RFC 2570 / 3410 SNMPv3
- RFC 2571 / 3411 SNMP Frameworks
- RFC 2572 / 3412 SNMP Message Processing
- RFC 2573 / 3413 SNMPv3 Applications
- RFC 2574 / 3414 SNMPv3 USM
- RFC 2575 / 3415 SNMPv3 VACM
- RFC 2576 / 3584 Co-existence of SNMP v1/v2/v3
- RFC 2616 HTTP
- RFC 2660 HTTPS (Secure Web)
- RFC 2665 Ethernet MIB
- RFC 2674 Q-Bridge MIB
- RFC 2737 Entity MIBv2
- RFC 2819 RMON MIB
- RFC 2863 Interfaces Group MIB
- RFC 2866 RADIUS Accounting
- RFC 2869 RADIUS Extensions (interim updates)
- RFC 3046 (& 5010) DHCP option 82, Relay Agent Information Option
- RFC 3058 RADIUS Authentication
- RFC 3361 DHCP option 120 SIP Servers
- RFC 3376 Internet Group Management Protocol v3 (IGMPv3)
- RFC 3576 RADIUS Change of Authorization
- RFC 4007 Scoped Address Architecture
- RFC 4193 Unique Local IPv6 Unicast Addresses
- RFC 4252 SSH
- RFC 4291 IPv6 Addressing Architecture
- RFC 4301 Security Architecture for the Internet Protocol
- RFC 4432 SSHv2 RSA
- RFC 4443 Internet Control Message Protocol (ICMPv6) Update to RFC 2463

- RFC 4675 RADIUS Attributes for VLAN and Priority Support
- RFC 5859 TFTP Server DHCP option

# Appendix A: Ethernet Routing Switch 3500 Series hardware illustrations

The following sections illustrate the Ethernet Routing Switch 3500 Series hardware information.

**Related Topics:**


- Package Contents on page 61
- ERS 3510 Series Mounting on page 68
- ERS 3500 Series Front Panel Views on page 64
- ERS 3500 Series Rear Panel Views on page 65
- ERS 3500 Series Power Connectors on page 67
- ERS 3510GT and 3510GT-PWR+ Rack Mounting Hardware on page 71
- ERS 3524GT/3524GT-PWR+, ERS 3526T/3526T–PWR+, and ERS 3549GTS/3549GTS-PWR+ Rack Mounting Hardware on page 76
- Small Form Factor Pluggable (SFP) transceivers on page 78


## Package Contents

The following figure illustrates common package contents for the Ethernet Routing Switch 3500 Series.

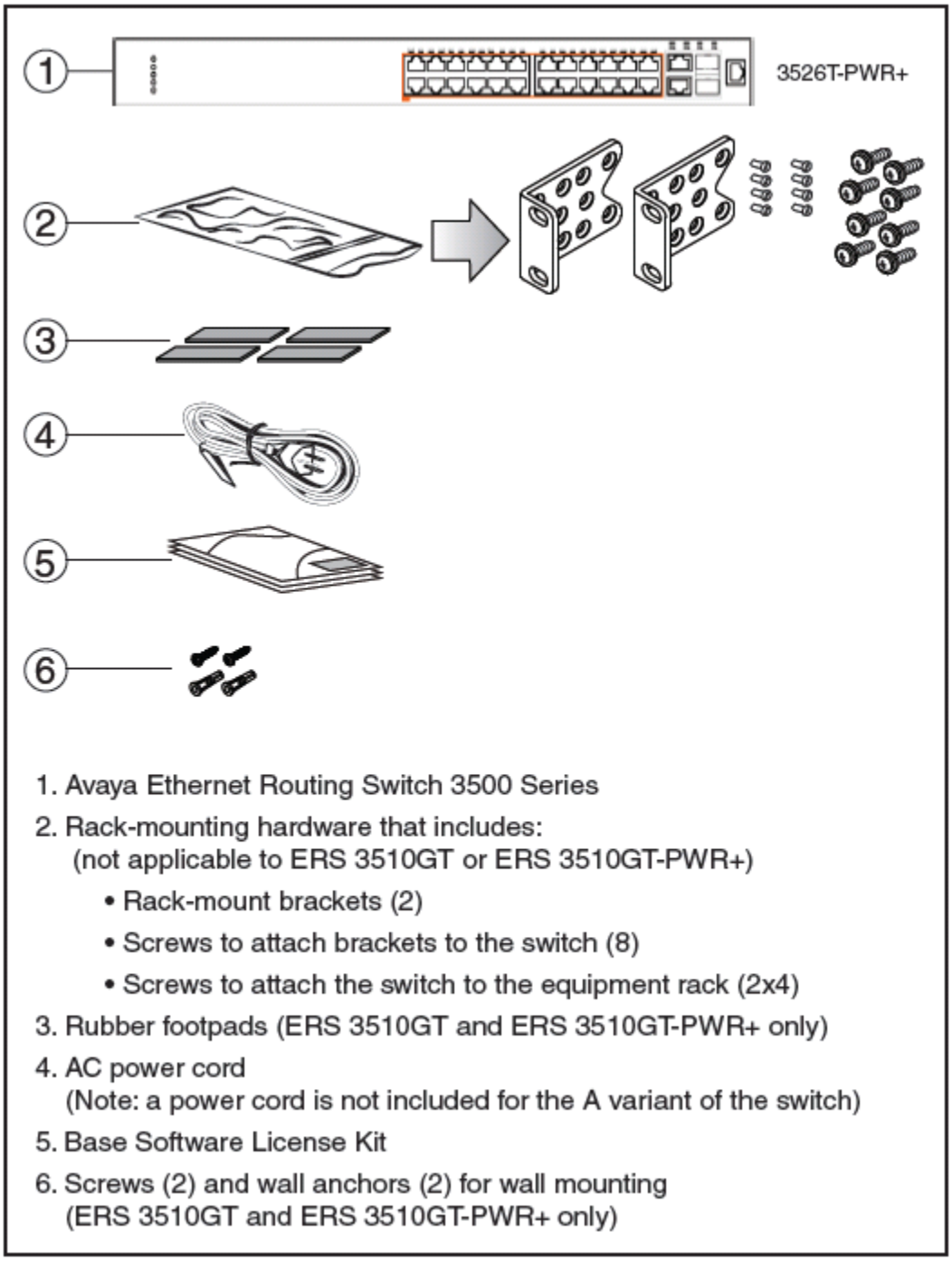


**Figure 15: ERS 3500 Series Package Contents**

Spare Rack Mount Kit (not shown) – can be used to mount an ERS 3510GT or ERS 3510GT–PWR+ under a desk or on to another surface. This kit is also used as a replacement rack mount kit for ERS 3524GT, ERS 3524GT-PWR+, ERS 3526T, ERS 3526T-PWR+, ERS 3549GTS, and ERS 3549GTS-PWR+ systems (Order Code AL3511001-E6).

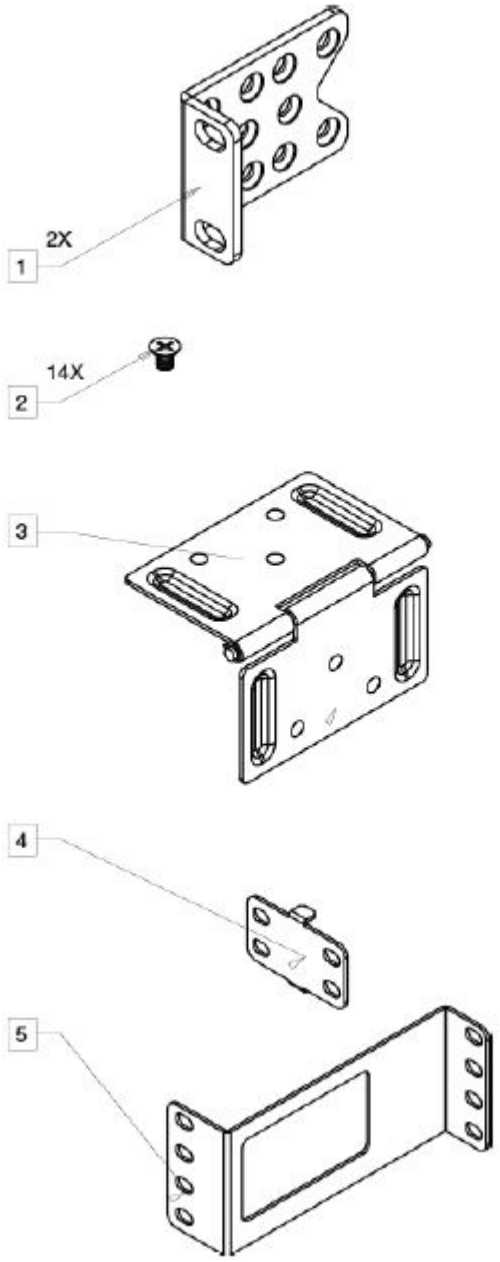


**Figure 16: ERS 3510GT/3510GT-PWR+ Pair Rack Mount Kit**

ERS 3510GT/ 3510GT-PWR+ –Pair Rack Mount Kit — this accessory kit is used to connect two ERS 3510GT switches together side-by-side. The kit includes all necessary brackets and fasteners and must be ordered separately (Order Code AL3511002–E6).

| Item | Description | Quantity |
|---|---|---|
| 1 | Rack mount brackets | 2 |
| 2 | M4 flat head screws | 14 |

| Item | Description | Quantity |
|---|---|---|
| 3 | Hinged mating bracket | 1 |
| 4 | Rear bracket for mating identical 3510 switches | 1 |
| 5 | Rear bracket for mating 3510GT and 3510GT-PWR+ switches | 1 |

## ERS 3500 series front panel LED views

The following figures illustrate the ERS 3500 series front panel LED indicators.

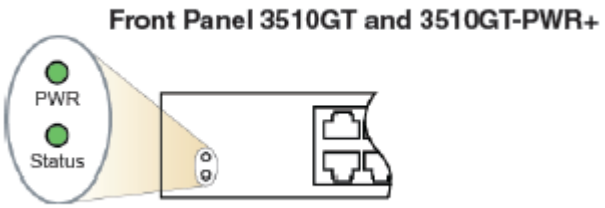


**Figure 17: ERS 3510GT/3510GT-PWR+ Series Front Panel LEDs**

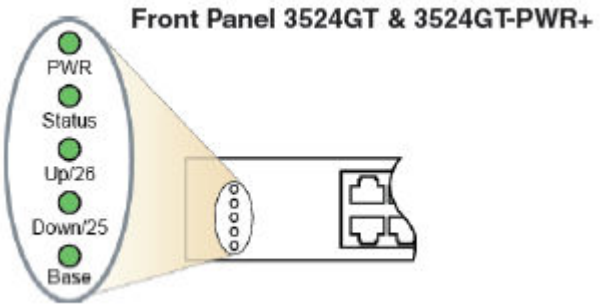


**Figure 18: ERS 3524 Front Panel LEDs**

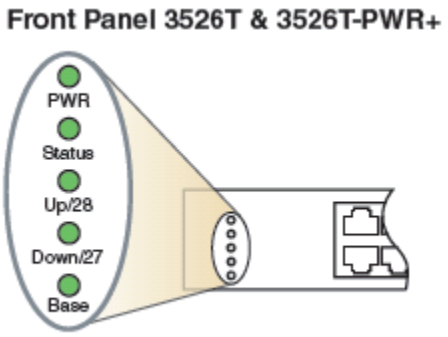


**Figure 19: ERS 3526 Front Panel LEDs**

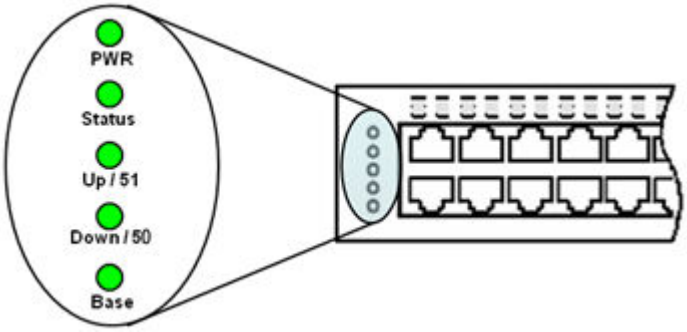


**Figure 20: ERS 3549GTS/GTS-PWR+ Front Panel LEDs**

## ERS 3500 series front panel port views

The following figures illustrate the front panel ports for the ERS 3500 Series.

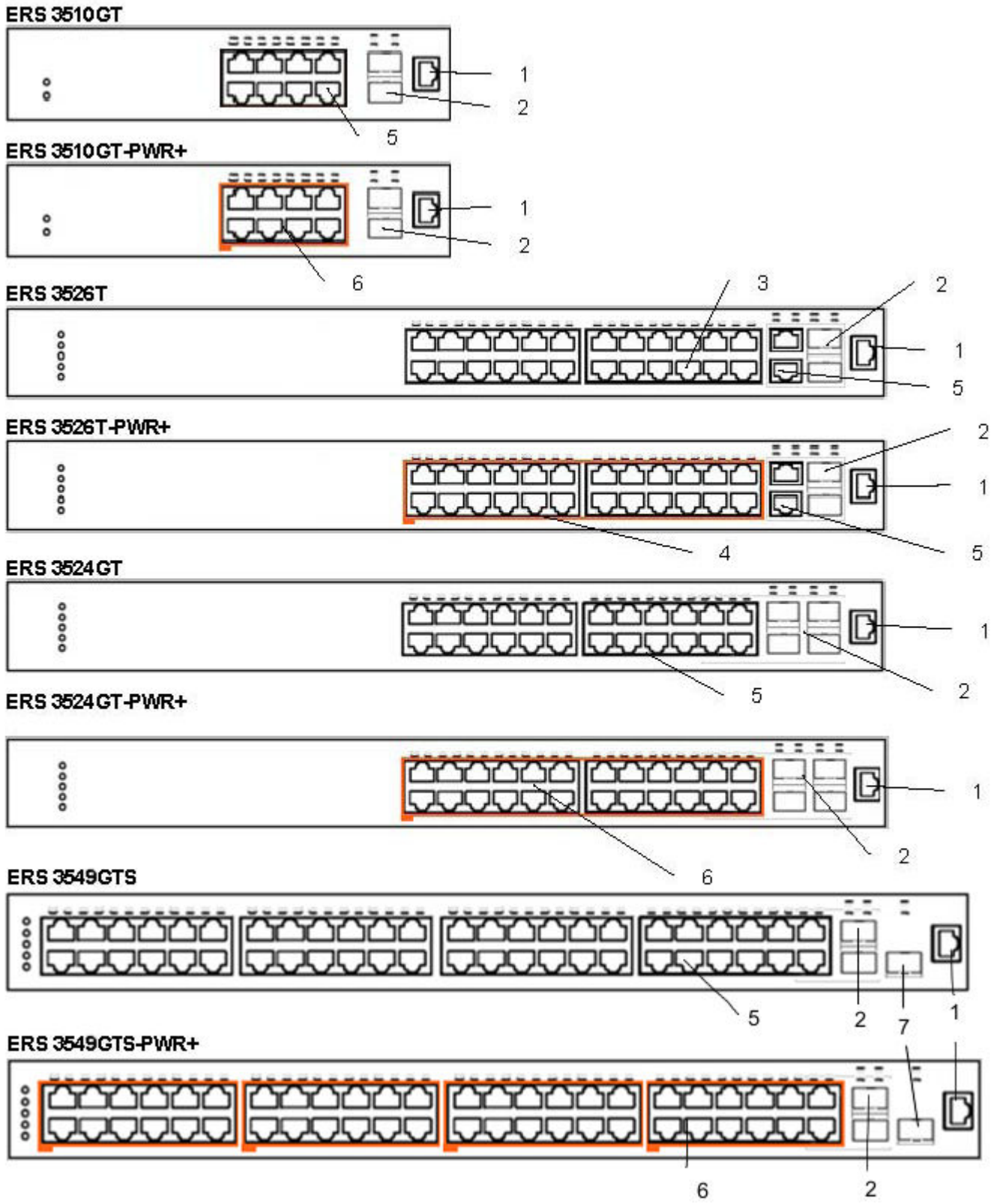


**Figure 21: ERS 3500 series front panel port illustrations**

**Table 4: Key**

| Item | Description |
|---|---|
| 1 | Console RJ45 port |
| 2 | 1000Base-X SFP ports |
| 3 | 10/100 RJ45 ports |
| 4 | 10/100 RJ45 PoE+ ports |
| 5 | 10/100/1000 RJ45 ports |
| 6 | 10/100/1000 RJ45 PoE+ ports |
| 7 | SFP+ for SFP+ port |

## ERS 3500 Series AC power

Required cable: AC power cord that meets the requirements of your local electrical code. The following table describes the International power cord specifications.

**Table 5: International power cord specifications**

| Country and plug description | Specifications | Typical plug |
|---|---|---|
| Continental Europe<br>• CEE7 standard VII male plug<br>• Harmonized cord (HAR marking on the outside of the cord jacket to comply with the CENELEC Harmonized Document HD-21) | 220 or 230 VAC<br>50 Hz<br>Single phase | <br>228FA |
| U.S./Canada/Japan<br>• NEMA5-15P male plug<br>• UL-recognized (UL stamped on cord jacket)<br>• CSA-certified (CSA label secured to the cord) | 100 or 120 VAC<br>50-60 Hz<br>Single phase | 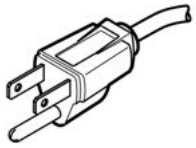 <br>227FA |

| Country and plug description | Specifications | Typical plug |
|---|---|---|
| United Kingdom<br>• BS1363 male plug with fuse<br>• Harmonized cord | 240 VAC<br>50 Hz<br>Single phase | 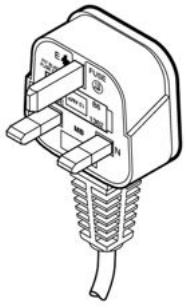 <br>229FA |
| Australia<br>AS3112-1981 male plug | 240 VAC<br>50 Hz<br>Single phase | 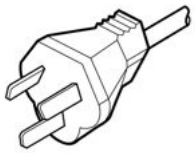 <br>230FA |

The Ethernet Routing Switch 3500 series does not have a power switch. When you connect the AC power cord to a suitable AC power outlet, the switch powers up immediately.

Connect the AC power cord to the back of the switch, and then connect the cord to a power outlet.

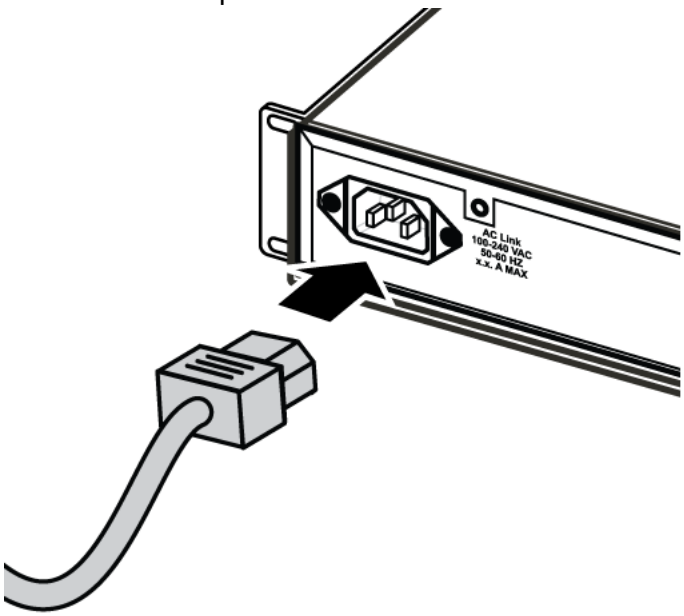


**Figure 22: Connecting the AC power cord to the Ethernet Routing Switch 3500 Series**

## ERS 3510 Series Mounting

The following figures illustrate the 3510GT/3510GT-PWR+ series table and wall mounting accessories.

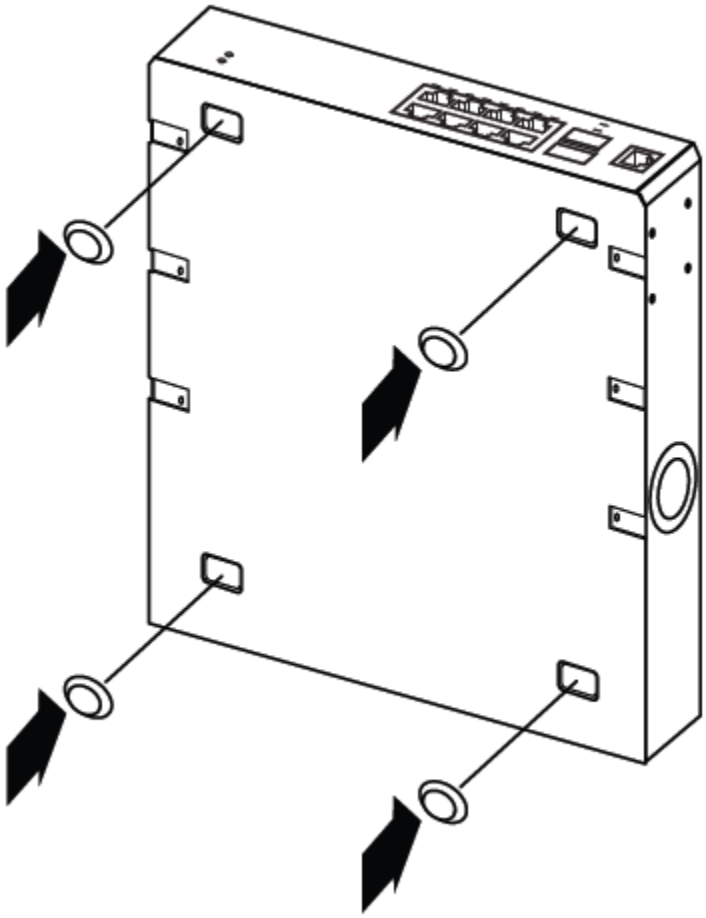

**Figure 23: ERS 3510GT/3510GT-PWR+ Rubber footpad installation**

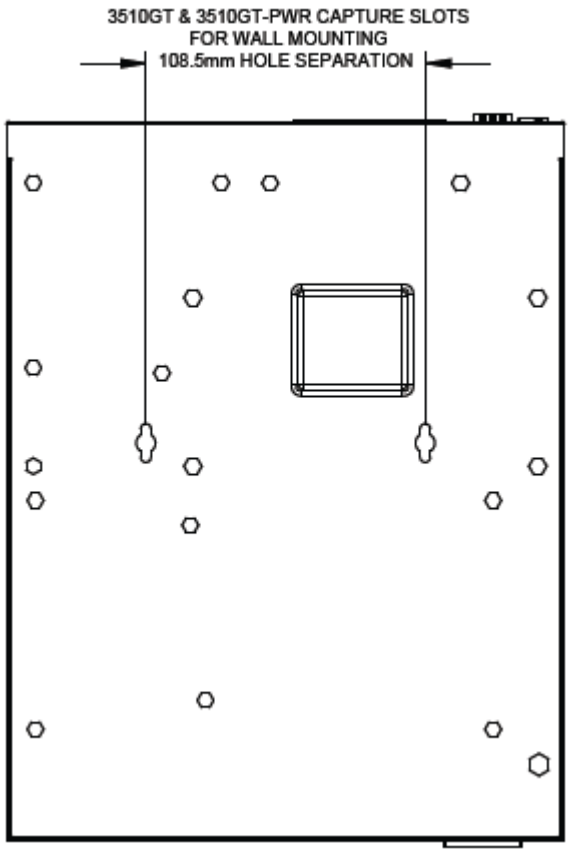


**Figure 24: ERS 3510GT/3510GT-PWR+ Wall Mount Capture Slots**

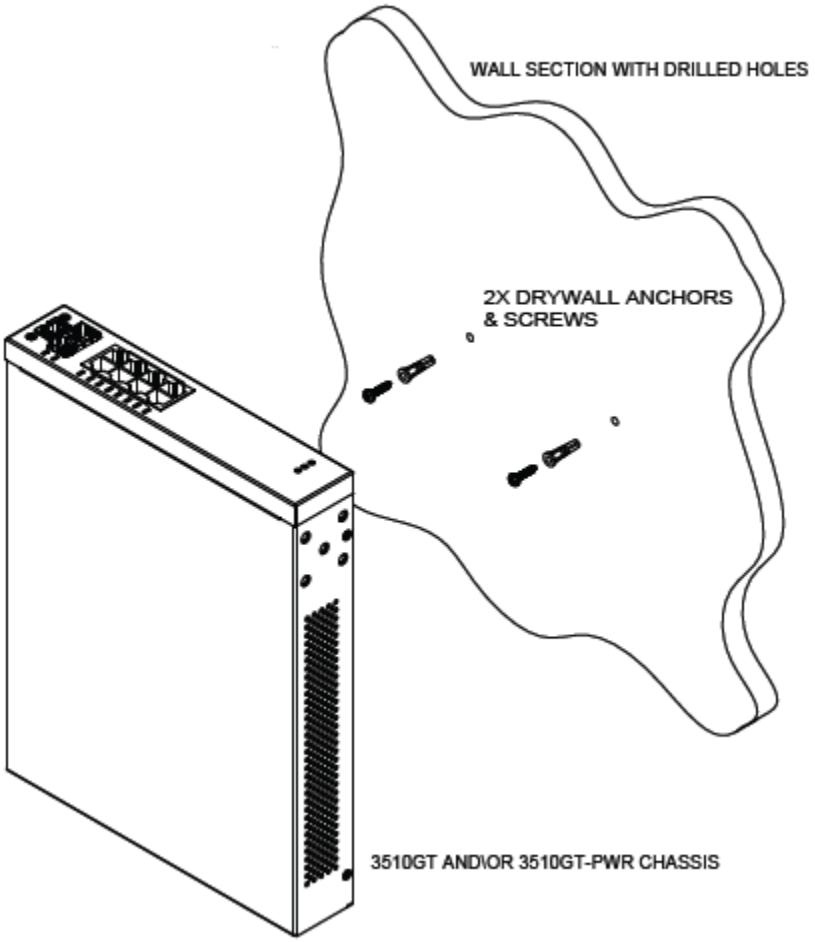


**Figure 25: ERS 3510GT/3510GT-PWR+ Wall Mount**

## ERS 3510GT and 3510GT-PWR+ Rack Mounting Hardware

The following figures illustrate the ERS 3510GT/3510GT-PWR+ Rack mounting accessories.

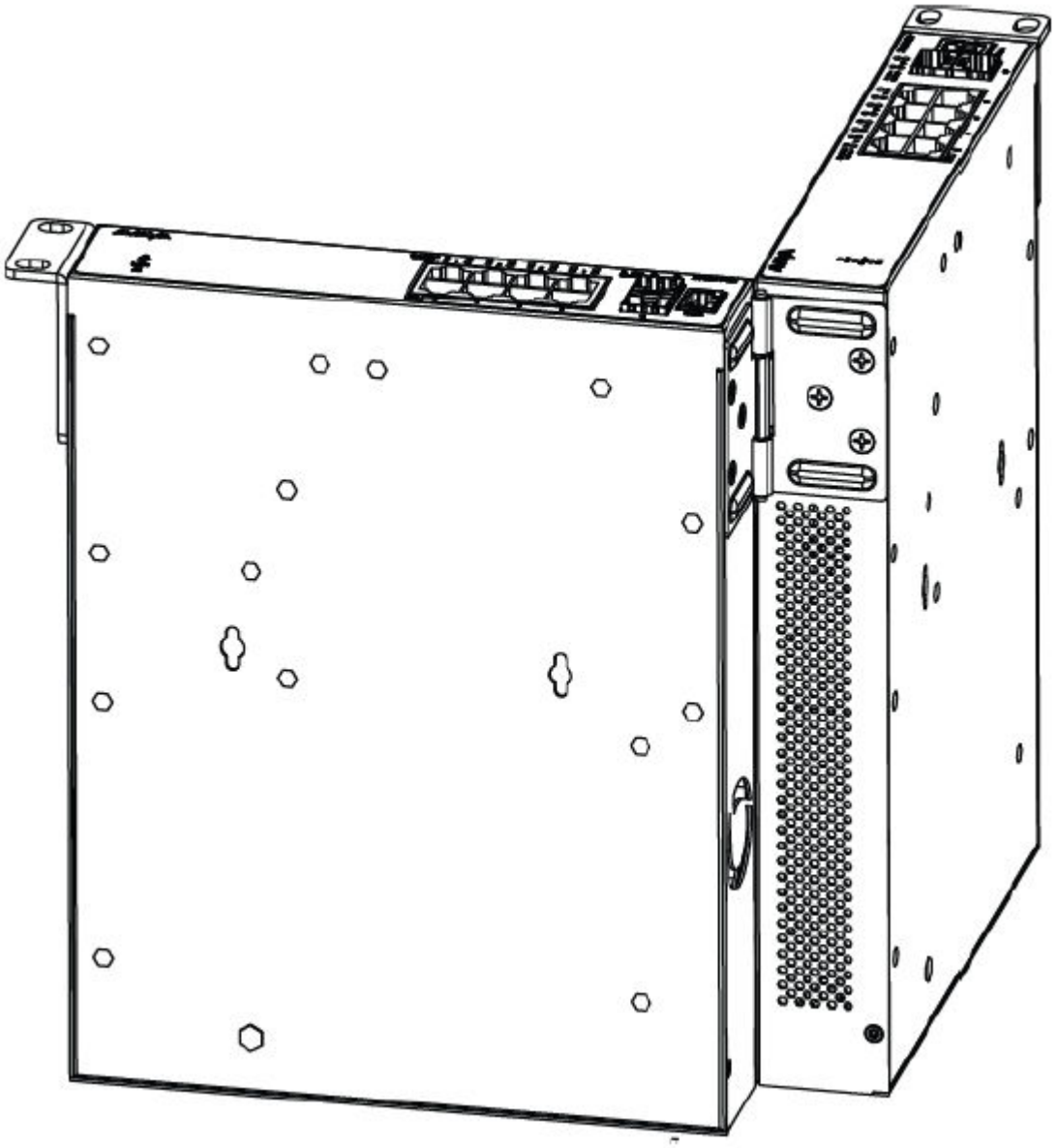

**Figure 26: Hinged mating bracket position**

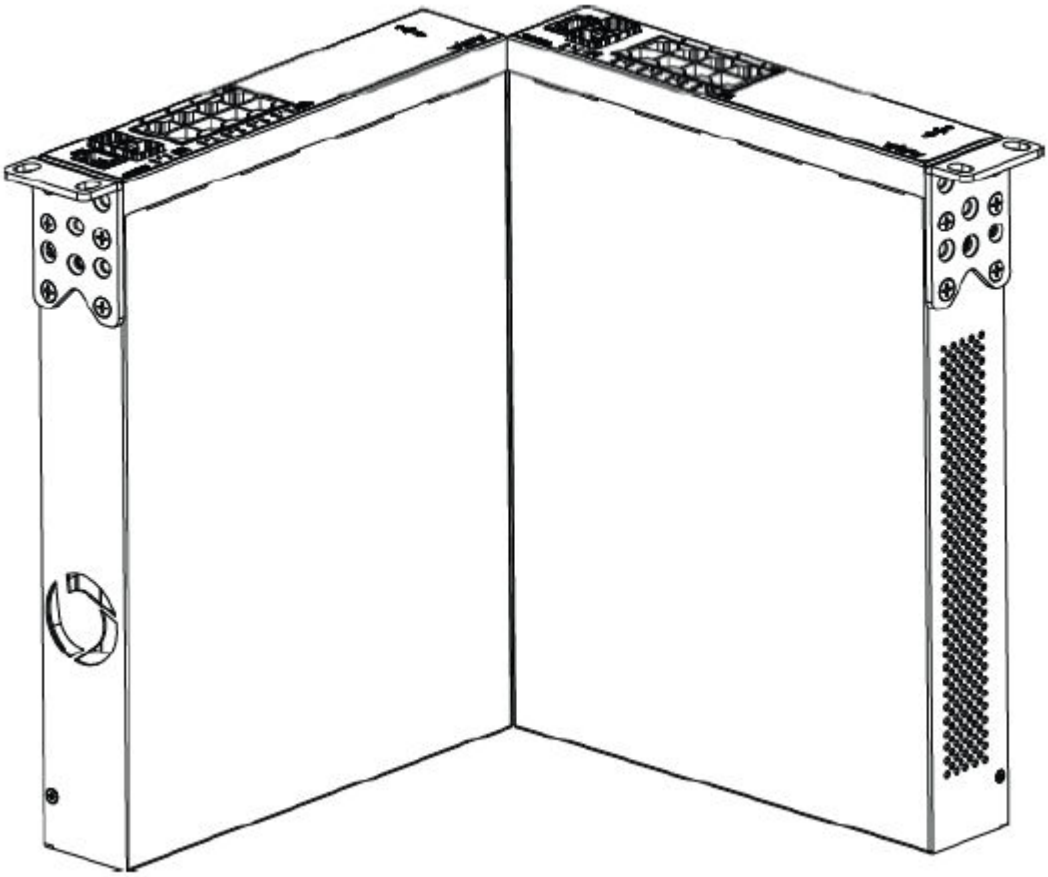

**Figure 27: ERS 3510GT/3510GT-PWR+ Standard rack mount bracket position**

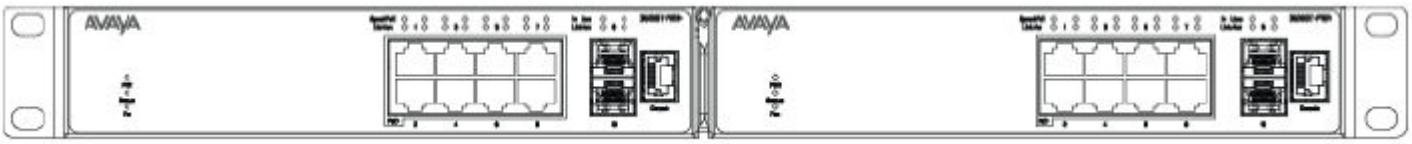

**Figure 28: ERS 3510GT/3510GT-PWR+ Hinged mating bracket folded view**

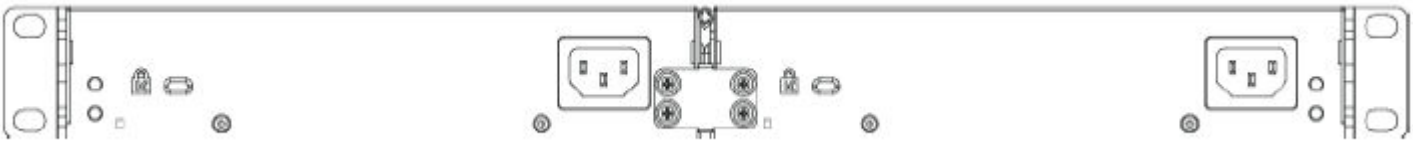

**Figure 29: Rear Bracket to connect two ERS 3510GT or two 3510GT-PWR+ switches**

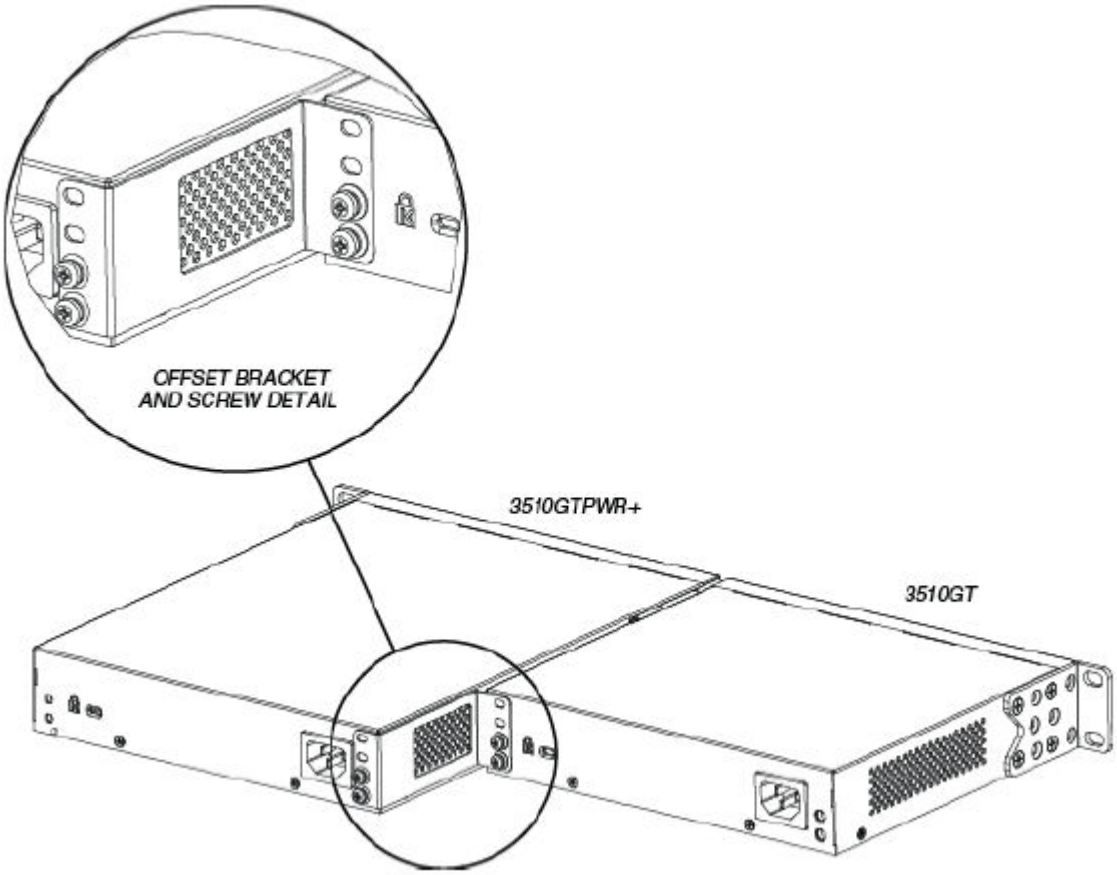


**Figure 30: Offset Bracket to connect ERS 3510GT switch and one ERS 3510GT-PWR+ switch**

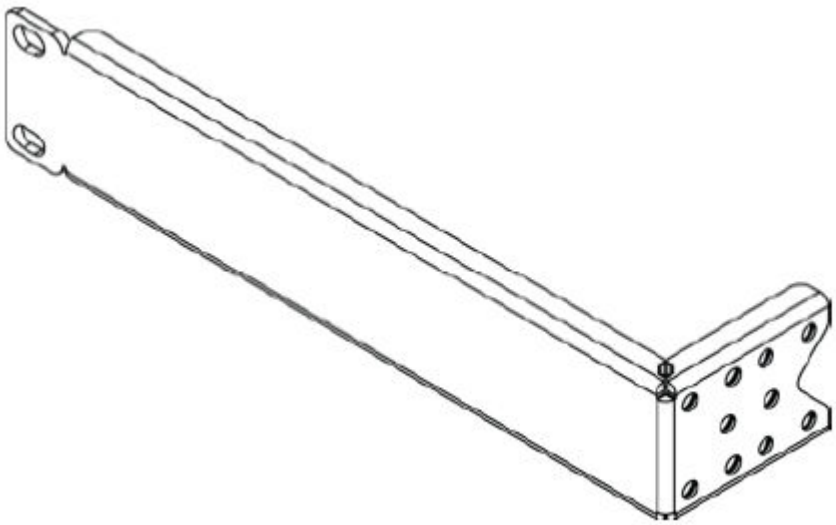

**Figure 31: ERS 3510GT/3510GT-PWR+ Single Rack Mount Accessory Kit**

This accessory kit is used to mount a single ERS 3510GT or ERS 3510GT-PWR+ switch in a standard 19 inch rack. The kit contains the bracket and all required fasteners and must be order separately (Order Code AL3511003–E6).

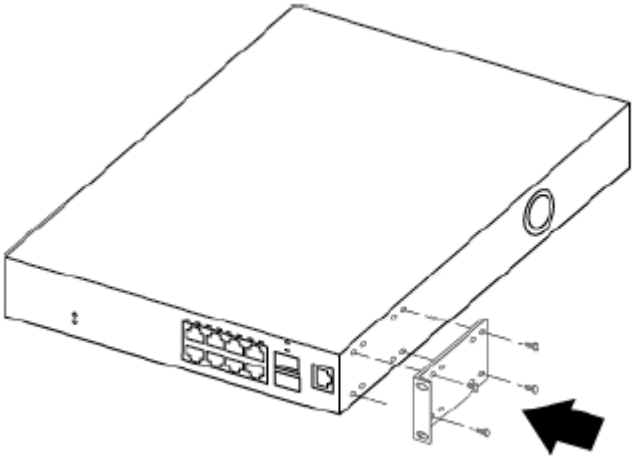

**Figure 32: ERS 3510GT/3510GT-PWR+ Single Rack Mount Kit small bracket placement**

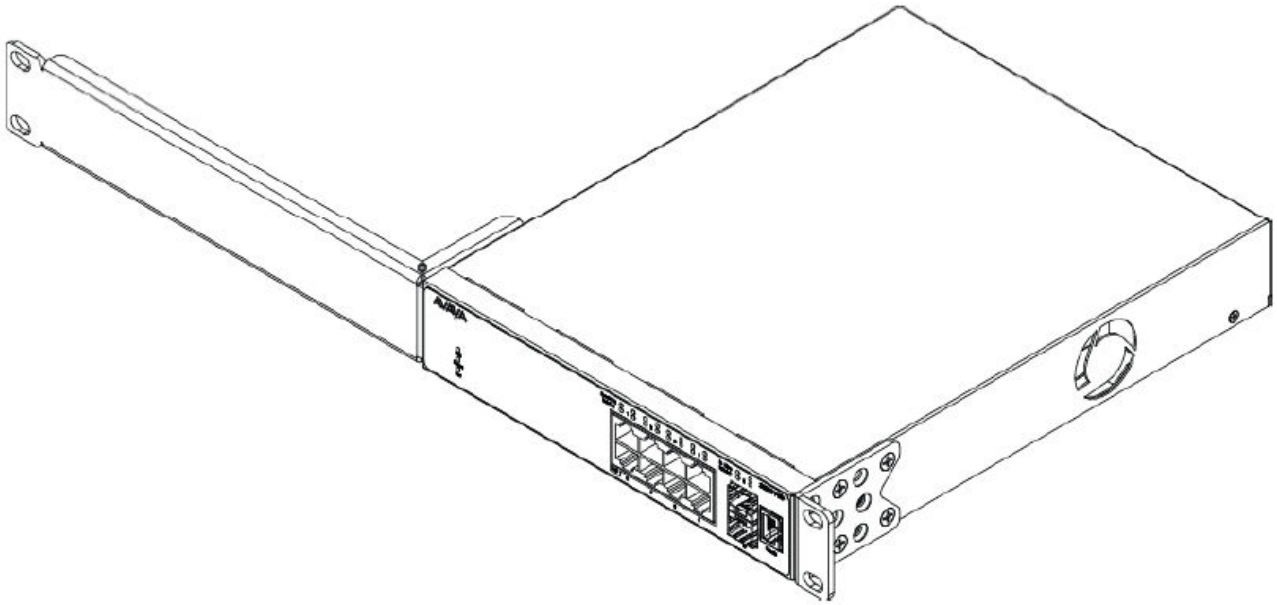

**Figure 33: ERS 3510GT/3510GT-PWR+ Single Rack Mount Kit long bracket placement**

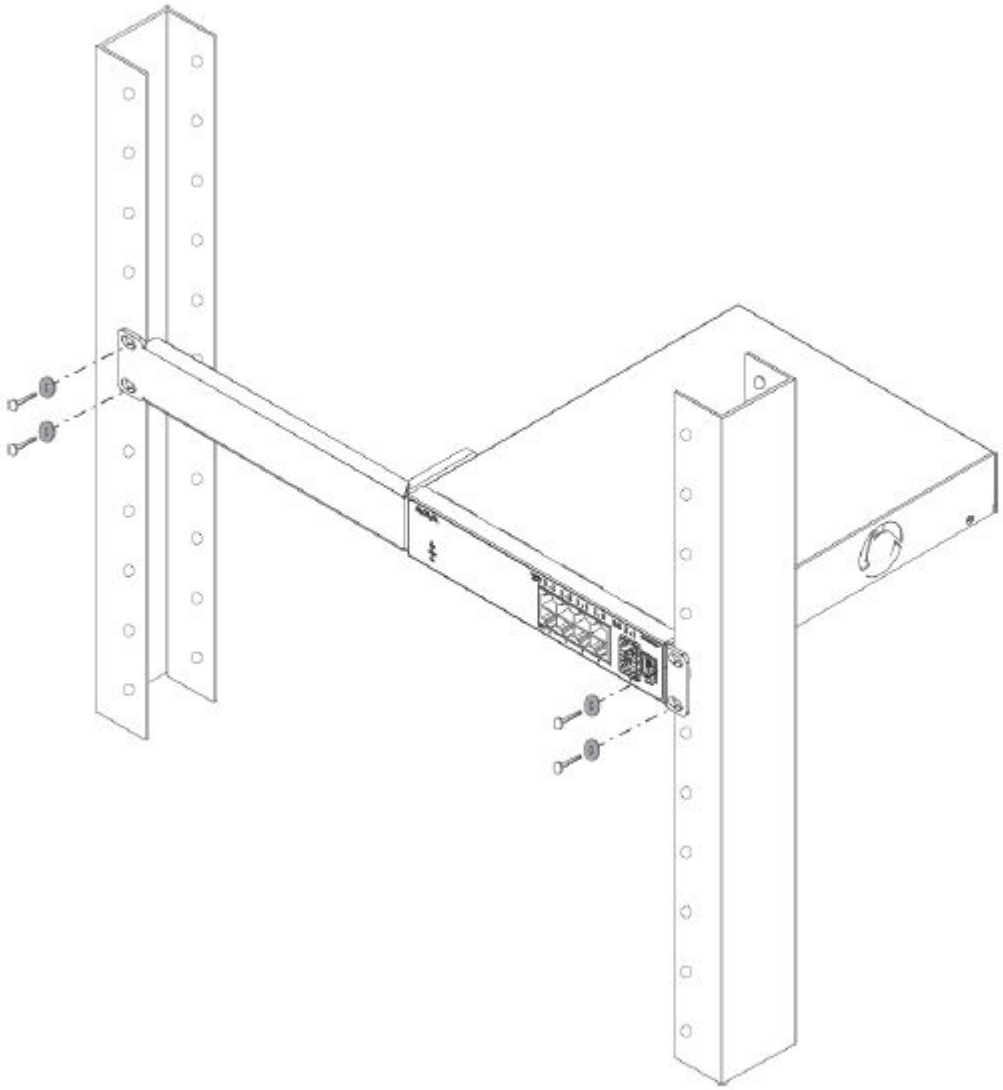

**Figure 34: ERS 3510GT/3510GT-PWR+ Single Rack Mount Kit — Rack installation**

## ERS 3524GT/3524GT-PWR+, ERS 3526T/3526T–PWR+, and ERS 3549GTS/3549GTS-PWR + Rack Mounting Hardware

The following figures illustrate the ERS 3524GT/3524GT-PWR+, ERS 3526T/3526T–PWR+, and ERS 3549GTS/3549GTS-PWR+ Rack Mounting Hardware accessories.

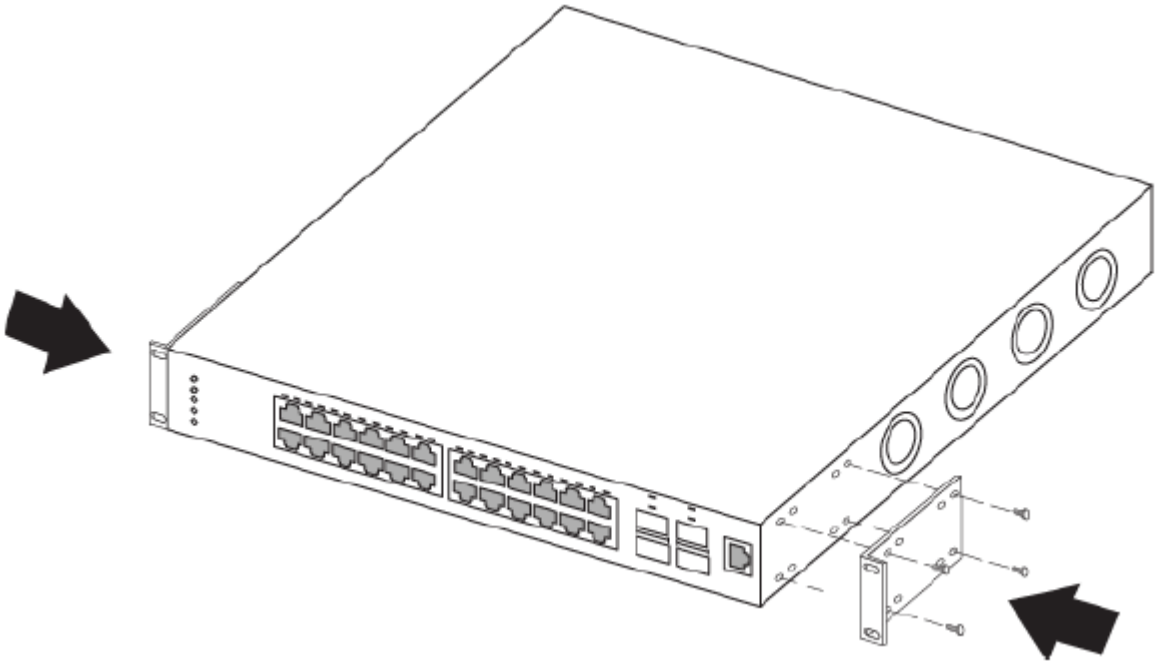

**Figure 35: ERS 3524GT/3524GT-PWR+, ERS 3526T/3526T–PWR+, and ERS 3549GTS/3549GTS-PWR+ Rack —Mount bracket**

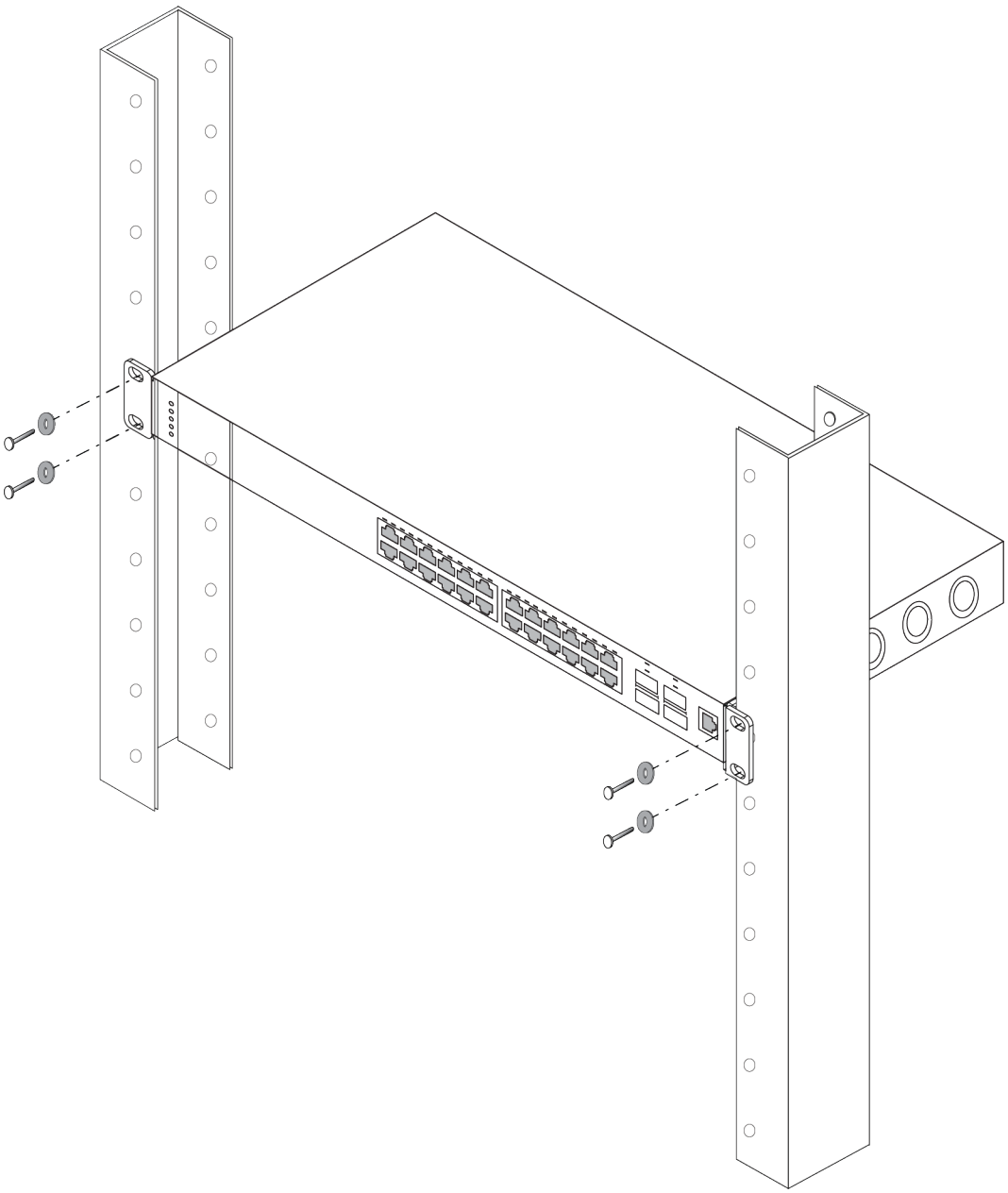

**Figure 36: ERS 3524GT/3524GT-PWR+, ERS 3526T/3526T–PWR+, and ERS 3549GTS/3549GTS-PWR+ Rack —Mount bracket installation**

## Small Form Factor Pluggable (SFP) transceivers

SFP transceivers connect a device motherboard to a fiber optic or unshielded twisted 6 pair network cable.

The following figures provide an illustration of Avaya SFPs.

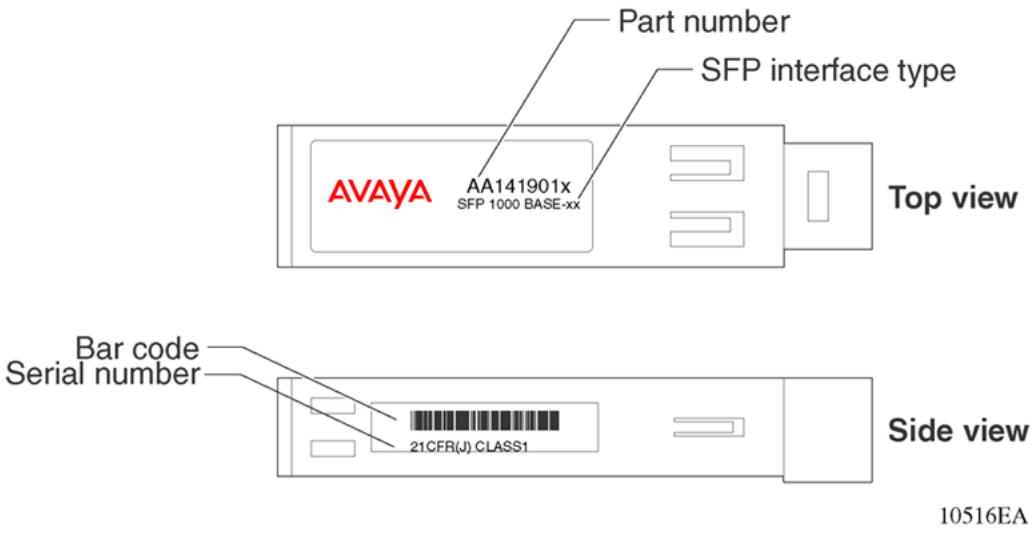


**Figure 37: SFP label**

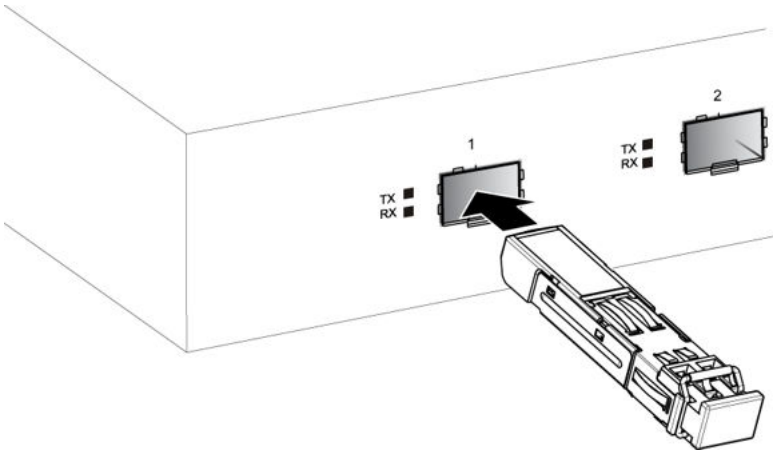


**Figure 38: Installing an SFP to the ERS 3500 Series 1000Base-X SFP port**

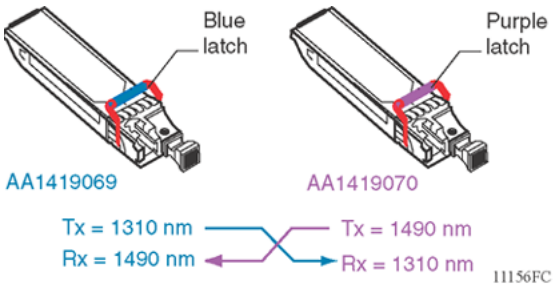


**Figure 39: 1000BASE-BX Bidirectional SFP**

The following figures show typical locking and extractor mechanisms used on SFP transceivers

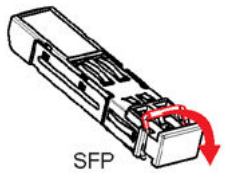


**Figure 40: SFP bore plug locking and extraction mechanism**

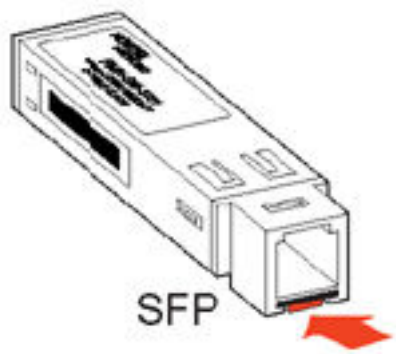


**Figure 41: 1000BASE-SX MT-RJ SFP locking mechanism**

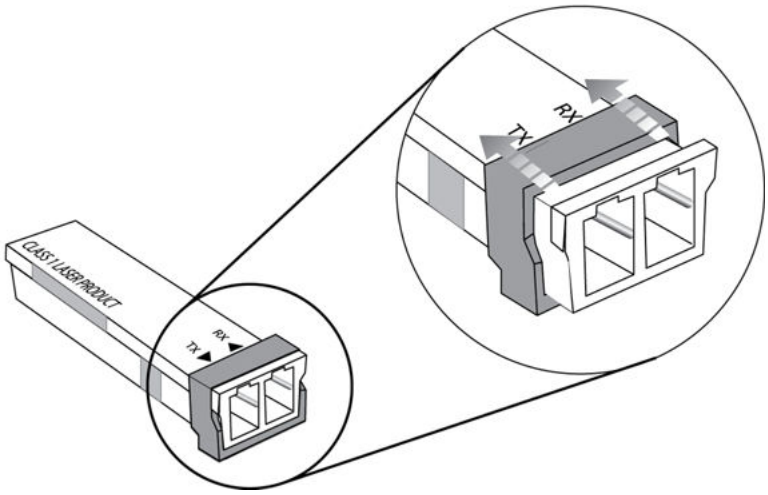


**Figure 42: Wrap-around latch-type extraction mechanism**