Installing Avaya Virtual Services Platform 4450GTX-HT-PWR+ Switch

Release 4.2
NN46251-304
Issue 03.03
July 2015

Contents

Chapter 1: Introduction ... 3
Purpose ... 3
Related Resources ... 3
Support ... 6
Chapter 2: New in this release ... 8
Features ... 8
Chapter 3: Hardware models ... 9
Platform power supplies ... 9
Supported optical devices ... 10
Chapter 4: Installing the Avaya VSP 4000 4450GTX-HT-PWR+ ... 12
Installation fundamentals ... 12
Electrostatic discharge ... 12
Preventing electrostatic discharge damage ... 13
Preventing electrostatic damage in new cable installations ... 13
Environmental requirements ... 14
Airflow direction ... 15
Package contents ... 15
Installing the Avaya Virtual Services Platform 4000 on a table or shelf ... 16
Installing the Avaya Virtual Services Platform 4000 in an equipment rack ... 17
Cable requirements for the Avaya Virtual Services Platform 4000 ... 19
Installation and removal of Small Form-factor Pluggable (SFP) transceivers ... 19
Installing SFP transceivers ... 19
Removing SFP transceivers ... 20
RJ-45 connector pin assignments ... 20
Console port pin assignments ... 21
Power specifications for the Avaya Virtual Services Platform 4000 ... 21
Power specifications for Avaya VSP 4000 4450GTX-HT-PWR+ switch ... 22
Avaya Virtual Services Platform power supply power specification ... 22
Installing the Avaya Virtual Services Platform 4000 power supply ... 24
Connect AC power ... 25
Power cord specifications ... 25
Connect power to the front panel ... 26
Check Light Emitting Diode (LED) on the Avaya Virtual Services Platform 4000 ... 28
Front panel LEDs ... 28
Switch LED state indicators ... 29
Port LED state indicators ... 30
Chapter 5: Translations of safety messages ... 32

Chapter 1: Introduction

Purpose

This guide provides information and instructions to install a Virtual Services Platform 4000 (VSP 4000) 4450GTX-HT-PWR+ system.

Related Resources

Documentation

See *Documentation Roadmap for Avaya Virtual Services Platform 4000 Series,* NN46251-100, for a list of the documentation for this product.

Training

Ongoing product training is available. For more information or to register, you can access the Web site at www.Avaya-learning.com.

Viewing Avaya Mentor videos

Avaya Mentor videos provide technical content on how to install, configure, and troubleshoot Avaya products.

About this task

Videos are available on the Avaya Support website, listed under the video document type, and on the Avaya-run channel on YouTube.

Procedure

- To find videos on the Avaya Support website, go to http://support.avaya.com and perform one of the following actions:
  - In **Search**, type `Avaya Mentor Videos` to see a list of the available videos.

- In **Search**, type the product name. On the Search Results page, select **Video** in the **Content Type** column on the left.

- To find the Avaya Mentor videos on YouTube, go to www.youtube.com/AvayaMentor and perform one of the following actions:
  - Enter a key word or key words in the **Search Channel** to search for a specific product or topic.
  - Scroll down Playlists, and click the name of a topic to see the available list of videos posted on the website.

Note:

Videos are not available for all products.

Subscribing to e-notifications

Subscribe to e-notifications to receive an email notification when documents are added to or changed on the Avaya Support website.

About this task

You can subscribe to different types of general notifications, for example, Product Correction Notices (PCN), which apply to any product or a specific product. You can also subscribe to specific types of documentation for a specific product, for example, Application & Technical Notes for Ethernet Routing Switch 8800.

Procedure

1. In an Internet browser, go to https://support.avaya.com.
2. Type your username and password, and then click **Login**.
3. Under **My Information**, select **SSO login Profile**.
4. Click **E-NOTIFICATIONS**.
5. In the GENERAL NOTIFICATIONS area, select the required documentation types, and then click **UPDATE**.

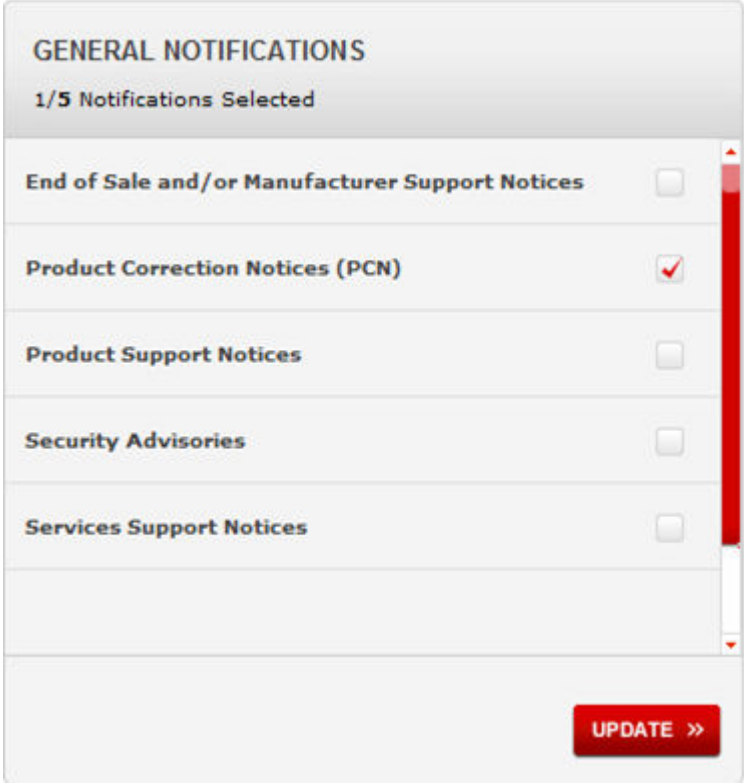

6. Click **OK**.
7. In the PRODUCT NOTIFICATIONS area, click **Add More Products**.

8. Scroll through the list, and then select the product name.
9. Select a release version.
10. Select the check box next to the required documentation types.

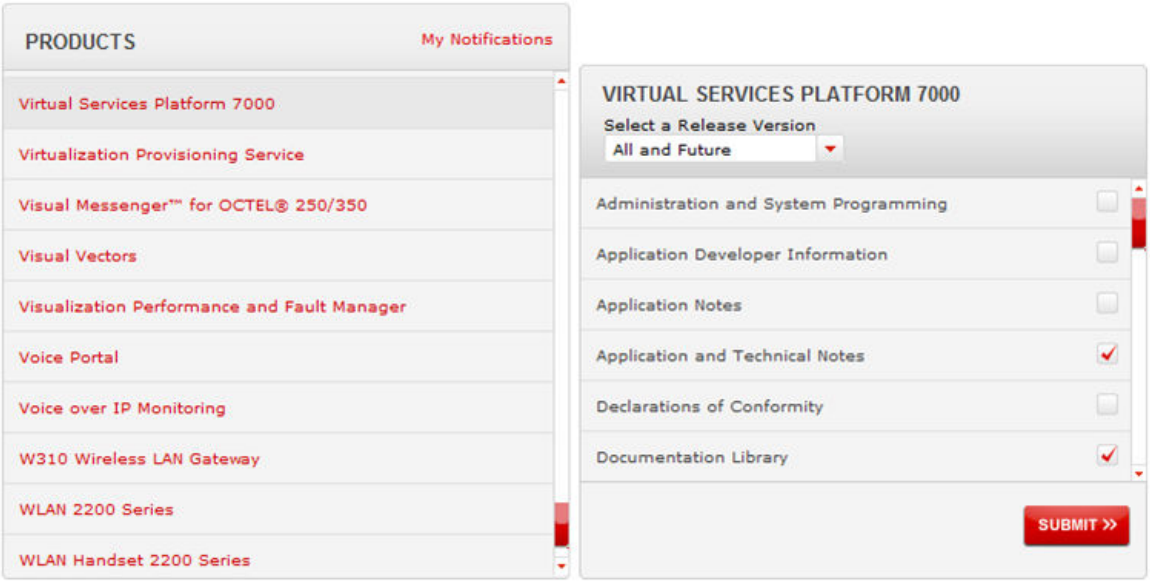

11. Click **Submit**.

Support

Go to the Avaya Support website at http://support.avaya.com for the most up-to-date documentation, product notices, and knowledge articles. You can also search for release notes, downloads, and resolutions to issues. Use the online service request system to create a service request. Chat with live agents to get answers to questions, or request an agent to connect you to a support team if an issue requires additional expertise.

Searching a documentation collection

On the Avaya Support website, you can download the documentation library for a specific product and software release to perform searches across an entire document collection. For example, you can perform a single, simultaneous search across the collection to quickly find all occurrences of a particular feature. Use this procedure to perform an index search of your documentation collection.

Before you begin

- Download the documentation collection zip file to your local computer.
- You must have Adobe Acrobat or Adobe Reader installed on your computer.

Procedure

1. Extract the document collection zip file into a folder.
2. Navigate to the folder that contains the extracted files and open the file named <*product_name_release*>.pdx.

3. In the Search dialog box, select the option **In the index named <*product_name_release*>.pdx**.
4. Enter a search word or phrase.
5. Select any of the following to narrow your search:
   - Whole Words Only
   - Case-Sensitive
   - Include Bookmarks
   - Include Comments
6. Click **Search**.

   The search results show the number of documents and instances found. You can sort the search results by Relevance Ranking, Date Modified, Filename, or Location. The default is Relevance Ranking.

Chapter 2: New in this release

The following sections detail what is new in *Installing Avaya Virtual Services Platform4450GTX-HT-PWR+Switch*, NN46251–304.

Features

See the following section for information about feature changes for Release 4.2.

Airflow direction

Release 4.2 adds information on the airflow direction. The airflow direction in the VSP 4450GTX-HT-PWR+ for the top half of the switch, where the components exist, is from left to right (as viewed from the front). The airflow direction for the bottom half of the VSP 4450GTX-HT-PWR+, where the power supplies exist, is from front to back. For more information, see Airflow direction on page 15.

Chapter 3: Hardware models

The following table describes the VSP 4450GTX-HT-PWR+ hardware.

Table 1: Hardware

VSP 4000 model	Description	Part number
VSP 4450GTX-HT-PWR+	• 48 10/100/1000 BaseTX RJ-45 ports with 802.3at PoE+ • two shared SFP ports • two SFP+ ports • Base Software License • one (of two) field replaceable 1000W PSUs supplied with the chassis	EC4400A03-E6
	• Same content as EC4800A78-E6 with a NA power cord.	EC4400E03-E6

Platform power supplies

The Virtual Services Platform 4000 4450GTX-HT-PWR+ model supports two field-replaceable AC power supplies. One power supply is supplied with the chassis.

You can install a redundant power supply to support load sharing or to provide power redundancy.

The following table describes the Avaya Virtual Services Platform 4000 compatible AC power supplies and their part numbers (order codes). All the power supplies are EUED RoHS 5/6 compliant.

Note:

The 1000W AC power supply uses the IEC 60320 C16 AC power cord connector.

Use the order codes to order a replacement for the primary PSU or to order a redundant PSU for your VSP 4000 system.

Table 2: Power supply order codes

VSP 4000 PSU	Usage	Part number (order code)
1000W AC POE+ power supply	For use in VSP 4000 4450GTX-HT-PWR+ model.	EC4005?03-E6*
***Note**: The seventh character (?) of the switch order number must be replaced with the proper letter to indicate desired product nationalization. See the following for details: “A”: No power cord included. “E”: Includes North American power cord.		

Supported optical devices

Use optical devices to achieve high bit-rate communications and long transmission distances. The following section describes the supported optical devices on the VSP 4000 system.

Important:

Avaya branded SFP (1GigE) devices that are supported on the VSP 4850GTS can be used on the VSP 4450GTX-HT-PWR+ switch as they are certified and qualified as high temperature devices. However, if you use a non-high temperature SFP+ device, the device is logged as an unsupported high temperature device.

Avaya recommends that you use Avaya branded SFP and SFP+ transceivers as they undergo extensive qualification and testing. Avaya is not responsible for any problems that arise from using non-Avaya branded SFP and SFP+ transceivers.

Small Form Factor Pluggable (SFP) transceivers

SFPs are hot-swappable input and output enhancement components designed for use with Avaya products to allow gigabit Ethernet ports to link with other gigabit Ethernet ports over various media types.

You can use various SFP (1Gb/s) and SFP+ (10Gb/s) to attain different line rates and reaches. The following table describes the SFPs including the reach provided by various SFPs.

Important:

The attainable cable length can vary depending on the quality of the fiber optic cable used.

Small Form Factor Pluggable plus (SFP+) transceivers

SFP+ transceivers are hot-swappable input and output enhancement components that allow 10 gigabit connections. All Avaya SFP+ transceivers use Lucent connectors (LC) to provide precision keying and low interface losses.

For more information about SFP and SFP+ transceivers, including technical specifications and installation instructions, see *Installation - SFP and SFP+ transceivers for Avaya Virtual Services Platform 4000 Series,* NN46251-301.

Optical power considerations

When you connect the device to collocated equipment, ensure that enough optical attenuation exists to avoid overloading the receivers of each device. You must consider the minimum attenuation requirement based on the specifications of third-party equipment. For more information about minimum insertion losses for Avaya optical products, see *Installation - SFP and SFP+ transceivers for Avaya Virtual Services Platform 4000 Series,* NN46251-301.

Chapter 4: Installing the Avaya VSP 4000 4450GTX-HT-PWR+

Installation fundamentals

The following section describes the installation fundamentals for the VSP 4450GTX-HT-PWR+ model.

VSP 4450GTX-HT-PWR+ model

The VSP 4450GTX-HT-PWR+ model consists of:

1. 48 10/100/1000 Base TX RJ-45 ports with PoE+
2. two combo SFP ports supporting fiber or copper connection
3. two 1/10G SFP + ports for fiber or copper connection

Figure 1: VSP 4450GTX-HT-PWR+

1. VSP 4000 USB port

Note:

The VSP 4450GTX-HT-PWR+ model does not require a USB device in the USB port for normal operation. The USB port can be used for file transfer of configs and logs using a USB drive.

2. Switch LEDs
3. 10/100/1000 PoE+ ports (LEDs above ports)
4. Combo port SFP slots. Supports Avaya 1G SFPs and 100Base low speed SFPs.
5. SFP+ slots. Supports Avaya's 1G SFPs and 10G SFP+s.
6. Console Port

Electrostatic discharge

This section provides information and procedures to prevent electrostatic discharge during installation.

Preventing electrostatic discharge damage

Electrostatic discharge (ESD) is a discharge of stored static electricity that can damage equipment and impair electrical circuitry. Electrostatic voltages can result from friction including, pulling cabling through conduits, walking across carpeted areas, and building static charge in clothing. When you improperly handle electronic components, ESD damage occurs and can result in complete or intermittent failures. While networking equipment is commonly designed and tested to withstand common mode ESD events, voltage can sometimes discharge to some connector pins, which can potentially damage the networking equipment.

Caution:

To protect the Avaya VSP 4000 against ESD damage, take the following measures before you connect data cables to the device:

- Always use antistatic wrist straps. Make sure you adjust the strap to provide good skin contact.
- Ensure that you properly ground work surfaces and equipment racks for protection against electrostatic discharge. You must connect the common point to the building ground wire. In a properly wired building, the nearest reliable ground is typically at the electrical outlet.
- Avoid contact between equipment and clothing. The wrist or ankle strap protects only the equipment from ESD voltages on the body; ESD voltages on clothing can still cause damage.
- Avoid touching any connector pins.
- Do not remove the wrist or ankle strap until the installation is complete.

Preventing electrostatic damage in new cable installations

With new cable installations, Avaya recommends that you use an ESD discharge cable to reduce the potential for damage from static, that can build up in cables. The following figure illustrates an ESD cable.

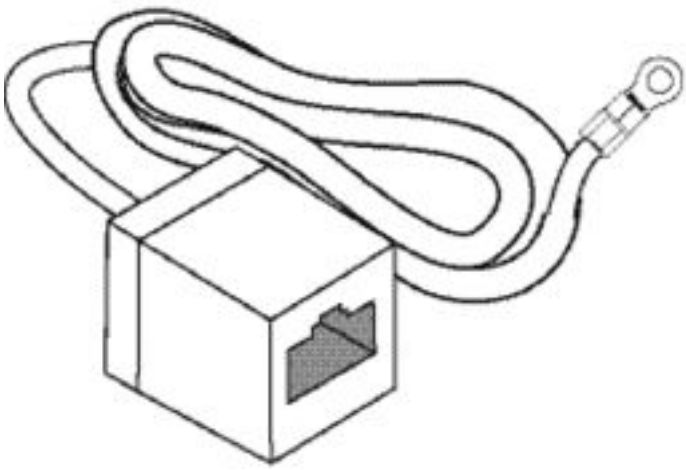

Figure 2: Job aid

To install the ESD discharge cable, perform this procedure.

1. Connect the ground lug on the ESD discharge cable to a safe and suitable earth ground.
2. Connect all RJ-45 cable connectors to the female RJ-45 connector of the ESD discharge cable for at least 5 seconds, and then connect each RJ-45 cable connector to the switch.
3. Leave cables connected to the networking equipment. After you connect cables to networking equipment, the cables do not build up charge.

Environmental requirements

The following table provides the environmental requirements for the individual switches in this series. Ensure that the area where you install the switch and where it operates meets these requirements.

Table 3: Avaya Virtual Services Platform 4000 environmental requirements

Environmental requirement	Avaya Virtual Services Platform 4000 models
Operating Temperature	0°C to 70°C (32°F to 158°F), continuous operation
Storage Temperature	-40°C to 85°C (-40°F to 185°F)
Operating and Storage Humidity	0 to 95 percent noncondensing
Maximum Operating Altitude	3,048m (10 000 feet) above sea level
Altitude	0 to 3,048m (0 to 10,000ft) above sea level
Storage Altitude	0 to 12,192m (0 to 40,000ft) above sea level

Table continues…

Environmental requirement	Avaya Virtual Services Platform 4000 models
Acoustic Noise	Less than or equal to 45 db at 35°C and less than or equal to 57 db at 50°C. The temperature is allowed to have ±3.5°C deviation around the threshold of 35C, (measurement methods based on ISO 7779).
Miscellaneous Operating Considerations	• No heat sources such as hot air vents or direct sunlight near the switch. • No sources of severe electromagnetic interference near the switch. • No excessive dust in the environment. • An adequate power source is within 6 feet (1.83 meters) of the switch. One 15-amp circuit is required for each power supply. • At least 2 inches (5.08 centimeters) of clearance on each side of the switch unit for ventilation. • Adequate clearance at the front and rear of the switch for access to cables.

Warning:

To avoid bodily injury from hazardous electrical shock and current, never remove the top of the device. No user-serviceable components are inside. For a translation of this statement, see Translations of safety messages on page 32.

Airflow direction

The airflow direction in the VSP 4450GTX-HT-PWR+ for the top half of the switch, where the components exist, is from left to right (as viewed from the front). Cool air enters the chassis through an air inlet at the left of the chassis, which cools the device. Warm air exits through the exhaust at the right.

The airflow direction for the bottom half of the VSP 4450GTX-HT-PWR+, where the power supplies exist, is from front to back. The chassis draws in cool air from the front of the chassis, and hot air exits at the rear.

Package contents

The following describes the components that are provided with each switch. If any components are missing, contact the switch vendor.

1. Avaya Virtual Services Platform 4000 4450GTX-HT-PWR+ switch with one power supply installed

2. Rack-mounting hardware that includes:
   - Rack-mount brackets
   - Screws to attach brackets to the switch
   - Screws to attach the switch to the equipment rack
3. Rubber footpads
4. AC power cord with an IEC 60320 C16 connector. (**Note**: A power cord is not included for the A variant of the switch.)
5. Documentation that includes the following:
   a. *Locating the latest software and product release notes for Avaya Virtual Services Platform 4000 Series*, NN46251-106
   b. *Avaya Virtual Services Platform 4000 Series Regulatory Guide*, NN46251-105
   c. *Virtual Services Platform 4000 4450GTX-HT-PWR+ Quick Install Guide*, NN46251–306
   d. The China RoHS paper

Installing the Avaya Virtual Services Platform 4000 on a table or shelf

You can install a single Avaya VSP 4000 switch on any flat surface. The surface must support the combined weight of the switch and attached cables (from 15 and 20 pounds [7 to 9 kilograms]).

To install an Avaya VSP 4000 on a table or shelf, perform this procedure.

1. Attach the included rubber footpads on the bottom of the switch at the locations indicated.

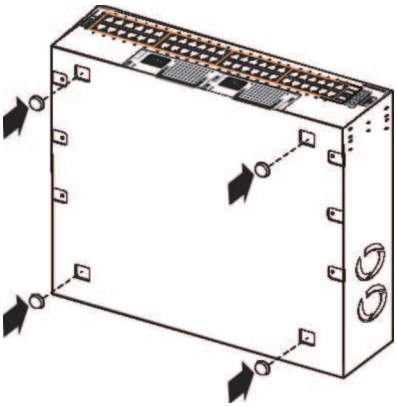

2. Set the switch on a table or shelf as illustrated below. Allow at least 2 inches (5.1 centimeters) on each side for proper ventilation and at least 5 inches (12.7 centimeters) at the back for power cord clearance.

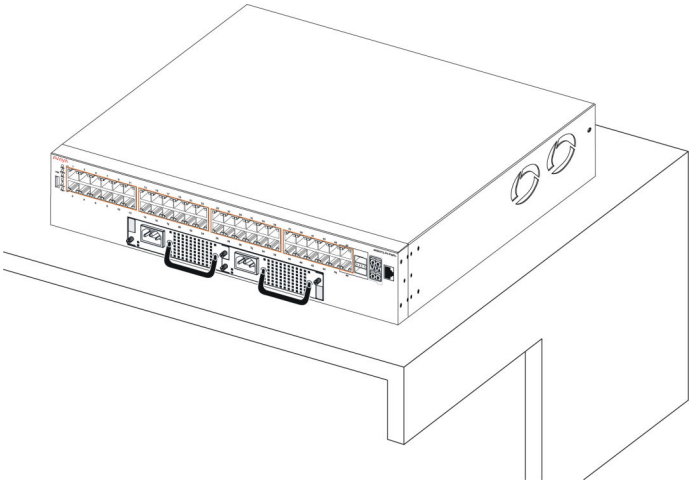

Installing the Avaya Virtual Services Platform 4000 in an equipment rack

To install an Avaya VSP 4000 switch in an equipment rack, perform this procedure.

Prerequisites for installing the Avaya Virtual Services Platform 4000 in an equipment rack:

- Ensure that you have a space of 1.75 inches (4.45 centimeters) in height for each switch in an EIA or IEC-standard 19-inch (48.2-centimeter) equipment rack.
- The rack is bolted to the floor and braced if necessary.
- The rack is grounded to the same grounding electrode used by the power service in the area. The ground path must be permanent and must not exceed 1 Ohm of resistance from the rack to the grounding electrode.

Caution:

When you mount the device in a rack, do not stack units directly on top of one another. You must secure each unit to the rack with the appropriate mounting brackets. Mounting brackets cannot support multiple units. For a translation of this statement, see Translations of safety messages on page 32.

1. Attach the L-bracket to each side of the switch using a #2 Phillips screwdriver as illustrated below.

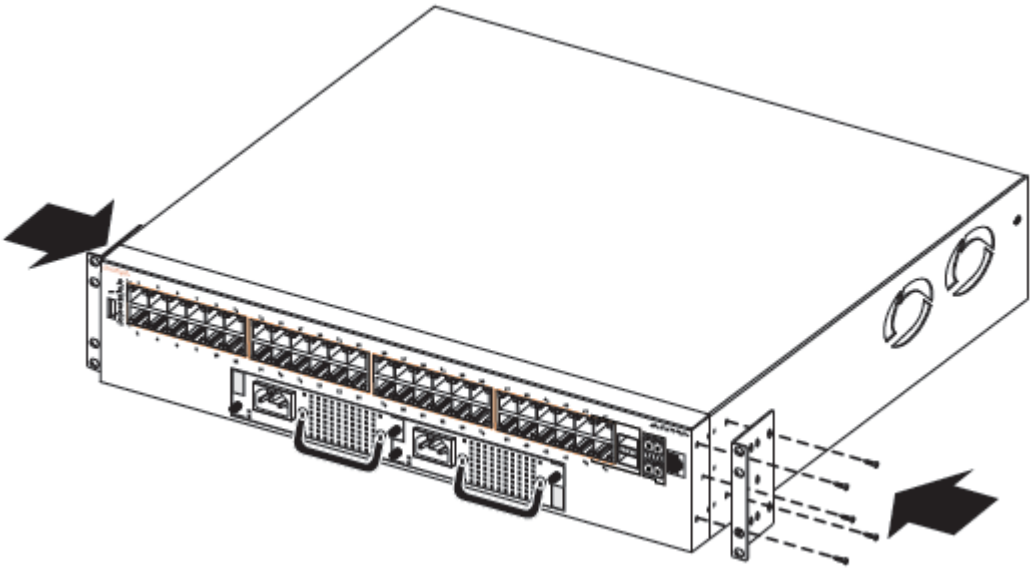

2. Slide the switch into the rack as illustrated.

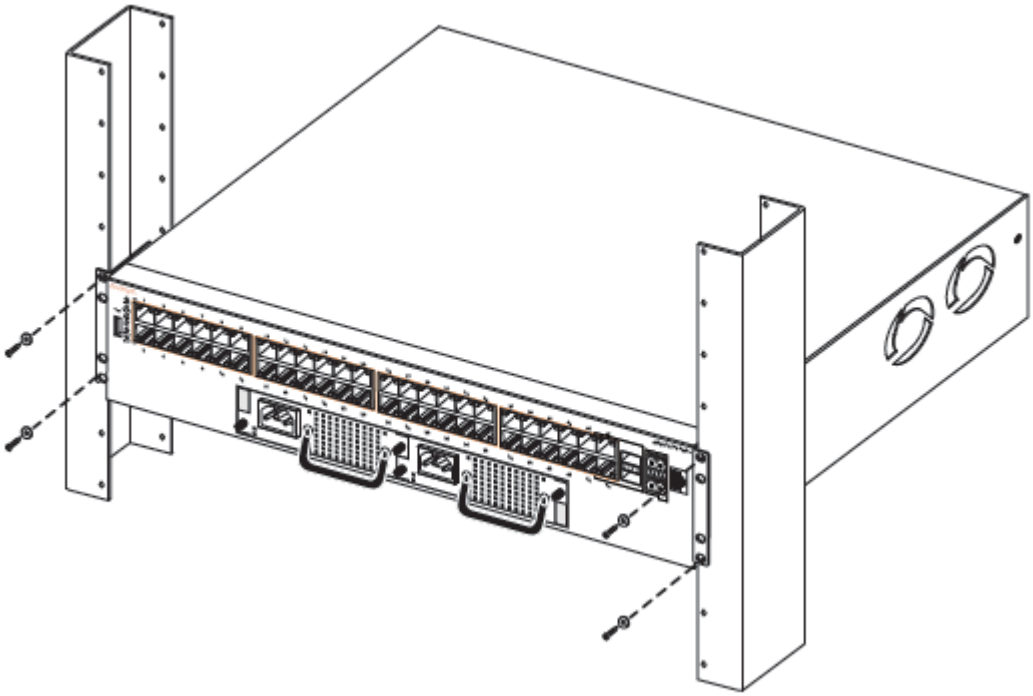

3. Insert and tighten the rack-mount screws.

Cable requirements for the Avaya Virtual Services Platform 4000

The following table describes the cables required for an Avaya Virtual Services Platform 4000 4450GTX-HT-PWR+ switch.

Table 4: Switch cable requirements

Required Cable	Description
10/100/1000Base TX Ports	The interconnect cabling must conform to the Cat5e, Cat6, or Cat6e specification of the Commercial Building Telecommunications Cabling Standard, ANSI/TIA/EIA 568-B fitted with an RJ-45 Module jack.
10/100Base TX Ports	The interconnect cabling for 10BaseT Ethernet must conform to Cat3, Cat4, Cat5 (or better) UTP cabling for distances up to 100 meters. The interconnect cabling for 100BaseTX Fast Ethernet must conform to Cat5 (or better) UTP cabling for distances up to 100 meters.
100BaseFX Ports	The interconnect cabling must conform to 50/125 or 62.5/125 micron multimode fiber-optic cabling for distances up to 3 kilometers.
Console Port	Varies depending on the user device. The VSP 4000 has an RJ-45 female connector, so a serial cable with RJ-45 connectors, or a serial cable with a DB-9 female connector on one end and an RJ-45 on the other is appropriate. The maximum length for the console port cable is 25 feet (8.3 meters).
SFP Transceiver Ports	Varies with the installed SFP transceiver. See the documentation shipped with the SFP transceiver for specifications.
USB Port	The USB port is usable with a USB drive for file transfer of config files, log files and software images.

Installation and removal of Small Form-factor Pluggable (SFP) transceivers

The following section describes how to install and remove Small Form-factor Pluggable (SFP) transceivers in the Avaya Virtual Services Platform 4000 switch. For more information about SFP transceiver use and designation, see *Installing Transceivers and Optical components on the Avaya Virtual Services Platform 4000 Series* (NN46251–301).

Installing SFP transceivers

Install SFP transceivers by performing this procedure.

1. Remove the transceiver from the protective packaging.

2. Verify that the transceiver is the correct model for the network configuration.
3. Grasp the transceiver between your thumb and forefinger.
4. Insert the transceiver into the proper module on the switch. Apply a light pressure to the transceiver until it clicks and locks into position in the module.
5. Remove the dust cover from the transceiver optical bores.

Removing SFP transceivers

Remove SFP transceivers by performing this procedure.

1. Disconnect the network fiber cable from the transceiver.
2. Use the locking mechanism on the transceiver to release it. The locking mechanism varies from model to model as illustrated below.

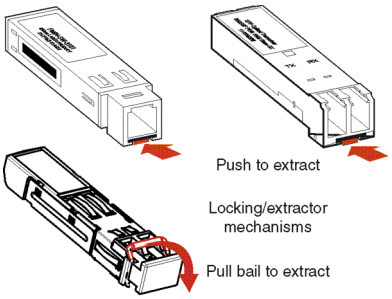

3. Slide the transceiver from the module slot.
4. If the transceiver does not slide easily from the module slot, use a gentle side-to-side rocking motion while firmly pulling the transceiver from the slot.
5. Attach a dust cover over the fiber-optic bores and store the transceiver in a safe place until you need it.

Important:

Discard transceivers in accordance with the proper laws and regulations.

RJ-45 connector pin assignments

The following section describes the connector pin assignments for the RJ-45 connectors in the Avaya Virtual Services Platform 4000.

Console port pin assignments

The following table describes the console port pin assignments in the Avaya VSP 4000.

Important:

Avaya VSP 4000 supports only CLI Quickstart use on the console port.

Table 5: DB–9 Console port pin assignments

Connector	Pin Number	Signal
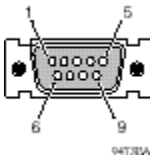	1	Carrier detect (not used)
	2	Transmit Data (TXD)
	3	Receive Data (RXD)
	4	Data terminal ready (not used)
	5	Signal ground (GND)
	6	Not used
	7	Request to send (not used)
	8	Not used
	9	Ring indicator (not used)

Table 6: RJ–45 Console port pin assignments

Connector	Pin Number	Signal
	1	Ready to send (RTS) — optional
	2	Data terminal ready (DTR) — optional, can swap or link with pin 8
	3	Transmit data (TXD) — mandatory
	4	Carrier detect (DCD) — optional
	5	Ground (GND) — mandatory
	6	Receive data (RXD) — mandatory
	7	Data set ready (DSR) — optional
	8	Clear to send (CTS) — optional, can swap or link with pin 1

Power specifications for the Avaya Virtual Services Platform 4000

This section describes power specifications for the Avaya VSP 4000 switches.

Power specifications for Avaya VSP 4000 4450GTX-HT-PWR+ switch

The following table describes the regulatory AC power specifications for the Avaya Virtual Services Platform 4000 Series 4450GTX-HT-PWR+ switch. The regulatory power specifications are based on the maximum rated capacity of the power supplies and are not based on typical power consumption which is lower.

Table 7: AC power specifications

	48450GTX-HT-PWR+
Input Current:	16.66A/8.33A
Input Voltage (rms):	100 to 240VAC at 50 to 60 Hz
Power Consumption:	• Without PoE+ - Typical: 100W - Maximum: 145W • With PoE+ - Typical power utilization depends on the number of ports using PoE+. - Maximum: 553.4W
Thermal Rating:	341.2 BTU/Hr typical and 494.8 BTU/Hr maximum
Inrush Current:	70A maximum
Turn on Condition:	1 second maximum after application of AC power
Efficiency:	70 percent minimum

Avaya Virtual Services Platform power supply power specification

The Avaya Virtual Services Platform 4000 4450GTX-HT-PWR+ supports two external field replaceable power supplies. One power supply ships with the chassis. You can install a secondary power supply to provide redundancy, load sharing, and to add Power over Ethernet Plus (PoE+) power budget on PWR+ models.

1000W AC power supply

VSP 4000 4450GTX-HT-PWR+ supports dual 54V 1000W Power over Ethernet Plus (PoE+) AC power supplies.

Important:

Ensure that you use only 1000W power supplies (both primary and secondary) on VSP 4000 4450GTX-HT-PWR+ models.

Figure 3: 1000W AC power supply

Connector

The 1000W AC power supply uses an IEC 60320 C16 AC power cord connector. The AC power cord is in close proximity to the hot air exhaust, and supports high operating temperatures.

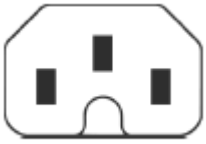

Figure 4: IEC 60320 C16 connector

Power over Ethernet Plus specifications

Table 8: Avaya VSP 4450GTX-HT-PWR+ model

	0°C to 50°C	50°C to 70°C
1 PSU	860W	400W
2 PSU	1660W	832W

Table 9: Avaya VSP 4450GTX-HT-PWR+ model with 1 PSU

	0°C to 50°C	50°C to 70°C
PoE support on	48 ports	23 ports
PoE+ support on	26 ports	13 ports

Table 10: Avaya VSP 4450GTX-HT-PWR+ model with 2 PSUs

	0°C to 50°C	50°C to 70°C
PoE support on	48 ports	48 ports
PoE+ support on	48 ports	26 ports

- VSP 4450GTX-HT-PWR+ can support 802.3af 17.8W or 32.4W on each port with one power supply installed. You can add a second power supply for redundancy.

Installing the Avaya Virtual Services Platform 4000 power supply

You must install at least one power supply before using the switch. Avaya VSP 4000 PWR+ models. Avaya VSP 4000 models support two field replaceable external power supplies. If supported, you can install an optional second power supply for redundancy, load sharing, or to provide additional PoE+ power budget.

Perform the following procedure to install an external power supply into your switch.

Note:

Avaya VSP 4000 hardware can vary. This procedure only applies to hardware models with field replaceable power supplies.

1. If a blanking plate covers the required power supply slot, remove the blanking plate before attempting to insert the power supply.
2. Insert each power supply into a rear power supply slot.
3. Verify that each power supply is fully seated in the slot. Secure the power supply with the two thumb screws.

   Note:

   The switch chassis can prevent an incorrect installation of a power supply. If you insert a power supply upside down, it will not fully insert and the thumb screws will not engage.
4. Once you install a power supply, you can proceed with connecting AC power.

Important:

You can hot swap power supplies while the switch is operational. One power supply is required for continued switch operation. PoE+ load reductions can occur if you remove one power supply while the switch is operating with dual power supplies.

Connect AC power

This section explains power cord specifications and how to connect AC power.

Power cord specifications

To connect AC power to the switch, you need an appropriate AC power cord as described in the following table, also see the following table for plug specifications.

Table 11: International power cord specifications

Country and Plug Specification	Specifications	Typical Plug
Continental Europe: • CEE7 standard VII male plug • Harmonized cord (HAR marking on the outside of the cord jacket to comply with the CENELEC Harmonized Document HD-21)	• 220 or 230VAC • 50 Hz • Single phase	
United States of America, Canada, and Japan: • NEMA5-15P male plug • UL-recognized (UL stamped on cord jacket) • CSA-certified (CSA label secured to the cord)	• 100 or 120VAC • 50–60 Hz • Single phase	
United Kingdom: • BS1363 male plug with fuse • Harmonized cord	• 240VAC • 50 Hz • Single phase	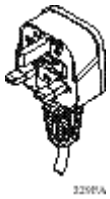
Australia: • AS3112-1981 male plug	• 240VAC • 50 Hz • Single phase	

Danger:

Using power cords with a proper grounding path

Use only power cords that have a grounding path. Without a proper ground, a person who touches the switch is in danger of receiving an electrical shock. Lack of a grounding path to the switch can result in excessive emissions. For a translation of this statement, see Translations of safety messages on page 32.

Connect power to the front panel

Connect the AC power cord to the front of the switch, and then connect the cord to an AC power outlet. The following figure shows how to connect the AC power cord to the switch front panel.

Important:

The Avaya VSP 4000 series has no AC power switch. When you connect the power cord to a suitable, energized AC power outlet, the switch powers up immediately.

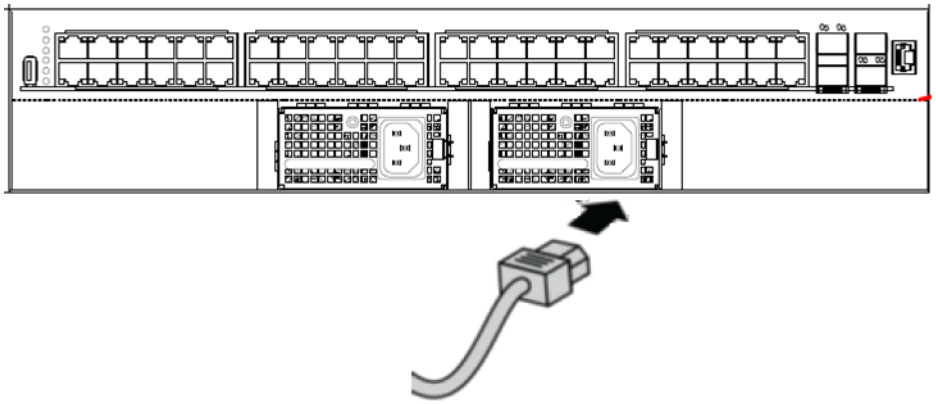

Figure 5: Connecting AC power to the front panel

Warning:

Disconnecting the AC power cord is the only way to turn off AC power to the Avaya VSP 4000. Always connect the AC power cord in a quickly and safely accessible location in case of an emergency. For a translation of this statement, see Translations of safety messages on page 32.

Caution:

Before you unplug the AC power cord, always perform the following shutdown procedure. This procedure flushes any pending data to ensure data integrity.

1. Enter the Privileged EXEC command mode:

   ```
   enable
   ```

2. Shutdown the VSP 4000:

   ```
   sys shutdown
   ```

3. When prompted, enter `y` to confirm system shut down.
4. Before you unplug the power cord, wait until you see the following message:

   ```
   System Halted, OK to turn off power.
   ```

Example

Example

```
VSP-4450GSX-PWR+:1>enable

VSP-4450GSX-PWR+:1#sys shutdown

Are you sure you want shutdown the system? Y/N (y/n) ? y

CP1 [03/24/14 18:39:04.932:UTC] 0x00010813 00000000 GlobalRouter HW INFO
System shutdown initiated from CLI

CP1 [03/24/14 18:39:06.000] LifeCycle: INFO: Stopping all processes

CP1 [03/24/14 18:39:08.000] LifeCycle: INFO: All processes have stopped

CP1 [03/24/14 18:39:08.000] LifeCycle: INFO: All applications shutdown,
starting power down sequence

INIT: Sending processes the TERM signal

Stopping OpenBSD Secure Shell server: sshdno /usr/sbin/sshd found; none
killed

cat: can't open '/proc/mtd': No such file or directory

cat: can't open '/proc/mtd': No such file or directory

Stopping vsp...

mount: no /proc/mounts

mount: can't find /mnt/cfgfs/ in /etc/fstab

/etc/rc0.d/K25vsp: line 441: /mnt/cfgfs/timestamp: Read-only file system

umount: can't open '/proc/mounts'

sed: /proc/mounts: No such file or directory

sed: /proc/mounts: No such file or directory

sed: /proc/mounts: No such file or directory

Deconfiguring network interfaces... done.

Stopping syslogd/klogd: no syslogd found; none killed

Sending all processes the TERM signal...

Sending all processes the KILL signal...

hwclock: can't open '/dev/misc/rtc': No such file or directory

/etc/rc0.d/S25save-rtc.sh: line 5: /etc/timestamp: Read-only file system

Unmounting remote filesystems...

Stopping portmap daemon: portmap.

Deactivating swap...

Unmounting local filesystems...
```

```
[695413.959234] Power down.
[695413.989531] System Halted, OK to turn off power
```

Check Light Emitting Diode (LED) on the Avaya Virtual Services Platform 4000

The figures and tables in the following sections describe the LEDs on the Avaya Virtual Services Platform 4000 switches. The tables describe LED operation for a switch that finishes the power-on self-test.

Front panel LEDs

The following diagram illustrates the components on the front panels of the Avaya VSP 4000 4450GTX-HT-PWR+ switch.

For detailed explanations of the states indicated by each front panel LED type, see the following sections:

- Switch LED state indicators on page 29
- Port LED state indicators on page 30

Figure 6: VSP 4450GTX-HT-PWR+

1. VSP 4000 USB port
2. Switch LEDs
3. 10/100/1000 Base TX RJ-45 ports with PoE+ (LEDs above ports)
4. 100/1000 Mbps SFP transciever modules
5. 1/10G SFP + ports
6. Console Port

Warning:

Fiber optic equipment can emit laser or infrared light that can injure your eyes. Never look into an optical fiber or connector port. Always assume that fiber-optic cables are connected to a light source. For a translation of this statement, see Translations of safety messages on page 32.

Switch LED state indicators

The following figure describes the main switch LED state indications provided by LED color and fluctuation cues.

Note:

Indicator states are applicable to all models of VSP 4000 switches.

Table 12: Switch LED state indicators

Label	Color and Status	Description
PWR	Green (solid)	The switch is receiving power either from the primary or secondary power supply. Normal operation.
	Green (blinking)	System is in reset.
	Off	The switch is not receiving power and not operating.
Status	Green (solid)	• **During start-up:** The power-on self-test (POST) is complete and the switch is operating normally. • **After start-up:** The switch is running the agent code successfully.
	Green (blinking)	The switch is loading the agent software code.
	Amber (solid)	The switch encountered an error when running the diagnostic software.
	Amber (blinking)	The switch is booting and running diagnostic software. Normal activity during boot process.
	Off	The switch failed the power-on self-test (POST) or failed to load the agent code.
RPS	Green (solid)	The switch is connected to a redundant power supply unit (RPS) or a secondary external power supply, and is operating normally.
	Green (blinking)	The switch is connected to a secondary power supply, but the power input is disconnected.
	Amber (solid)	The power supply in slot 1 or slot 2 was removed after operating.
	Amber (blinking)	The power supply in slot 1 or slot 2 is present, but not supplying power to the switch.
	Off	No power to secondary power supply. The switch is not connected to an RPS or secondary power supply. The RPS is not supplying power, or the DC/DC module is not supplying power..

Port LED state indicators

This section describes the port LED state indicators by color and fluctuation cues.

Note:

Indicator states are applicable to the 4450GTX-HT-PWR+ model of VSP 4000 switches.

The following list describes the three port LEDs:

- Activity indicates the level of activity on the link.
- Link indicates the presence of an Ethernet link.
- Speed indicates the port speed (for example, 10 Mb/s, 100 Mb/s, 1000 Mb/s).

Table 13: RJ-45 Port LED state indicators

Label	Color and Status	Description
Speed/PoE+	Green, Blink	The port is set to operate at 1000 Mb/s with PoE.
	Green, Steady	The port is set to operate at 1000 Mb/s without PoE+.
	Amber, Blink	The port is set to operate at 100 Mb/s with PoE+.
	Amber, Steady	The port is set to operate at 100 Mb/s without PoE+.
	Amber, Green Pulse	The port is experiencing a PoE+ error.
	Off	When the Link/Activity LED is green and the Speed LED is off, the port is set to operate at 10 Mb/s for all models.
Link / Activity	Green, Steady	The link established but no data activity exists.
	Green, Blink	The link is established and data activity exists (the blink rate indicates the level of activity).
	Green, Slow Blink	The software disabled the port.
	Amber, Steady	Port disabled.
	Amber, Blink	Port not used.
	Off	Not applicable.

Table 14: SFP/SFP+ transceiver Port LED state indicators

Label	Color and Status	Description
In Use	Green, Blink	Not applicable.
	Green, Steady	The SFP/SFP+ port and the transmit port are active.
	Amber, Blink	Not applicable.
	Amber, Steady	SFP/SFP+ Installed—TX Port Inactive
	Off	No SFP/SFP+ transceiver is present.
Link / Activity	Green, Blink	Activity exists on the port.

Table continues…

Label	Color and Status	Description
	Green, Slow Blink	Software disabled this port.
	Green, Steady	The link is operating normally.
	Off	No link exists.

Note:

If you connect two ports explicitly set for different speeds (for example one configured as 10BaseT and the other as 100BaseTX) the port link LED may indicate a link, but the switch does not establish a link. Connect ports using the same set speed or use auto-negotiation on each switch.

Chapter 5: Translations of safety messages

Caution:

When you mount this device in a rack, do not stack units directly on top of one another. You must secure each unit to the rack with appropriate mounting brackets. Mounting brackets cannot support multiple units.

Important:

Achtung:

Wenn diese Einheit in einem Rack montiert wird, muß ein gewisser Abstand zur nächsten Einheit gelassen werden. Jede Einheit muß mit geeignetem Befestigungsmaterial gesichert werden. Das Befestigungsmaterial ist nicht für die gleichzeitige Befestigung mehrerer Einheiten geeignet.

Important:

Si vous installez le module dans une baie, ne l'empilez pas directement sur un autre. Chaque module doit être fixé à sa propre baie à l'aide des supports de montage appropriés. Ces supports ne sont pas conçus pour résister à plusieurs modules.

Important:

Precautión:

Cuando monte este dispositivo en un bastidor, no apile las unidades directamente una encima de otra. Cada unidad debe fijarse en el bastidor con las abrazaderas de montaje adecuadas. Las abrazaderas de montaje no están diseñadas para sostener varias unidades.

Important:

Se il dispositivo viene installato in un rack, non impilare le unità direttamente una sull'altra. Ogni unità deve essere fissata al rack con le staffe di montaggio appropriate. Le staffe di montaggio non sono state progettate per supportare più unità.

警告：在机架中安装此设备时，请勿将多个部件叠放在机架中。必须用合适的安装托架将各个部件固定在机架中。安装托架无法支撑多个部件。

注意：この装置をラックに設置する場合は、ラック内のユニットを直接積み重ねないようにしてください。各ユニットは専用の取り付けブラケットでラックに固定する必要があります。取り付けブラケットは複数のユニットを支えるようには設計されていません。

注意：在機箱中掛載此裝置時，請不要直接在機箱中的另一個裝置上直接堆放裝置。每一裝置都必須使用適當的掛載托架以固定在機架中。掛載托架不能用來支撐多個裝置。

Caution:

If you are not installing a module in the slot, be sure to keep the metal cover plate in place over the slot. Removing the cover plate impedes airflow and proper cooling of the unit.

Important:

Achtung:

Wenn Sie kein Modul im Schacht verwenden, muß die Metallabdeckung über dem Schacht montiert sein. Eine Entfernung der Abdeckung führt zu einer Verschlechterung der Luftzirkulation und damit zu einer nicht ausreichenden Kühlung der Einheit.

Important:

Si vous n'installez pas le module dans une baie, veillez à laisser la plaque métallique sur la baie. Si vous la retirez, l'aération du module ne peut pas s'effectuer correctement.

Important:

Precaution:

Si no instala ningún módulo en la ranura, asegúrese de mantener la placa de la cubierta de metal en la misma. Si la retira, impedirá que el aire circule y la unidad se refrigere adecuadamente.

Important:

Attenzione:

Se nello slot non vengono installati moduli, assicurarsi di mantenere la piastra di copertura metallica in sede sopra lo slot. La rimozione della piastra impedisce la ventilazione e il corretto raffreddamento dell'unità.

注意：この装置をラックに設置する場合は、ラック内のユニットを直接積み重ねないようにしてください。各ユニットは専用の取り付けブラケットでラックに固定する必要があります。取り付けブラケットは複数のユニットを支えるようには設計されていません。

注意：スロットにモジュールを取り付けない場合は、スロットにある金属製のカバープレートが外れないように注意してください。カバープレートを動かすと気流が妨げられ、適切なユニット冷却が行われなくなります。

注意：如果您未在插槽中安裝模組，請確定金屬殼板正確地蓋在插槽上。移除殼板會阻礙空氣流通以及裝置的適當冷卻度。

警告：如果您不打算在该插槽中安装任何模块，请务必使金属盖板正确地盖住该插槽。如果取下盖板，将妨碍通风及部件散热。

警告：この装置の電源は、電源コードを抜かない限り切断できません。緊急の場合にすばやく安全に切断できる場所に電源コードを接続してください。

警告：若要關閉此裝置的電源，拔掉插頭是唯一的方法。 爲了因應緊急狀況，請將電源線連接到可以快速插拔的地方。

Warning:

Disconnecting the AC power cord is the only way to turn off AC power to this device. Always connect the AC power cord in a quickly and safely accessible location in case of an emergency.

Important:

Warnung:

Das Gerät kann nur durch Ziehen des Netzsteckers ausgeschaltet werden. Schließen Sie das Netzkabel an einer Steckdose an, die in Notfällen schnell und sicher zugänglich ist.

Important:

Avertissement:

Pour mettre le module hors tension, vous devez impérativement déconnecter le cordon d'alimentation. En outre, vous devez dégager un espace minimal dans la zone de câblage pour pouvoir y accéder facilement en cas d'urgence.

警告：断开交流电源线是切断本设备的交流电源的唯一方法。交流电源线一定要连接到在紧急时刻可以快速安全地接触到的位置。

Important:

Advertencia:

Para apagar el dispositivo debe desenchufar el cable. Conecte siempre el cable de alimentación a una toma segura y de fácil acceso por si se produjera alguna situación de emergencia.

Important:

Avviso:

L'unico modo per disattivare questo dispositivo consiste nello scollegare il cavo di alimentazione. Collegare sempre il cavo di alimentazione ad una presa che sia facilmente e rapidamente accessibile in caso di emergenza.

Danger:

Use only power cords that have a grounding path. Without a proper ground, a person who touches the switch is in danger of receiving an electrical shock. Lack of a grounding path to the switch can result in excessive emissions.

Important:

Vorsicht:

Verwenden Sie nur Netzkabel mit Schutzerdung. Ohne ordnungsgemäße Schutzerdung besteht für Personen, die den Switch berühren, die Gefahr eines elektrischen Schlages. Eine nichtvorhandene Schutzerdung kann zu sehr starken Abstrahlungen führen.

Danger:

N'utilisez que des cordons d'alimentation équipés de trajet de mise à la terre. Sans mise à la terre adaptée, vous risquez de recevoir une décharge électrique en touchant le commutateur. Par ailleurs, l'absence de trajet de mise à la terre peut générer des émissions excessives.

Important:

Peligro:

Utilice únicamente cables de alimentación con toma de tierra. De lo contrario, al tocar el interruptor puede recibir una descarga eléctrica. Si no hay un circuito de toma de tierra en el enchufe, puede producirse un exceso de emisiones.

Important:

Pericolo:

Utilizzare esclusivamente cavi di alimentazione dotati di un percorso per la messa a terra. Senza un'adeguata messa a terra, chiunque tocchi lo switch corre il rischio di ricevere una scossa elettrica. L'assenza di un percorso per la messa a terra verso lo switch può comportare un eccesso di emissioni.

危険：接地経路を持つ電源コードを必ず使用するようにしてください。適切な接地がない状態でスイッチに触ると、感電する危険性があります。また、スイッチへの接地経路がないと、過度な放電を引き起こす可能性があります。

危险：请仅使用接地的电源线。如果电源线不接地或接地不当，接触交换机的人员可能会受到电击。如果交换机不接地，则可能导致放电过量。

Warning:

The lithium battery is not field replaceable. It must only be removed and replaced by authorized personnel. Contact Avaya Technical Support for assistance if the battery requires replacement.

Important:

Warnung:

Die Lithiumbatterie kann nicht vor Ort ausgetauscht werden. Die Batterie darf nur von entsprechend befugtem Personal entfernt und ausgetauscht werden. Muss die Batterie ersetzt werden, wenden Sie sich bitte an den Technischen Support von Avaya.

Important:

Avertissement:

La batterie au lithium n'est pas remplaçable sur site. Elle ne peut être enlevée et remplacée que par du personnel qualifié. Veuillez prendre contact avec le support technique d'Avaya si la batterie doit être remplacée.

Important:

警告:

□□池不支持□□更□， 只有授□人□才能□行拆卸和更□。 如果您需要更□□池，□□系 Avaya 技□支持部□□求帮助。

Important:

Advertencia:

La batería de litio no puede sustituirse en campo. La extracción y sustitución debe ser realizada exclusivamente por personal autorizado. Comuníquese con el Soporte técnico de Avaya si necesita asistencia para cambiar la batería.

Important:

Aviso:

A bateria de lítio não é substituível em campo. Só deve ser removida e substituída por pessoal autorizado. Entre em contato com o Suporte Técnico da Avaya para obter assistência, se a bateria precisar de substituição.

Important:

Предупреждение:

Литиевые аккумуляторы не подлежат самостоятельной замене в условиях эксплуатации. Их может извлекать и заменять только аттестованный персонал. Если требуется замена аккумулятора, обратитесь в службу технической поддержки Avaya.