Installing Avaya Ethernet Routing Switch 4000 Series

Release 5.7
NN47205-300
Issue 06.02
November 2013

© 2013 Avaya Inc.

All Rights Reserved.

Notice

While reasonable efforts have been made to ensure that the information in this document is complete and accurate at the time of printing, Avaya assumes no liability for any errors. Avaya reserves the right to make changes and corrections to the information in this document without the obligation to notify any person or organization of such changes.

Documentation disclaimer

“Documentation” means information published by Avaya in varying mediums which may include product information, operating instructions and performance specifications that Avaya generally makes available to users of its products. Documentation does not include marketing materials. Avaya shall not be responsible for any modifications, additions, or deletions to the original published version of documentation unless such modifications, additions, or deletions were performed by Avaya. End User agrees to indemnify and hold harmless Avaya, Avaya's agents, servants and employees against all claims, lawsuits, demands and judgments arising out of, or in connection with, subsequent modifications, additions or deletions to this documentation, to the extent made by End User.

Link disclaimer

Avaya is not responsible for the contents or reliability of any linked websites referenced within this site or documentation provided by Avaya. Avaya is not responsible for the accuracy of any information, statement or content provided on these sites and does not necessarily endorse the products, services, or information described or offered within them. Avaya does not guarantee that these links will work all the time and has no control over the availability of the linked pages.

Warranty

Avaya provides a limited warranty on its hardware and Software (“Product(s)”). Refer to your sales agreement to establish the terms of the limited warranty. In addition, Avaya’s standard warranty language, as well as information regarding support for this Product while under warranty is available to Avaya customers and other parties through the Avaya Support website: http://support.avaya.com. Please note that if you acquired the Product(s) from an authorized Avaya Channel Partner outside of the United States and Canada, the warranty is provided to you by said Avaya Channel Partner and not by Avaya. “Software” means computer programs in object code, provided by Avaya or an Avaya Channel Partner, whether as stand-alone products or pre-installed on hardware products, and any upgrades, updates, bug fixes, or modified versions.

Licenses

THE SOFTWARE LICENSE TERMS AVAILABLE ON THE AVAYA WEBSITE, HTTP://SUPPORT.AVAYA.COM/LICENSEINFO ARE APPLICABLE TO ANYONE WHO DOWNLOADS, USES AND/OR INSTALLS AVAYA SOFTWARE, PURCHASED FROM AVAYA INC., ANY AVAYA AFFILIATE, OR AN AUTHORIZED AVAYA CHANNEL PARTNER (AS APPLICABLE) UNDER A COMMERCIAL AGREEMENT WITH AVAYA OR AN AUTHORIZED AVAYA CHANNEL PARTNER. UNLESS OTHERWISE AGREED TO BY AVAYA IN WRITING, AVAYA DOES NOT EXTEND THIS LICENSE IF THE SOFTWARE WAS OBTAINED FROM ANYONE OTHER THAN AVAYA, AN AVAYA AFFILIATE OR AN AVAYA AUTHORIZED AVAYA CHANNEL PARTNER; AVAYA RESERVES THE RIGHT TO TAKE LEGAL ACTION AGAINST YOU AND ANYONE ELSE USING OR SELLING THE SOFTWARE WITHOUT A LICENSE. BY INSTALLING, DOWNLOADING OR USING THE SOFTWARE, OR AUTHORIZING OTHERS TO DO SO, YOU, ON BEHALF OF YOURSELF AND THE ENTITY FOR WHOM YOU ARE INSTALLING, DOWNLOADING OR USING THE SOFTWARE (HEREINAFTER REFERRED TO INTERCHANGEABLY AS “YOU” AND “END USER”), AGREE TO THESE TERMS AND CONDITIONS AND CREATE A BINDING CONTRACT BETWEEN YOU AND AVAYA INC. OR THE APPLICABLE AVAYA AFFILIATE (“AVAYA”).

Avaya grants you a license within the scope of the license types described below, with the exception of Heritage Nortel Software, for which the scope of the license is detailed below. Where the order documentation does not expressly identify a license type, the applicable license will be a Designated System License. The applicable number of licenses and units of capacity for which the license is granted will be one (1), unless a different number of licenses or units of capacity is specified in the documentation or other materials available to you. “Designated Processor” means a single stand-alone computing device. “Server” means a Designated Processor that hosts a software application to be accessed by multiple users.

Licence types

Designated System(s) License (DS). End User may install and use each copy of the Software only on a number of Designated Processors up to the number indicated in the order. Avaya may require the Designated Processor(s) to be identified in the order by type, serial number, feature key, location or other specific designation, or to be provided by End User to Avaya through electronic means established by Avaya specifically for this purpose.

Heritage Nortel Software

“Heritage Nortel Software” means the software that was acquired by Avaya as part of its purchase of the Nortel Enterprise Solutions Business in December 2009. The Heritage Nortel Software currently available for license from Avaya is the software contained within the list of Heritage Nortel Products located at http://support.avaya.com/LicenseInfo under the link “Heritage Nortel Products”. For Heritage Nortel Software, Avaya grants Customer a license to use Heritage Nortel Software provided hereunder solely to the extent of the authorized activation or authorized usage level, solely for the purpose specified in the Documentation, and solely as embedded in, for execution on, or (in the event the applicable Documentation permits installation on non-Avaya equipment) for communication with Avaya equipment. Charges for Heritage Nortel Software may be based on extent of activation or use authorized as specified in an order or invoice.

Copyright

Except where expressly stated otherwise, no use should be made of materials on this site, the Documentation, Software, or hardware provided by Avaya. All content on this site, the documentation and the Product provided by Avaya including the selection, arrangement and design of the content is owned either by Avaya or its licensors and is protected by copyright and other intellectual property laws including the sui generis rights relating to the protection of databases. You may not modify, copy, reproduce, republish, upload, post, transmit or distribute in any way any content, in whole or in part, including any code and software unless expressly authorized by Avaya. Unauthorized reproduction, transmission, dissemination, storage, and or use without the express written consent of Avaya can be a criminal, as well as a civil offense under the applicable law.

Third Party Components

“Third Party Components” mean certain software programs or portions thereof included in the Software that may contain software (including open source software) distributed under third party agreements (“Third Party Components”), which contain terms regarding the rights to use certain portions of the Software (“Third Party Terms”). Information regarding distributed Linux OS source code (for those Products that have distributed Linux OS source code) and identifying the copyright holders of the Third Party Components and the Third Party Terms that apply is available in the Documentation or on Avaya’s website at: http://support.avaya.com/Copyright. You agree to the Third Party Terms for any such Third Party Components.

Preventing Toll Fraud

“Toll Fraud” is the unauthorized use of your telecommunications system by an unauthorized party (for example, a person who is not a corporate employee, agent, subcontractor, or is not working on your

company's behalf). Be aware that there can be a risk of Toll Fraud associated with your system and that, if Toll Fraud occurs, it can result in substantial additional charges for your telecommunications services.

Avaya Toll Fraud intervention

If you suspect that you are being victimized by Toll Fraud and you need technical assistance or support, call Technical Service Center Toll Fraud Intervention Hotline at +1-800-643-2353 for the United States and Canada. For additional support telephone numbers, see the Avaya Support website: http://support.avaya.com. Suspected security vulnerabilities with Avaya products should be reported to Avaya by sending mail to: securityalerts@avaya.com.

Trademarks

The trademarks, logos and service marks ("Marks") displayed in this site, the Documentation and Product(s) provided by Avaya are the registered or unregistered Marks of Avaya, its affiliates, or other third parties. Users are not permitted to use such Marks without prior written consent from Avaya or such third party which may own the Mark. Nothing contained in this site, the Documentation and Product(s) should be construed as granting, by implication, estoppel, or otherwise, any license or right in and to the Marks without the express written permission of Avaya or the applicable third party.

Avaya is a registered trademark of Avaya Inc.

All non-Avaya trademarks are the property of their respective owners. Linux® is the registered trademark of Linus Torvalds in the U.S. and other countries.

Downloading Documentation

For the most current versions of Documentation, see the Avaya Support website: http://support.avaya.com.

Contact Avaya Support

See the Avaya Support website: http://support.avaya.com for product notices and articles, or to report a problem with your Avaya product. For a list of support telephone numbers and contact addresses, go to the Avaya Support website: http://support.avaya.com, scroll to the bottom of the page, and select Contact Avaya Support.

Contents

Chapter 1: Introduction ... 7
- Purpose ... 7
- Avaya Ethernet Routing Switch 4000 Series ... 7
- Related resources ... 9
- Support ... 11

Chapter 2: New in this release ... 13
- Features ... 13

Chapter 3: Avaya Ethernet Routing Switch 4000 regulatory information and safety precautions ... 15
- International regulatory statements of conformity ... 15
- Russia Belarus and Kazakhstan Requirement ... 15
- National electromagnetic compliance (EMC) statements of compliance ... 16
- FCC statement (USA only) ... 16
- ICES statement (Canada only) ... 16
- CE marking statement (Europe only) ... 17
- European Union and European Free Trade Association (EFTA) notice ... 17
- VCCI statement (Japan/Nippon only) ... 18
- BSMI statement (Taiwan only) ... 18
- Chinese EMI and safety warnings ... 18
- MIC notice (Republic of Korea only) ... 19
- National Safety Statements of Compliance ... 20
- EN 60950 statement ... 20
- NOM statement (Mexico only) ... 20
- Información NOM (unicamente para México) ... 21
- Denan statement (Japan/Nippon only) ... 22
- National Environmental Statements of Compliance ... 22
- Restriction on Hazardous Substances Directive Compliance Statement ... 22
- WEEE Directive Compliance Statement ... 23

Chapter 4: Installing the Avaya Ethernet Routing Switch ... 25
- Electrostatic discharge ... 25
- Environmental requirements ... 26
- Package contents ... 28
- Installing the Avaya Ethernet Routing Switch 4000 Series on a table or shelf ... 29
- Installing the Avaya Ethernet Routing Switch 4000 Series in an equipment rack ... 30
- Cable requirements for the Avaya Ethernet Routing Switch 4000 Series ... 32
- Installation and removal of Small Form-factor Pluggable (SFP) transceivers ... 33
- RJ-45 connector pin assignments ... 35
- Console port pin assignments ... 39
- Universal Serial Bus (USB) ports ... 40
- Power specifications for the Avaya Ethernet Routing Switch 4000 Series ... 41
- Avaya Ethernet Routing Switch Redundant Power Supply 15 power specification ... 44
- Avaya Ethernet Routing Switch Power over Ethernet Plus power supply power specification ... 44
- Installing the Avaya Ethernet Routing Switch 4000 Series power supply ... 46
- Connect AC power ... 47

Check Light Emitting Diode (LED) on the Avaya Ethernet Routing Switch 4000 Series..... 49
Set IP parameters for the Avaya Ethernet Routing Switch 4000 Series..... 61
Set IP parameters using IP.CFG file on a USB memory device..... 64
Set IP parameters using bootp..... 67
Setting IP parameters using the Web-based Management Interface..... 68
Avaya Ethernet Routing Switch 4000 series stacking..... 69
Stack connector..... 69
Stack configurations..... 74
Chapter 5: Translations of safety messages..... 79
Index..... 83

Chapter 1: Introduction

Purpose

This document provides conceptual information and installation procedures for Avaya Ethernet Routing Switch 4000 Series hardware.

Avaya Ethernet Routing Switch 4000 Series

The following table describes the 4000 Series of Avaya Ethernet Routing Switches.

Table 1: 4000 Series Switch Platforms

4000 Series Switch Model	Key Features
Avaya Ethernet Routing Switch 4526FX	24 100BaseFX ports (MTRJ connector), plus 2 10/100/1000 SFP combo ports Redundant power slot for DC/DC converter installation.
Avaya Ethernet Routing Switch 4526T	24 10/100BaseTX RJ-45 ports, plus 2 10/100/1000/SFP combo ports Redundant power slot for DC/DC converter installation.
Avaya Ethernet Routing Switch 4526T–PWR	24 10/100BaseTX RJ-45 ports with PoE, plus 2 10/100/1000/SFP combo ports Integrated redundant power connector for RPS 15 cable Connection.
Avaya Ethernet Routing Switch 4526T–PWR+	24 10/100BaseTX RJ-45 ports with PoE+, plus 2 10/100/1000/SFP combo ports Supports dual 1000W 54V power supplies for redundancy and load sharing
Avaya Ethernet Routing Switch 4550T	48 10/100BaseTX RJ-45 ports, plus 2 10/100/1000 SFP combo ports Redundant power slot for DC/DC converter installation.

4000 Series Switch Model	Key Features
Avaya Ethernet Routing Switch 4550T–PWR	48 10/100BaseTX RJ-45 ports with PoE, plus 2 10/100/1000 SFP combo ports Integrated redundant power connector for RPS15 cable connection.
Avaya Ethernet Routing Switch 4550T-PWR+	48 10/100BaseTx RJ-45 ports with PoE+, plus 2 10/100/1000/SFP combo ports Supports dual 1000W 54V power supplies for redundancy and load sharing
Avaya Ethernet Routing Switch 4524GT	24 10/100/1000Base TX RJ-45 ports and 4 shared SFP ports Redundant power slot for DC/DC converter installation.
Avaya Ethernet Routing Switch 4524GT-PWR	24 10/100/1000BaseTX RJ-45 ports with PoE and 4 shared SFP ports Integrated redundant power connector for RPS 15 cable connection.
Avaya Ethernet Routing Switch 4526GTX	24 10/100/1000BaseTX RJ-45 ports and 4 shared SFP ports plus 2 10GE XFP slots Redundant power slot for DC/DC converter installation.
Avaya Ethernet Routing Switch 4526GTX–PWR	24 10/100/1000BaseTX RJ-45 ports with PoE and 4 shared SFP ports plus 2 10GE XFP slots Integrated redundant power connector for RPS 15 cable Connection.
Avaya Ethernet Routing Switch 4548GT	48 10/100/1000BaseTX RJ-45 ports and 4 shared SFP ports Redundant power slot for DC/DC converter installation.
Avaya Ethernet Routing Switch 4548GT–PWR	48 10/100/1000BaseTX RJ-45 with PoE and 4 shared SFP ports Integrated redundant power connector for RPS15 cable connection.
Avaya Ethernet Routing Switch 4826GTS	24 10/100/1000BaseTX RJ-45 ports, 2 shared SFP ports, and 2 10GE SFP+ ports Supports dual 300W 12V power supplies for redundancy and load sharing
Avaya Ethernet Routing Switch 4826GTS-PWR+	24 10/100/1000BaseTX RJ-45 ports with PoE+, 2 shared SFP ports, and 2 10GE SFP+ ports Supports dual 1000W 54V power supplies for redundancy and load sharing
Avaya Ethernet Routing Switch 4850GTS	48 10/100/1000BaseTX RJ-45 ports, 2 shared SFP ports, and 2 10GE SFP+ ports Supports dual 300W 12V power supplies for redundancy and load sharing

4000 Series Switch Model	Key Features
Avaya Ethernet Routing Switch 4850GTS-PWR+	48 10/100/1000BaseTX RJ-45 ports with PoE+, 2 shared SFP ports, and 2 10GE SFP+ ports Supports dual 1000W 54V power supplies for redundancy and load sharing

Related resources

Documentation

For a list of the documentation for this product, see *Documentation Reference for Avaya Ethernet Routing Switch 4000 Series*, NN47205–101.

Training

Ongoing product training is available. For more information or to register, see http://avaya-learning.com/.

Enter the course code in the **Search** field and click **Go** to search for the course.

Course code	Course title
8D00020E	Stackable ERS and VSP Products Virtual Campus Offering

Avaya Mentor videos

Avaya Mentor videos are available to provide technical content on how to install, configure, and troubleshoot Avaya products.

Videos are available on the Avaya support site, listed under the video document type, and on the Avaya-run channel on YouTube.

To find videos on the Avaya support site, select the product name, and check the *videos* checkbox to see a list of available videos.

Note:

Videos are not available for all products.

To find the Avaya Mentor videos on YouTube, go to http://www.youtube.com/AvayaMentor and perform one of the following actions:

- Enter a key word or key words in the Search Channel to search for a specific product or topic.
- Scroll down Playlists, and click the name of a topic to see the available list of videos posted on the site.

Searching a document collection

On the Avaya Support website, you can download the documentation library for a specific product and software release to perform searches across an entire document collection. For example, you can perform a single, simultaneous search across the collection to quickly find all occurrences of a particular feature. Use this procedure to perform an index search of your documentation collection.

Before you begin

- Download the documentation collection zip file to your local computer.
- You must have Adobe Acrobat or Adobe Reader installed on your computer.

Procedure

1. Extract the document collection zip file into a folder.
2. Navigate to the folder that contains the extracted files and open the file named <*product_name_release*>.pdx, for example, ers4000_5.7x.pdx.
3. In the Search dialog box, select the option **In the index named <*product_name_release*>.pdx**.
4. Enter a search word or phrase.
5. Select any of the following to narrow your search:
   - Whole words only
   - Case-Sensitive
   - Include Bookmarks
   - Include Comments
6. Click **Search**.
   The search results show the number of documents and instances found. You can sort the search results by Relevance Ranking, Date Modified, Filename, or Location. The default is Relevance ranking.

Support

Visit the Avaya Support website at http://support.avaya.com for the most up-to-date documentation, product notices, and knowledge articles. You can also search for release notes, downloads, and resolutions to issues. Use the online service request system to create a service request. Chat with live agents to get answers to questions, or request an agent to connect you to a support team if an issue requires additional expertise.

Chapter 2: New in this release

The following sections detail what's new in this document for ERS 4000 Series Release 5.7

Features

There are no changes in this document.

Chapter 3: Avaya Ethernet Routing Switch 4000 regulatory information and safety precautions

International regulatory statements of conformity

This is to certify that the Avaya Ethernet Routing Switch 4000 Series was evaluated to the international regulatory standards for electromagnetic compliance (EMC) and safety and were found to have met the requirements for the following international standards:

- EMC - Electromagnetic Emissions - CISPR 22, Class A
- EMC - Electromagnetic Immunity - CISPR 24
- Electrical Safety - IEC 60950, with CB member national deviations

Further, the equipment has been certified as compliant with the national standards as detailed below.

Russia Belarus and Kazakhstan Requirement

В целях соблюдения действующего законодательства, продукты Компании Авайя, которые поставляются в Россию, Белоруссию и Казахстан, поставляются с конфигурацией, которая соответствует текущим требованиям нормативных актов. Любые изменения предустановленного программного обеспечения или прошивки программно-аппаратного комплекса, включая установку иной прошивки, запрещаются, а в случае таких изменений, лицо или компания их осуществившие несут ответственность на свой страх и риск. Компания Авайя не несет ответственности за внесение каких-либо изменений в продукт, произведенный на или для использования на территории России, Белоруссии и Казахстана, кроме модификаций, которые выполнены и сертифицированы Компанией Авайя.

In order to comply with existing laws, Avaya's products that are supplied to Russia, Belarus, and Kazakhstan are supplied with a configuration which is in line with existing legislation. Modifications may lead to product certifications becoming invalid. Any modification of preinstalled software and firmware, including installation of other or more current firmware or software, therefore is done at the responsibility of the person or company executing the changes. Avaya is not responsible for any modifications to the product made on or for use on the territory of Russia, Belarus and Kazakhstan other than modifications executed and certified by Avaya itself.

National electromagnetic compliance (EMC) statements of compliance

FCC statement (USA only)

This equipment has been tested and found to comply with the limits for a Class A digital device, pursuant to Part 15 of the Federal Communications Commission (FCC) rules. These limits are designed to provide reasonable protection against harmful interference when the equipment is operated in a commercial environment. This equipment generates, uses, and can radiate radio frequency energy. If it is not installed and used in accordance with the instruction manual, it may cause harmful interference to radio communications. Operation of this equipment in a residential area is likely to cause harmful interference, in which case users will be required to take whatever measures may be necessary to correct the interference at their own expense.

ICES statement (Canada only)

Canadian Department of Communications Radio Interference Regulations

This digital apparatus (Avaya Ethernet Routing Switch 4000 Series) does not exceed the Class A limits for radio-noise emissions from digital apparatus as set out in the Radio Interference Regulations of the Canadian Department of Communications.

Règlement sur le brouillage radioélectrique du ministère des Communications

Cet appareil numérique (Avaya Ethernet Routing Switch 4000 Series) respecte les limites de bruits radioélectriques visant les appareils numériques de classe A prescrites dans le Règlement sur le brouillage radioélectrique du ministère des Communications du Canada.

CE marking statement (Europe only)

EN 55022 statement

This is to certify that the Avaya Ethernet Routing Switch 4000 Series equipment is shielded against the generation of radio interference in accordance with the application of Council Directive 89/336/EEC. Conformity is declared by the application of EN 55022 Class A (CISPR 22).

EN 55024 statement

This is to certify that the Avaya Ethernet Routing Switch 4000 Series are shielded against the susceptibility to radio interference in accordance with the application of Council Directive 89/336/EEC. Conformity is declared by the application of EN 55024 (CISPR 24).

EN 300386 statement

The Avaya Ethernet Routing Switch 4000 Series complies with the requirements of EN 300386 V1.3.1 for emissions and for immunity for a Class A device intended for use in either Telecommunications centre or locations other than telecommunications centres given the performance criteria as specified by the manufacturer.

European Union and European Free Trade Association (EFTA) notice

CE

All products labeled with the CE marking comply with R&TTE Directive (1995/5/EEC) which includes the Electromagnetic Compliance (EMC) Directive (89/336/EEC) and the Low Voltage Directive (73/336/EEC) issued by the Commission of the European Community.

Compliance with these directives implies conformity to the following European Norms (ENs). The equivalent international standards are listed in parenthesis.

- EN 55022 (CISPR 22)–Electromagnetic Interference
- EN 55024 (IEC 61000-4-2, -3, -4, -5, -6, -8, -11)–Electromagnetic Immunity
- EN 61000-3-2 (IEC 610000-3-2)–Power Line Harmonics
- EN 61000-3-3 (IEC 610000-3-3)–Power Line Flicker

VCCI statement (Japan/Nippon only)

This is a Class A product based on the standard of the Voluntary Control Council for Interference (VCCI) for information technology equipment. If this equipment is used in a domestic environment, radio disturbance may arise. When such trouble occurs, the user may be required to take corrective actions.

この装置は、情報処理装置等電波障害自主規制協議会（ＶＣＣＩ）の基準に基づくクラスＡ情報技術装置です。この装置を家庭環境で使用すると電波妨害を引き起こすことがあります。この場合には使用者が適切な対策を講ずるよう要求されることがあります。

BSMI statement (Taiwan only)

This is a Class A product based on the standard of the Bureau of Standards, Metrology and Inspection (BSMI) CNS 13438 and CNS 14336–1, Class A.

警告使用者:
這是甲類的資訊產品，在居住的環境中使用時，可能會造成射頻干擾，在這種情況下，使用者會被要求採取某些適當的對策。

Chinese EMI and safety warnings

Voltage:

Risk of injury by electric shock

Before working on this equipment, be aware of good safety practices and the hazards involved with electrical circuits. Use only power cords that have a good grounding path. Ensure that the switch is properly grounded before powering on the unit.

電壓警告:
觸電受傷的危險性
在此設備上進行作業之前，要認知到良好的安全行為和涉及電子電路可能的危害。使用的電源線需有接地路徑。確保供電給設備之前，有適當的接地。

Warning:

Disconnecting the power cord is the only way to turn off power to this device. Always connect the power cord in a location that can be reached quickly and safely in case of emergency.

警告使用者:
斷開電源線，是關閉該設備電源的唯一方法。始終確保連接電源線的位置，在緊急情況下，是可以快速且安全抵達的一個位置。

Electrostatic alert:

Risk of equipment damage

To prevent damage from electrostatic discharge, always wear an antistatic wrist strap connected to an ESD jack when connecting cables or performing maintenance on this device.

靜電提醒：
設備損壞的風險
為了防止靜電放電的破壞，在此設備上連接纜線或執行維護時，始終戴上防靜電腕帶並連接到ESD插孔。

MIC notice (Republic of Korea only)

This device has been approved for use in Business applications only per the Class A requirements of the Republic of Korea Ministry of Information and Communications (MIC). This device may not be sold for use in a non-business application.

Observe the Regulatory Marking label on the back or bottom of each switch for specific certification information pertaining to this model. Each Avaya Ethernet Routing Switch 4000 Series model is approved for shipment to/usage in Korea and is labeled as such, with all appropriate text and the appropriate MIC reference number.

National Safety Statements of Compliance

EN 60950 statement

This is to certify that the Avaya Ethernet Routing Switch 4000 Series equipment is in compliance with the requirements of EN 60950 in accordance with the Low Voltage Directive. Additional national differences for all European Union countries have been evaluated for compliance.

NOM statement (Mexico only)

The following information is provided on the devices described in this document in compliance with the safety requirements of the Norma Oficial Méxicana (NOM):

Exporter:	Avaya Inc. 4655 Great America Parkway Santa Clara CA 95054 USA
Importer:	Avaya Communication de México, S.A. de C.V. Av. Presidente Masarik 111 Piso 6 Col Chapultepec Morales Deleg. Miguel HIdalgo México D.F. 11570
Input:	Avaya Ethernet Routing Switch 4000 Series: • 4548GT-PWR 100-240 VAC 6.5A MAX 50-60 Hz • 4550T-PWR 100-240 VAC 6.5A MAX 50-60 Hz • 4548GT 100-240 VAC 3A MAX 50-60 Hz • 4550T 100-240 VAC 3A MAX 50-60 Hz • 4526FX 100-240 VAC 3A MAX 50-60 Hz • 4526T 100-240 VAC 3A MAX 50-60 Hz

- 4526T-PWR 100-240 VAC 6.5A MAX 50-60 Hz
- 4526GTX 100-240 VAC 3A MAX 50-60 Hz
- 4526GTX-PWR 100-240 VAC 6.5A MAX 50-60 Hz
- 4524GT 100-240 VAC 3 A MAX 50-60 Hz
- 4524GT-PWR 100-240 VAC 3 A MAX 50-60 Hz
- 4550T-PWR+ 100–240 VAC 12 A MAX 50–60 Hz
- 4526T-PWR+ 100–240 VAC 12 A MAX 50–60 Hz
- 4850GTS 100–240 VAC 5 A MAX 50–60 Hz
- 4850GTS-PWR+ 100–240 VAC 12 A MAX 50–60 Hz
- 4826GTS 100–240 VAC 5 A MAX 50–60 Hz
- 4826GTS-PWR+ 100–240 VAC 12 A MAX 50–60 Hz

Información NOM (unicamente para México)

La información siguiente se proporciona en el dispositivo o en los dispositivos descritos en este documento, en cumplimiento con los requisitos de la Norma Oficial Méxicana (NOM):

Exportador: Avaya Inc.
4655 Great America Parkway
Santa Clara, CA 95054 USA

Importador: Avaya Communication de México, S.A. de C.V.
Av. Presidente Masarik 111
Piso 6
Col Chapultepec Morales
Deleg. Miguel HIdalgo
México D.F. 11570

Embarcar a: Avaya Ethernet Routing Switch 4000 Series

- 4548GT-PWR 100-240 VAC 6,5A 50-60 Hz
- 4550T-PWR 100-240 VAC 6,5A 50-60 Hz
- 4548GT 100-240 VAC 3A 50-60 Hz
- 4550T 100-240 VAC 3A 50-60 Hz
- 4526FX 100-240 VAC 3A 50-60 Hz
- 4526T 100-240 VAC 3A MAX 50-60 Hz
- 4526T-PWR 100-240 VAC 6.5A MAX 50-60 Hz
- 4526GTX 100-240 VAC 3A MAX 50-60 Hz
- 4526GTX-PWR 100-240 VAC 6.5A MAX 50-60 Hz

- 4524GT 100-240 VAC 3 A MAX 50-60 Hz
- 4524GT-PWR 100-240 VAC 3 A MAX 50-60 Hz
- 4550T-PWR+ 100–240 VAC 12 A MAX 50–60 Hz
- 4526T-PWR+ 100–240 VAC 12 A MAX 50–60 Hz
- 4850GTS 100–240 VAC 5 A MAX 50–60 Hz
- 4850GTS-PWR+ 100–240 VAC 12 A MAX 50–60 Hz
- 4826GTS 100–240 VAC 5 A MAX 50–60 Hz
- 4826GTS-PWR+ 100–240 VAC 12 A 50–60 Hz

Denan statement (Japan/Nippon only)

本製品を安全にご使用頂くため、以下のことにご注意ください。

- 接続ケーブル、電源コード、ACアダプタなどの部品は、必ず製品に同梱されております添付品または指定品をご使用ください。添付品・指定品以外の部品をご使用になると故障や動作不良、火災の原因となることがあります。
- 同梱されております付属の電源コードを他の機器には使用しないでください。上記注意事項を守らないと、死亡や大怪我など人身事故の原因となることがあります。

National Environmental Statements of Compliance

The WEEE Directive 2002/96/EC and RoHS (Restriction of Hazardous Substances) Directive 2002/95/EC sets collection, recycling and recovery targets for various categories of electrical products and their waste.

Restriction on Hazardous Substances Directive Compliance Statement

The Restriction on Hazardous Substances Directive (RoHS) (2002/95/EC), which accompanies the WEEE Directive, bans the use of heavy metals and brominated flame-retardants in the manufacture of electrical and electronic equipment. Specifically, restricted materials under the RoHS Directive are Lead (including solder used in PCB's), Cadmium, Mercury, Hexavalent Chromium, and Bromine.

Avaya declares compliance with the European Union (EU) RoHS Directive (2002/95/EC).

WEEE Directive Compliance Statement

This product at end of life is subject to separate collection and treatment in the EU Member States, Norway, and Switzerland and therefore is marked with the symbol shown at the left. Treatment applied at end of life of these products in these countries shall comply with the applicable national laws implementing Directive 2002/96/EC on Waste of Electrical and Electronic Equipment (WEEE).
Avaya declares compliance with the European Union (EU) WEEE Directive (2002/96/EC).

Chapter 4: Installing the Avaya Ethernet Routing Switch

This section provides the information and procedures to install the Avaya Ethernet Routing Switch 4000 Series. Unless otherwise noted, tasks in this section apply to all switches in this series.

Electrostatic discharge

This section provides information and procedures to prevent electrostatic discharge during installation.

Preventing electrostatic discharge damage

Electrostatic discharge (ESD) is a discharge of stored static electricity that can damage equipment and impair electrical circuitry. Electrostatic voltages can result from friction including, pulling cabling through conduits, walking across carpeted areas, and building static charge in clothing. When you improperly handle electronic components, ESD damage occurs and can result in complete or intermittent failures. While networking equipment is commonly designed and tested to withstand common mode ESD events, voltage can sometimes discharge to some connector pins, which can potentially damage the networking equipment.

Caution:

To protect the Avaya Ethernet Routing Switch against ESD damage, take the following measures before you connect data cables to the device:

- Always use antistatic wrist straps. Make sure you adjust the strap to provide good skin contact.
- Ensure that you properly ground work surfaces and equipment racks for protection against electrostatic discharge. You must connect the common point to the building ground wire. In a properly wired building, the nearest reliable ground is typically at the electrical outlet.
- Avoid contact between equipment and clothing. The wrist or ankle strap protects only the equipment from ESD voltages on the body; ESD voltages on clothing can still cause damage.

- Avoid touching any connector pins.
- Do not remove the wrist or ankle strap until the installation is complete.

Preventing electrostatic damage in new cable installations

With new cable installations, Avaya recommends that you use an ESD discharge cable to reduce the potential for damage from static, that can build up in cables. The following figure illustrates an ESD cable.

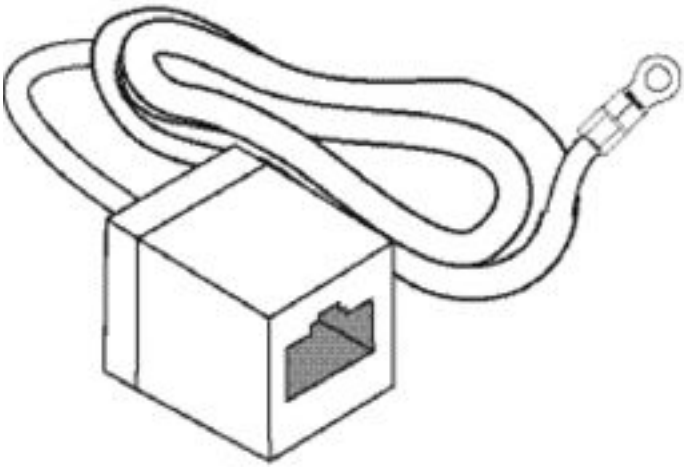

Figure 1: Job aid

To install the ESD discharge cable, perform this procedure.

1. Connect the ground lug on the ESD discharge cable to a safe and suitable earth ground.
2. Connect all RJ-45 cable connectors to the female RJ-45 connector of the ESD discharge cable for at least 5 seconds, and then connect each RJ-45 cable connector to the switch.
3. Leave cables connected to the networking equipment. After you connect cables to networking equipment, the cables do not build up charge.

Environmental requirements

The following table provides the environmental requirements for the individual switches in this series. Ensure that the area where you install the switch and where it operates meets these requirements.

Table 2: Avaya Ethernet Routing Switch 4000 Series environmental requirements

Environmental requirement	Avaya Ethernet Routing Switch 4000 Series models
Ambient Temperature	0C to 50C, continuous operation
Operating Temperature	0C to 50C
Storage Temperature	–40C to 85C
Operating Humidity	0 to 95 percent noncondensing
Operating Relative Humidity	10 to 90 percent noncondensing
Storage Relative Humidity	10 to 90 percent noncondensing
Maximum Operating Altitude	10 000 feet above sea level
Altitude	0 to 10 000 feet above sea level
Storage Altitude	–1 000 to 40 000 feet above sea level
Acoustic Noise	Less than or equal to 45 db at 35C and less than or equal to 57 db at 50C. The temperature is allowed to have ±3.5C deviation around the threshold of 35C, (measurement methods based on ISO 7779).
Miscellaneous Operating Considerations	• No heat sources such as hot air vents or direct sunlight near the switch. • No sources of severe electromagnetic interference near the switch. • No excessive dust in the environment. • An adequate power source is within 6 feet (1.83 meters) of the switch. One 15-amp circuit is required for each power supply. • At least 2 inches (5.08 centimeters) of clearance on each side of the switch unit for ventilation. • Adequate clearance at the front and rear of the switch for access to cables.

Warning:

To avoid bodily injury from hazardous electrical shock and current, never remove the top of the device. No user-serviceable components are inside. For a translation of this statement, see Translations of safety messages on page 79.

Package contents

Following figure illustrates the components that are provided with each switch in the 4000 Series. If any components are missing, contact the switch vendor.

Note:

Avaya ERS 4000 Series hardware can vary in size and shape. Your switch might appear different than the following example figure.

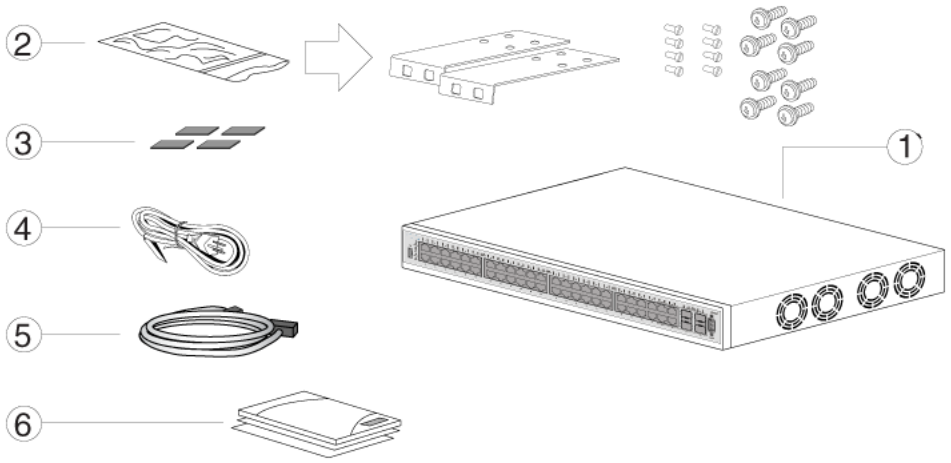

Figure 2: Avaya Ethernet Routing Switch 4000 Series package contents

1. Avaya Ethernet Routing Switch 4000 Series
2. Rack-mounting hardware that includes:
   - Rack-mount brackets
   - Screws to attach brackets to the switch
   - Screws to attach the switch to the equipment rack
3. Rubber footpads
4. AC power cord
5. Standard 1.5 foot (45 cm) stacking cable
6. Documentation

Note:

Cable trays can be provided as an option.

Installing the Avaya Ethernet Routing Switch 4000 Series on a table or shelf

You can install a single 4000 Series Avaya Ethernet Routing Switch on any flat surface. The surface must support the combined weight of the switch and attached cables (from 15 and 20 pounds [7 to 9 kilograms]).

To install a 4000 Series switch on a table or shelf, perform this procedure.

Caution:

Do not place an Avaya Ethernet Power Supply Unit or Avaya Ethernet Redundant Power Supply on top of an Avaya Ethernet Routing Switch 4000 Series. The switch housing of a 4000 Series Avaya Ethernet Routing Switch cannot support the weight of these units. For a translation of this statement, see Translations of safety messages on page 79.

Note:

Avaya ERS 4000 Series hardware can vary in size and shape. Your switch might appear different than the following example figures.

1. Attach the included rubber footpads on the bottom of the switch at the locations.

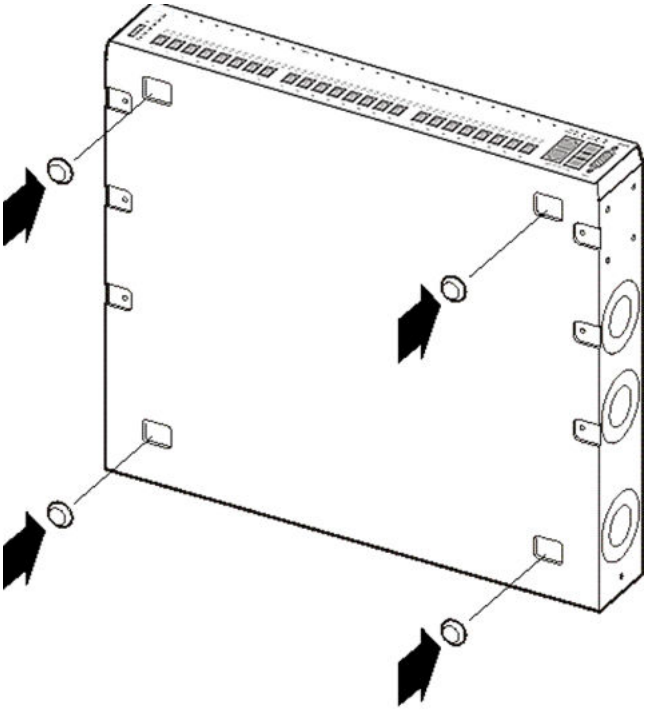

10753FC

2. Set the switch on a table or shelf as illustrated below. Allow at least 2 inches (5.1 centimeters) on each side for proper ventilation and at least 5 inches (12.7 centimeters) at the back for power cord clearance.

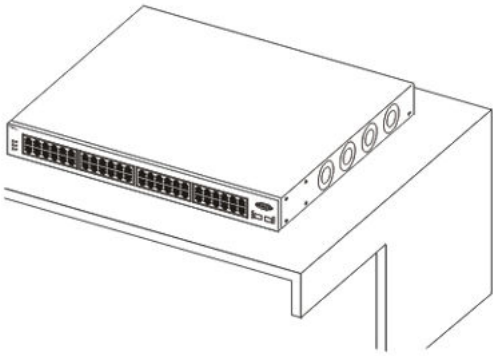

10754FC

Installing the Avaya Ethernet Routing Switch 4000 Series in an equipment rack

To install a 4000 Series switch in an equipment rack, perform this procedure.

Prerequisites for installing the Avaya Ethernet Routing Switch 4000 Series in an equipment rack:

- Ensure that you have a space of 1.75 inches (4.45 centimeters) in height for each switch in an EIA or IEC-standard 19-inch (48.2-centimeter) equipment rack.
- The rack is bolted to the floor and braced if necessary.
- The rack is grounded to the same grounding electrode used by the power service in the area. The ground path must be permanent and must not exceed 1 Ohm of resistance from the rack to the grounding electrode.

Caution:

When you mount the device in a rack, do not stack units directly on top of one another. You must secure each unit to the rack with the appropriate mounting brackets. Mounting brackets cannot support multiple units. For a translation of this statement, see Translations of safety messages on page 79.

Note:

Avaya ERS 4000 Series hardware can vary in size and shape. Your switch might appear different than the following example figures.

1. Attach a bracket to each side of the switch using a #2 Phillips screwdriver as illustrated in below.

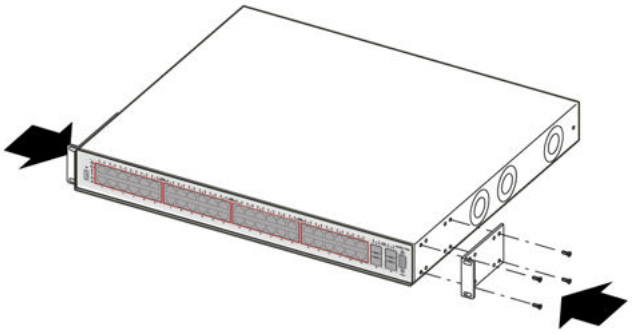

2. Slide the switch into the rack as illustrated.

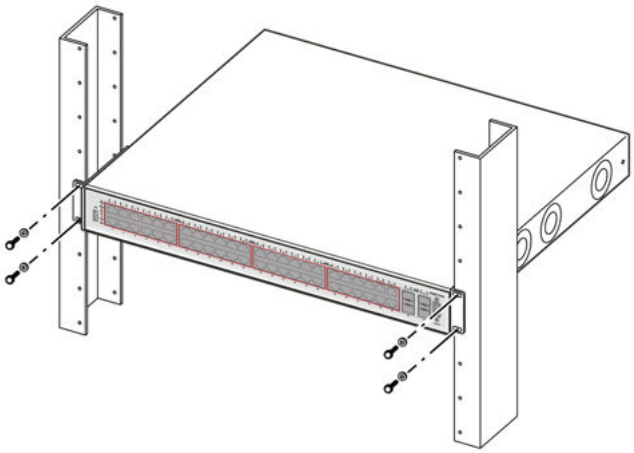

3. Insert and tighten the rack-mount screws using a #2 Phillips screwdriver.

Note:

The ERS 4000 Series mounting hardware is specific for each switch model. Do not mix screws or brackets between different ERS 4000 Series switches.

Cable requirements for the Avaya Ethernet Routing Switch 4000 Series

The following table describes the cables required for a an Avaya Ethernet Routing Switch 4000 Series switch.

Table 3: Switch cable requirements

Required Cable	Description
10/100/1000Base TX Ports	The interconnect cabling must conform to the Cat5e, Cat6, or Cat6e specification of the Commercial Building Telecommunications Cabling Standard, ANSI/TIA/EIA 568-B fitted with an RJ-45 Module jack.
10/100Base TX Ports	The interconnect cabling for 10BaseT Ethernet must conform to Cat3, Cat4, Cat5 (or better) UTP cabling for distances up to 100 meters. The interconnect cabling for 100BaseTX Fast Ethernet must conform to Cat5 (or better) UTP cabling for distances up to 100 meters.
100BaseFX Ports	The interconnect cabling must conform to 50/125 or 62.5/125 micron multimode fiber-optic cabling for distances up to 3 kilometers.

Comments? infodev@avaya.com

Required Cable	Description
Console Port	Varies depending on the switch model. A serial cable with RJ-45 connectors, or a serial cable with a DB-9 female connector on both ends. The maximum length for the console port cable is 25 feet (8.3 meters).
SFP Transceiver Ports	Varies with the installed SFP transceiver. See the documentation shipped with the SFP transceiver for specifications.
USB Port	USB 2.0 Type A-compliant cable.

Important:

In Autonegotiation mode, the Avaya Ethernet Routing Switch 4000 Series automatically provides the proper MDI/MDI-X connection on the RJ-45 ports; to eliminate the need for crossover cables. After you disable Autonegotiation on 10/100 ports, MDI/MDI-x is also disabled.

Installation and removal of Small Form-factor Pluggable (SFP) transceivers

The following section describes how to install and remove Small Form-factor Pluggable (SFP) transceivers in the Avaya Ethernet Routing Switch 4000 Series. For more information about SFP transceiver use and designation, see *Installing Transceivers and Optical Components on Avaya Ethernet Routing Switch 4000 Series*, NN47205-301 .

Important:

The switch will display the interface speed of the T1/E1 SFP as a 100 Mb/s connection even though the interfaces is operating at the appropriate WAN speed. The system uses this value for STP path cost and MLT utilization.

Avaya recommends that you enable egress traffic shaping on the port to 1.544 Mbps when using the T1 SFP to guarantee appropriate Quality of Service and traffic prioritization.

Installing SFP transceivers

Install SFP transceivers by performing this procedure.

1. Remove the transceiver from the protective packaging.
2. Verify that the transceiver is the correct model for the network configuration.
3. Grasp the transceiver between your thumb and forefinger.

4. Insert the transceiver into the proper module on the switch. Apply a light pressure to the transceiver until it clicks and locks into position in the module.

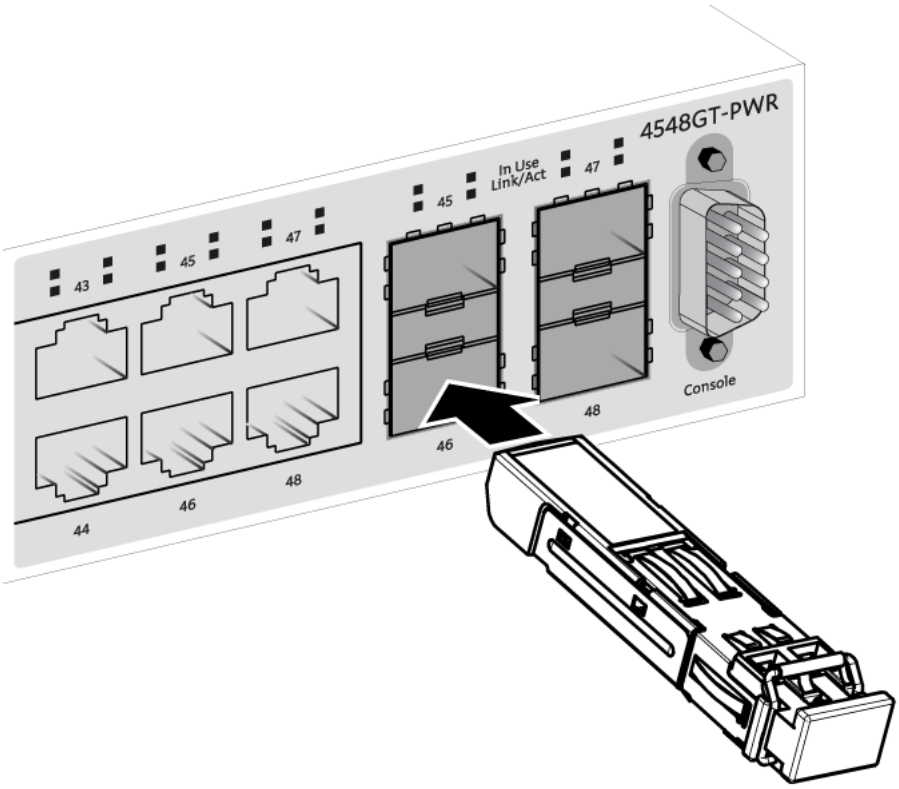

5. Remove the dust cover from the transceiver optical bores.

Removing of SFP transceivers

Remove SFP transceivers by performing this procedure.

1. Disconnect the network fiber cable from the transceiver.
2. Use the locking mechanism on the transceiver to release it. The locking mechanism varies from model to model as illustrated below.

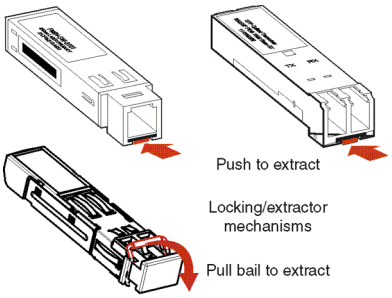

3. Slide the transceiver from the module slot.
4. If the transceiver does not slide easily from the module slot, use a gentle side-to-side rocking motion while firmly pulling the transceiver from the slot.
5. Attach a dust cover over the fiber-optic bores and store the transceiver in a safe place until you need it.

Important:

Discard transceivers in accordance with the proper laws and regulations.

RJ-45 connector pin assignments

The following section describes the connector pin assignments for the RJ-45 connectors in the Avaya Ethernet Routing Switch 4000 Series switches.

Avaya Ethernet Routing Switches 4524GT, 4526GTX and 4548GT

The following tables describes the RJ-45 connector pin assignments in the Avaya Ethernet Routing Switches 4524GT, 4526GTX and 4548GT.

Connector	Pin Number	Signal for 10/100Base T MDI configuration	Signal for 10/100BaseT MDI-X configuration
	1	Output transmit data + (TX–)	Input receive data + (RX–)
	2	Output transmit data - (TX–)	Input receive data - (RX–)
	3	Input receive data + (RX+)	Output transmit data + (TX +)
	6	Input receive data - (RX+)	Output transmit data - (TX +)
	4, 5, 7, 8	Not used	Not used

Connector	Pin Number	Signal for 1GBase T MDI configuration	Signal for 1GBase T MDI-X configuration
	1	TP0+	TP1+
	2	TP0–	TP1–
	3	TP1+	TP0+
	4	TP2+	TP3+
	5	TP2–	TP3–

Connector	Pin Number	Signal for 1GBase T MDI configuration	Signal for 1GBase T MDI-X configuration
	6	TP1–	TP0–
	7	TP3+	TP2+
	8	TP3–	TP2–

Avaya Ethernet Routing Switches 4524GT-PWR, 4526GTX-PWR and 4548GT-PWR

The following table describes the RJ-45 connector pin assignments in the Avaya Ethernet Routing Switches 4524GT-PWR, 4526GTX-PWR and 4548GT-PWR.

Table 4: 4524GT-PWR, 4526GTX-PWR and 4548GT-PWR RJ-45 connector pin assignments

Connector	Pin Number	Signal for 1GBaseT MDI configuration	Signal for 1GBaseT MDI-X configuration
	1	TP0+	TP1+
	2	TP0–	TP1–
	3	TP1+	TP0+
	4	TP2+	TP3+
	5	TP2–	TP3–
	6	TP1–	TP0–
	7	TP3+	TP2+
	8	TP3–	TP2–

Avaya Ethernet Routing Switches 4526T and 4550T

The following table describes the RJ-45 connector pin assignments in the Avaya Ethernet Routing Switches 4526T, 4550T, 4826GTS, and 4850GTS.

Table 5: 4526T, 4550T, 4826GTS, and 4850GTS RJ-45 connector pin assignments

Connector	Pin Number	Signal for 10/100Base T MDI configuration	Signal for 10/100BaseT MDI-X configuration
	1	Output transmit data + (TX–)	Input receive data + (RX–)
	2	Output transmit data - (TX–)	Input receive data - (RX–)
	3	Input receive data + (RX+)	Output transmit data + (TX +)
	6	Input receive data - (RX+)	Output transmit data - (TX +)
	4, 5, 7, 8	Not used	Not used

Avaya Ethernet Routing Switches 4526T-PWR and 4550T-PWR

The following table describes the RJ-45 connector pin assignments in the Avaya Ethernet Routing Switches 4526T-PWR and 4550T-PWR.

Table 6: 4526T-PWR and 4550T-PWR RJ-45 connector pin assignments

Connector	Pin Number	Signal for 1GBaseT MDI configuration	Signal for 1GBaseT MDI-X configuration
	1	TP0+	TP1+
	2	TP0–	TP1–
	3	TP1+	TP0+
	4	TP2+	TP3+
	5	TP2–	TP3–
	6	TP1–	TP0–
	7	TP3+	TP2+
	8	TP3–	TP2–

Avaya Ethernet Routing Switches 4526GTX-PWR, 4524GT-PWR, 4550T-PWR and 4526T-PWR PoE

The following table describes the Power over Ethernet (PoE) RJ-45 connector pin assignments in the Avaya Ethernet Routing Switches 4526GTX-PWR, 4524GT-PWR, 4550T-PWR and 4526T-PWR.

Table 7: 4526GTX-PWR, 4524GT-PWR, 4550T-PWR and 4526T-PWR PoE RJ-45 connector pin assignments

Connector	Pin Number	Signal	Description
	1	RD+/power–	Recieve Data+/power–
	2	RD–/power–	Receive Data–/power–
	3	TD+/power+	Transmit Data+/power+
	4	Not applicable	Not applicable
	5	Not applicable	Not applicable
	6	TD–/power+	Transmit Data–/power+
	7	Not applicable	Not applicable
	8	Not applicable	Not applicable

Avaya Ethernet Routing Switch 4548GT-PWR PoE, 4526T-PWR+, 4550T-PWR+, 4826GTS-PWR+, and 4850GTS-PWR+

The following table describes the Power over Ethernet, and Power over Ethernet Plus RJ-45 connector pin assignments in the Avaya ERS 4548GT-PWR, 4526T-PWR+, 4550T-PWR+, 4826GTS-PWR+, and 4850GTS-PWR+.

Table 8: PWR PoE, and PWR+ RJ-45 connector pin assignments

Connector	Pin Number	Signal	Description
	1	RX+/power–	Recieve Data+/power–
	2	RX–/power–	Receive Data–/power–
	3	TX+/power+	Transmit Data+/power+
	4	Not applicable	Not applicable
	5	Not applicable	Not applicable
	6	TX–/power+	Transmit Data–/power+
	7	Not applicable	Not applicable
	8	Not applicable	Not applicable

Important:

The Avaya ERS 4548GT-PWR uses pins 1, 2, 3, and 6 for PoE, and is compliant with Alternative A (MDI-X) in IEEE802.3af.

The Avaya ERS 4000 Series PWR+ models use pins 1, 2, 3, and 6 for PoE Plus, and is compliant with Type 2 (MDI-X) in IEEE802.3at.

Console port pin assignments

The following table describes the console port pin assignments in the Avaya Ethernet Routing Switch 4000 Series.

Important:

Avaya Ethernet Routing Switch 4000 Series supports only CLI Quickstart use on the console port.

Table 9: DB–9 Console port pin assignments

Connector	Pin Number	Signal
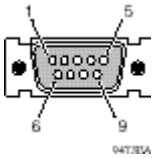	1	Carrier detect (not used)
	2	Transmit Data (TXD)
	3	Receive Data (RXD)
	4	Data terminal ready (not used)
	5	Signal ground (GND)
	6	Not used
	7	Request to send (not used)
	8	Not used
	9	Ring indicator (not used)

Table 10: RJ–45 Console port pin assignments

Connector	Pin Number	Signal
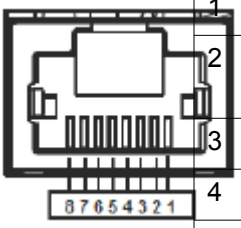	1	Ready to send (RTS) — optional
	2	Data terminal ready (DTR) — optional, can swap or link with pin 8
	3	Transmit data (TXD) — mandatory
	4	Carrier detect (DCD) — optional
	5	Ground (GND) — mandatory
	6	Receive data (RXD) — mandatory
	7	Data set ready (DSR) — optional
	8	Clear to send (CTS) — optional, can swap or link with pin 1

Universal Serial Bus (USB) ports

The Avaya Ethernet Routing Switch 4000 Series switches feature a USB port on the front panel. Switch administrators can use the USB port to perform tasks, previously performed through Trivial File Transfer Protocol (TFTP), with a USB Mass Storage Device (for example, a flash drive or thumb drive):

- download software
- generate and download the ASCII configuration file
- generate and download the binary configuration file

The storage capacity of the USB device in use limits file and system operations.

Support is available only for USB drives that comply with the Mass Storage subsection of the USB 1.1 and USB 2.0 specification. Support does not extend to third-party devices that do not comply with these standards. Off-the-shelf drives that do not comply with these standards cannot operate with the switch. Only FAT or FAT32 file systems are currently supported; USB drives with NTFS file systems are not supported. Consult the documentation provided with the USB drive to ensure compliance with these standards.

Resetting the switch to the default configuration

The **`restore factory-default`** command resets the switch or stack to its default configuration.

To reset the switch or stack to its default configuration perform the following procedure.

1. Enter `restore factory-default`.

   The following message appears:

   ```
   Warning the switch/stack will be reset to factory default
   configuration. Do you wish to continue (y/n) ?
   ```

2. Enter `y` to restore the switch to default.

   Important:

   If you enter `restore factory-default [-y]`, the `[-y]` parameter instructs the switch not to prompt for confirmation.

The **`restore factory-default`** command is in the privileged exec command mode.

For more information on USB ASCII Config Support, refer to the *Configuring Systems on Avaya Ethernet Routing Switch 4000 Series*, NN47205-500.

Comments? infodev@avaya.com

Power specifications for the Avaya Ethernet Routing Switch 4000 Series

This section describes power specifications for the switches in the 4000 Series.

Note:

If you connect one type of Power over Ethernet switch to another, for example a 4548GT-PWR and a 4550T-PWR, one switch may deliver power to the other. This is due to the PoE Legacy Type Detection. Workaround: Legacy detection can be disabled on the switch if you are not using any PoE devices which require legacy detection. An alternate solution is to administratively disable Power over Ethernet on ports interconnecting any two Power over Ethernet switches.

Avaya Ethernet Routing Switch 4548GT, 4550T, 4526FX, 4526T, 4524GT, and 4526GTX

The following table describes the regulatory AC power specifications for the Avaya Ethernet Routing Switch 4526FX, 4526T, 4550T, 4524GT, 4526GTX and 4548GT non-PoE switches. It should be noted that regulatory power specifications are based on the maximum rated capacity of the power supplies and are not based on typical power consumption which is typically lower.

Table 11: AC power specifications

	4548GT	4550T	4526FX	4526T	4526GTX	4524GT
Input Current:	3A/1.5A	3A/1.5A	3A/1/5A	3A/1.5A	3A/1.5A	3A/1.5A
Input Voltage (rms):	100 to 240VAC at 50 to 60 Hz	100 to 240VAC at 50 to 60 Hz	100 to 240VAC at 50 to 60 Hz	100 to 240VAC at 50 to 60 Hz	100 to 240VAC at 50 to 60 Hz	100 to 240VAC at 50 to 60 Hz
Power Consumption:	150W maximum	150W maximum	150W maximum	150W maximum	150W maximum	150W maximum
Thermal Rating:	415 BTU/Hr maximum	240 BTU/Hr maximum	256 BTU/Hr maximum	188 BTU/Hr maximum	307 BTU/Hr maximum	290 BTU/Hr maximum

Avaya Ethernet Routing Switch 4548GT-PWR, 4550T-PWR, 4526T-PWR, 4526GTX-PWR, and 4524GT-PWR

The following table describes the regulatory AC power specifications for the Avaya Ethernet Routing Switch 4526T-PWR, 4550T-PWR, 4524GT-PWR, 4526GTX-PWR, and 4548GT-PWR switches. It should be noted that regulatory power specifications are based on the maximum rated capacity of the power supplies and are not based on typical power consumption which is typically lower.

Table 12: AC power specifications

	4548GT- PWR	4550T-PWR	4526T-PWR	4526GTX-PWR	4524GT-PWR
Input Current:	6.5A/3.3A	6.5A/3.3A	6.5A/3.3A	6.5A/3.3A	6.5A/3.3A
Input Voltage (rms):	100 to 240VAC 50 to 60 Hz	100 to 240VAC at 50 to 60 Hz	100 to 240VAC at 50 to 60 Hz	100 to 240VAC at 50 to 60 Hz	100 to 240VAC at 50 to 60 Hz
Power Consumption:	587W maximum	587W maximum	587W maximum	587W maximum	587W maximum
Thermal Rating:	788 BTU/Hr	615 BTU/Hr maximum	375 BTU/Hr maximum	546 BTU/Hr maximum	546 BTU/Hr maximum
Inrush Current:	20A 120VAC at maximum load, 40A 240VAC at maximum load	20A 120VAC at maximum load, 40A 240VAC at maximum load	70A 120VAC at maximum load, 40A 240VAC at maximum load	70A 120VAC at maximum load, 40A 240VAC at maximum load	70A 120VAC at maximum load, 40A 240VAC at maximum load
Turn on Condition:	1 second maximum after application of AC power	1 second maximum after application of AC power	1 second maximum after application of AC power	1 second maximum after application of AC power	1 second maximum after application of AC power
Important: 12 V output rise time, from 10 to 90 percent, must be the maximum of 50 ms and monotonic under all defined input and output conditions.					
Efficiency:	70 percent minimum	70 percent minimum	70 percent minimum	70 percent minimum	70 percent minimum

Comments? infodev@avaya.com

Avaya Ethernet Routing Switch 4526T-PWR+, 4550T-PWR+, 4826GTS, 4826GTS-PWR+, 4850GTS, and 4850GTS-PWR+

The following table describes the regulatory AC power specifications for the Avaya Ethernet Routing Switch 4526T-PWR+, 4550T-PWR+, 4826GTS, 4826GTS–PWR+, 4850GTS, and 4850GTS-PWR+ switches. It should be noted that regulatory power specifications are based on the maximum rated capacity of the power supplies and are not based on typical power consumption which is typically lower.

Table 13: AC power specifications

	4526T-PWR+	4550T-PWR+	4826GTS	4826GTS-PWR+	4850GTS	4850GTS-PWR+
Input Current:	12A/6A	12A/6A	5A/2.5A	12A/6A	5A/2.5A	12A/6A
Input Voltage (rms):	100 to 240VAC 50 to 60 Hz	100 to 240VAC at 50 to 60 Hz	100 to 240VAC at 50 to 60 Hz	100 to 240VAC at 50 to 60 Hz	100 to 240VAC at 50 to 60 Hz	100 to 240VAC at 50 to 60 Hz
Power Consumption:	119W maximum	213W maximum	74.3W maximum	149W maximum	94.6W maximum	248W maximum
Thermal Rating:	406 BTU/Hr	726 BTU/Hr maximum	254 BTU/Hr maximum	508 BTU/Hr maximum	323 BTU/Hr maximum	508 BTU/Hr maximum
Inrush Current:	70A maximum	70A maximum	40A maximum	70A maximum	40A maximum	70A maximum
Turn on Condition:	1 second maximum after application of AC power	1 second maximum after application of AC power	1 second maximum after application of AC power	1 second maximum after application of AC power	1 second maximum after application of AC power	1 second maximum after application of AC power
Important: 12 V output rise time, from 10 to 90 percent, must be the maximum of 50 ms and monotonic under all defined input and output conditions.						
Efficiency:	70 percent minimum	70 percent minimum	70 percent minimum	70 percent minimum	70 percent minimum	70 percent minimum

Avaya Ethernet Routing Switch Redundant Power Supply 15 power specification

The Avaya Ethernet Routing Switch Redundant Power Supply 15 (RPS 15) is an external secondary power source for Avaya Ethernet Routing Switch 4000 Series devices. In addition, when connected to a Power over Ethernet (PoE) switch, such as the 4548GT-PWR or the 4550T-PWR, the RPS 15 can supplement the amount of Direct to Ethernet (DTE) power to deliver up to 740 watts of PoE.

Avaya DC to DC converter module

To use the Avaya Ethernet Routing Switch Redundant Power Supply Model 15 (RPS 15) with the Avaya Ethernet Routing Switch 4000 Series non-PoE models, 4548GT, 4550T, 4526FX, 4526T, 4524GT, and 4526GTX require a DC-DC converter module. The DC-DC converter module plugs into the slot on the back of a non-PoE switch and connects the RPS to the switch.

For information about connecting the converter module to the Avaya Ethernet Routing Switch 4000 Series non-PoE models, 4548GT, 4550T, 4524GT, or 4526FX, see *DC-DC Converter Module for the Baystack 4000 Series Switch.*

Avaya Ethernet Routing Switch Power over Ethernet Plus power supply power specification

The Avaya Ethernet Routing Switch 4000 Series PWR+ switch models, and all ERS 4800 Series models support two internal field replaceable power supplies. You can install a secondary power supply to provide redundancy, load sharing, and add Power over Ethernet Plus (PoE+) power budget on PWR+ models.

PWR+ models support dual 54V 1000W Power over Ethernet Plus (PoE+) AC power supplies.

Figure 3: 1000W power supply

The ERS 4826GTS and ERS 4850GTS support 300W AC power supplies.

Figure 4: 300W power supply

Note:

The RPS15 external power supply is not required for redundant power on PWR+ models, and all ERS 4800 Series models. You can install a secondary internal power supply.

The 300W and 1000W AC power supplies use an IEC 60320 C16 AC power cord connector. The AC power cord is in close proximity to the hot air exhaust, and supports high operating temperatures

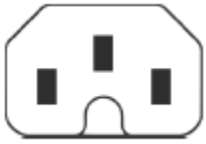

Figure 5: IEC 60320 C16 connector

Power over Ethernet Plus specifications

Model	Maximum PoE W	Average PoE W on 26 port models	Average PoE W on 50 port models
ERS 4000 Series PWR+ models	855W with one power supply 1855W with two power supplies	15.4W (802.3af) 32.4W (802.3.at)	15.4W (802.3af) 17.8W (802.3.at) — 1 power supply 32.4W (802.3at) — 2 power supplies

- All PWR+ models can support 802.3af 15.4W on each port with one power supply installed. You can add a second power supply for redundancy.
- PWR+ 26 port models can support 802.3at 32.4W on each port with one power supply installed. You can add a second power supply for redundancy.
- PWR+ 50 port models can support 802.3at 32.4W on each port with two power supplies installed. PoE power reduces to an average of 17.8W on each port with one power supply.

Installing the Avaya Ethernet Routing Switch 4000 Series power supply

You must install at least one power supply before using the switch. ERS 4000 Series PWR+ models and ERS 4800 Series models support two field replaceable internal power supplies. If supported, you can install an optional second power supply for redundancy, load sharing, or to provide additional PoE+ power budget.

Perform the following procedure to install an internal power supply into your switch.

Note:

Avaya ERS 4000 Series hardware can vary. This procedure only applies to hardware models with field replaceable power supplies.

Comments? infodev@avaya.com

1. If a blanking plate covers the required power supply slot, remove the blanking plate before attempting to insert the power supply.
2. Insert each power supply into a rear power supply slot.
3. Verify that each power supply is fully seated in the slot. Secure the power supply with the two thumb screws.

   Note:

   The switch chassis can prevent an incorrect installation of a power supply. If you insert a power supply upside down, it will not fully insert and the thumb screws will not engage.
4. Once you install a power supply, you can proceed with connecting AC power.

Important:

You can hot swap power supplies while the switch is operational. One power supply is required for continued switch operation. PoE load reductions can occur if you remove one power supply while the switch is operating with dual power supplies.

Connect AC power

This section explains power cord specifications and how to connect AC power.

Power cord specifications

To connect AC power to the switch, you need an appropriate AC power cord as described in the following table, also see the following table for plug specifications.

Table 14: International power cord specifications

Country and Plug Specification	Specifications	Typical Plug
Continental Europe: • CEE7 standard VII male plug • Harmonized cord (HAR marking on the outside of the cord jacket to comply with the CENELEC Harmonized Document HD-21)	• 220 or 230VAC • 50 Hz • Single phase	
United States of America, Canada, and Japan: • NEMA5-15P male plug • UL-recognized (UL stamped on cord jacket) • CSA-certified (CSA label secured to the cord)	• 100 or 120VAC • 50–60 Hz • Single phase	

Country and Plug Specification	Specifications	Typical Plug
United Kingdom: • BS1363 male plug with fuse • Harmonized cord	• 240VAC • 50 Hz • Single phase	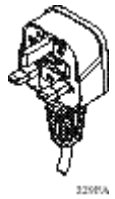
Australia: • AS3112-1981 male plug	• 240VAC • 50 Hz • Single phase	

Danger:

Using power cords with a proper grounding path

Use only power cords that have a grounding path. Without a proper ground, a person who touches the switch is in danger of receiving an electrical shock. Lack of a grounding path to the switch can result in excessive emissions. For a translation of this statement, see Translations of safety messages on page 79.

Connect power to the back panel

Connect the AC power cord to the back of the switch, and then connect the cord to an AC power outlet. The following figure shows how to connect the AC power cord to the switch back panel.

Important:

The Avaya Ethernet Routing Switch 4000 Series has no AC power switch. When you connect the power cord to a suitable, energized AC power outlet, the switch powers up immediately.

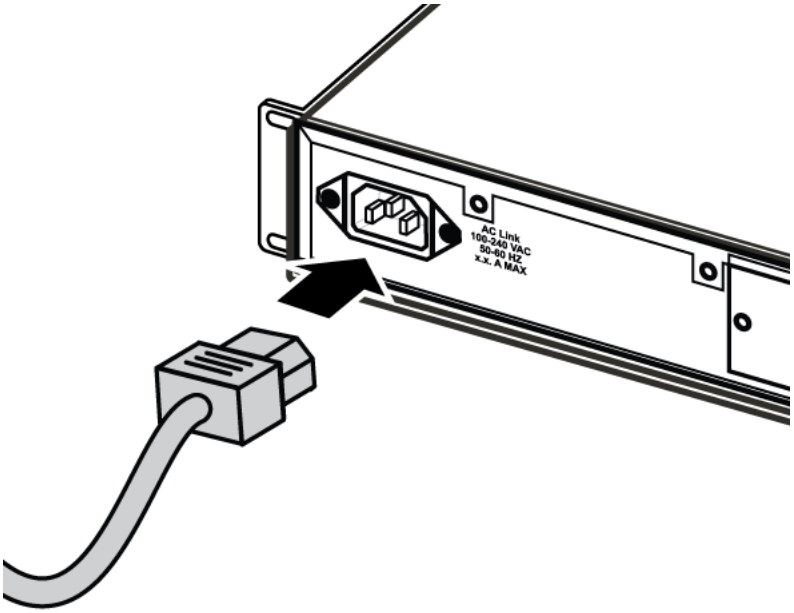

Figure 6: Connecting AC power to the back panel

Warning:

Disconnecting the AC power cord is the only way to turn off AC power to the Avaya Ethernet Routing Switch 4000 Series. Always connect the AC power cord in a quickly and safely accessible location in case of an emergency. For a translation of this statement, see Translations of safety messages on page 79.

Check Light Emitting Diode (LED) on the Avaya Ethernet Routing Switch 4000 Series

The figures and tables in the following sections describe the LEDs on the Avaya Ethernet Routing Switch 4000 Series switches. The tables describe LED operation for a switch that finishes the power-on self-test.

Front panel LEDs

The following diagrams illustrate the components on the front panels of the Avaya Ethernet Routing Switch 4000 Series switches:

- Figure 7: Avaya Ethernet Routing Switch 4548GT on page 50
- Figure 8: Avaya Ethernet Routing Switch 4548GT-PWR on page 51

- Figure 9: Avaya Ethernet Routing Switch 4550T on page 51
- Figure 10: Avaya Ethernet Routing Switch 4550T-PWR and 4550T-PWR+ on page 51
- Figure 11: Avaya Ethernet Routing Switch 4526FX on page 52
- Figure 12: Avaya Ethernet Routing Switch 4526T on page 53
- Figure 13: Avaya Ethernet Routing Switch 4526T-PWR and 4526T-PWR+ on page 53
- Figure 16: Avaya Ethernet Routing Switch 4526GTX on page 55
- Figure 17: Avaya Ethernet Routing Switch 4526GTX-PWR on page 55
- Figure 14: Avaya Ethernet Routing Switch 4524GT on page 54
- Figure 15: Avaya Ethernet Routing Switch 4524GT-PWR on page 54
- Figure 18: Avaya Ethernet Routing Switch 4826GTS on page 56
- Figure 19: Avaya Ethernet Routing Switch 4826GTS-PWR+ on page 56
- Figure 20: Avaya Ethernet Routing Switch 4850GTS on page 57
- Figure 21: Avaya Ethernet Routing Switch 4850GTS-PWR+ on page 57

For detailed explanations of the states indicated by each front panel LED type, see the following sections:

- Switch LED state indicators on page 58
- Port LED state indicators on page 59
- Table 17: SFP transceiver Port LED state indicators on page 60

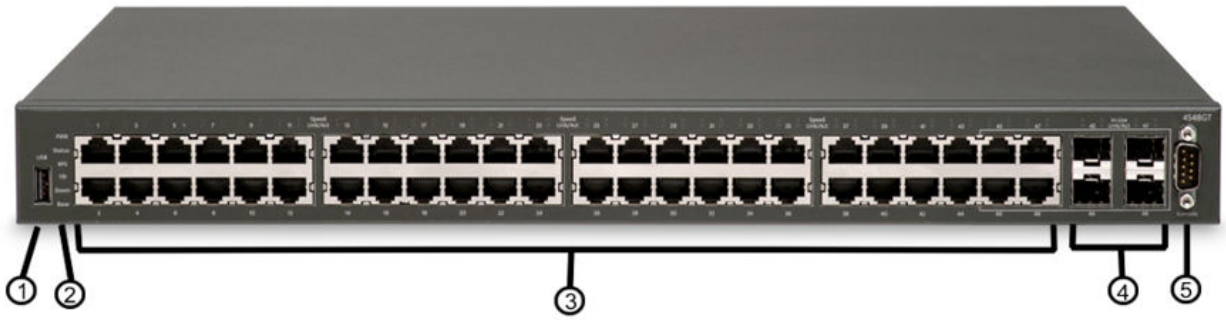

Figure 7: Avaya Ethernet Routing Switch 4548GT

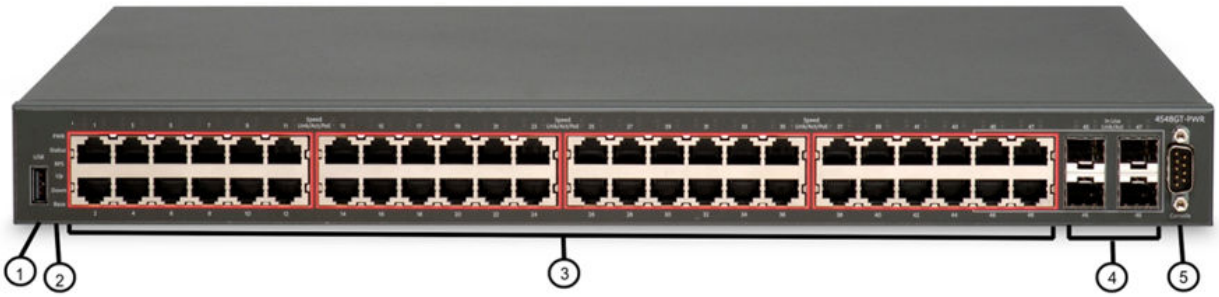

Figure 8: Avaya Ethernet Routing Switch 4548GT-PWR

1. USB port
2. Switch LEDs
3. 10/100/1000 Ports (LEDs above ports)
4. Shared SFP Transceiver Ports (LEDs above ports)
5. Console Port

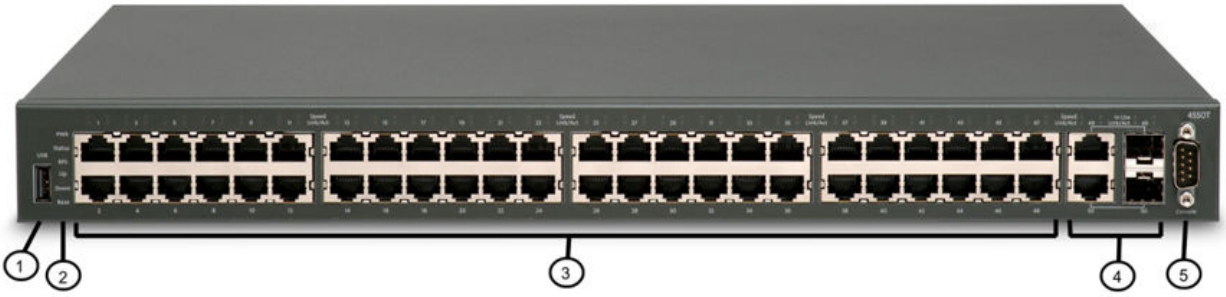

Figure 9: Avaya Ethernet Routing Switch 4550T

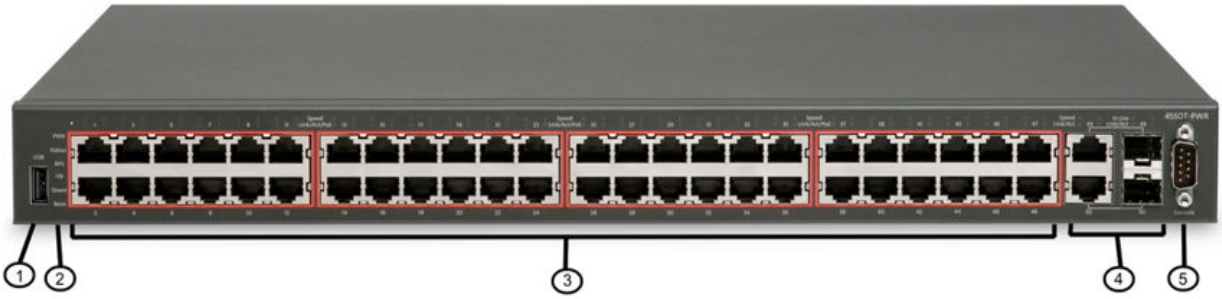

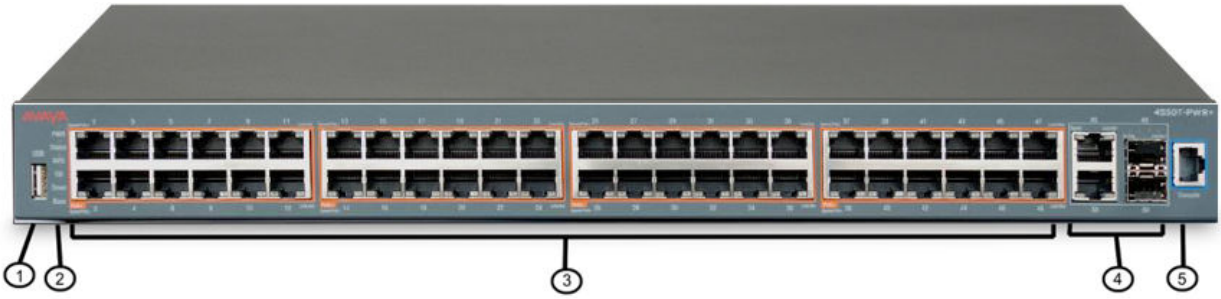

Figure 10: Avaya Ethernet Routing Switch 4550T-PWR and 4550T-PWR+

1. USB port
2. Switch LEDs
3. 10/100 ports (LEDs above ports)
4. combo 10/100/1000 SFP ports (LEDs above ports)
5. Console port (DB9 port on PWR, RJ45 port on PWR+)

Note:

Your switch might appear slightly different depending on your model type. 4550T-PWR ports are outlined with a red border to indicate PoE support, 4550T-PWR+ ports are outlined in orange to indicate PoE+ support.

Figure 11: Avaya Ethernet Routing Switch 4526FX

1. USB Port
2. Switch LEDs
3. 100BaseFX ports (LEDs above ports)
4. combo 10/100/1000 SFP ports (LEDs above ports)
5. Console Port

Figure 12: Avaya Ethernet Routing Switch 4526T

1. USB Port
2. Switch LEDs
3. 10/100 ports (LEDs above ports)
4. combo 10/100/1000/SFP ports
5. Console Port

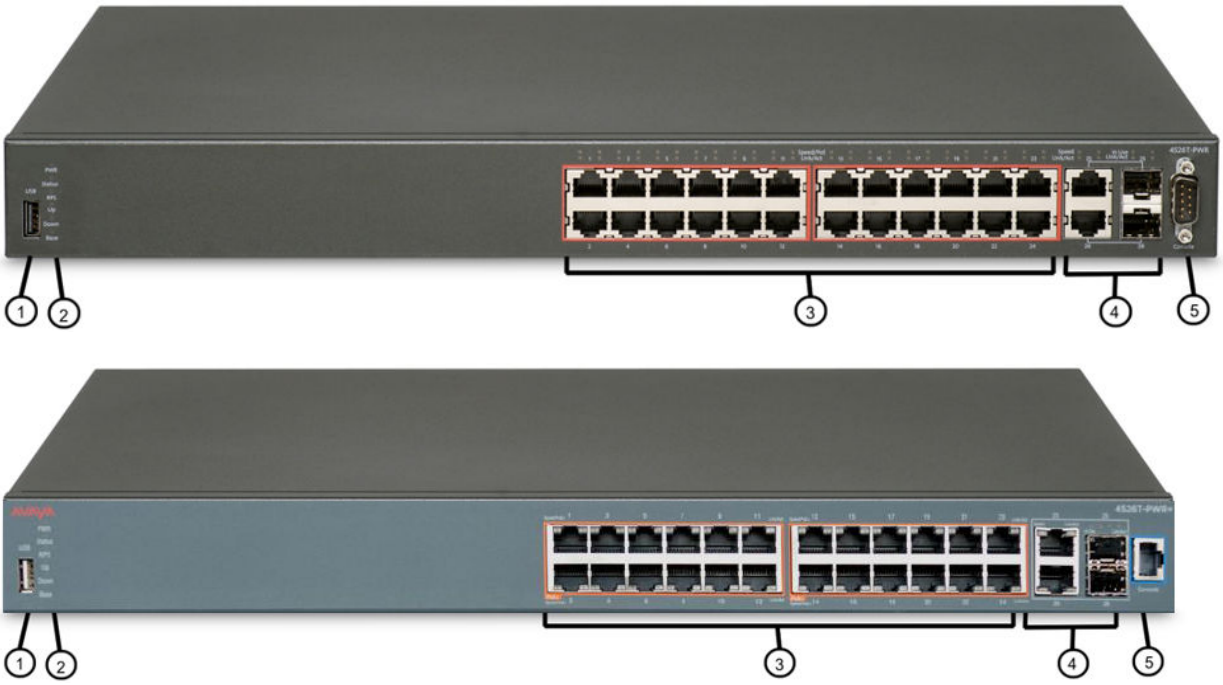

Figure 13: Avaya Ethernet Routing Switch 4526T-PWR and 4526T-PWR+

1. USB Port
2. Switch LEDs
3. 10/100 ports (LEDs above ports)
4. combo 10/100/1000/SFP ports
5. Console Port (DB9 port on PWR, RJ45 port on PWR+)

Note:

Your switch might appear slightly different depending on your model type. 4526T-PWR ports are outlined with a red border to indicate PoE support, 4526T-PWR+ ports are outlined in orange to indicate PoE+ support.

Figure 14: Avaya Ethernet Routing Switch 4524GT

Figure 15: Avaya Ethernet Routing Switch 4524GT-PWR

1. USB Port
2. Switch LEDs
3. 10/100/1000 ports (LEDs above ports)
4. Shared SFP ports: can support low speed SFPs, for example — 100FX SFP
5. Console Port

Figure 16: Avaya Ethernet Routing Switch 4526GTX

1. USB Port	4. 10/100/1000 RJ-45 ports (LEDs above ports)
2. Switch LEDs	5. Shared SFP combo ports
3. 10Gig XFP slots	6. Console Port

Figure 17: Avaya Ethernet Routing Switch 4526GTX-PWR

1. USB Port	4. 10/100/1000 ports (LEDs above ports)
2. Switch LEDs	5. Shared SFP ports
3. 10Gig XFP slots	6. Console Port

Figure 18: Avaya Ethernet Routing Switch 4826GTS

1. USB Port
2. Switch LEDs
3. 10/100/1000 ports (LEDs above ports)
4. Shared SFP ports and SFP+ ports. SFP ports can support low speed 100FX SFP
5. Console Port

Figure 19: Avaya Ethernet Routing Switch 4826GTS-PWR+

1. USB Port
2. Switch LEDs
3. 10/100/1000 PoE+ ports (LEDs above ports)
4. Shared SFP ports and SFP+ ports. SFP ports can support low speed 100FX SFP
5. Console Port

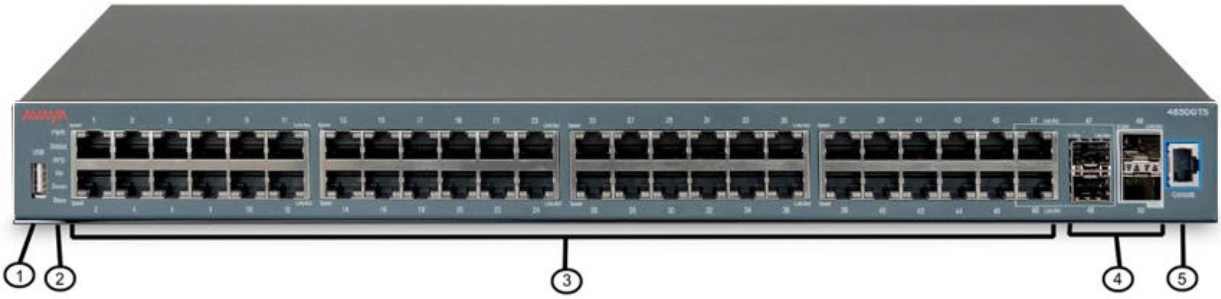

Figure 20: Avaya Ethernet Routing Switch 4850GTS

1. USB Port
2. Switch LEDs
3. 10/100/1000 ports (LEDs above ports)
4. Shared SFP ports and SFP+ ports. SFP ports can support low speed 100FX SFP
5. Console Port

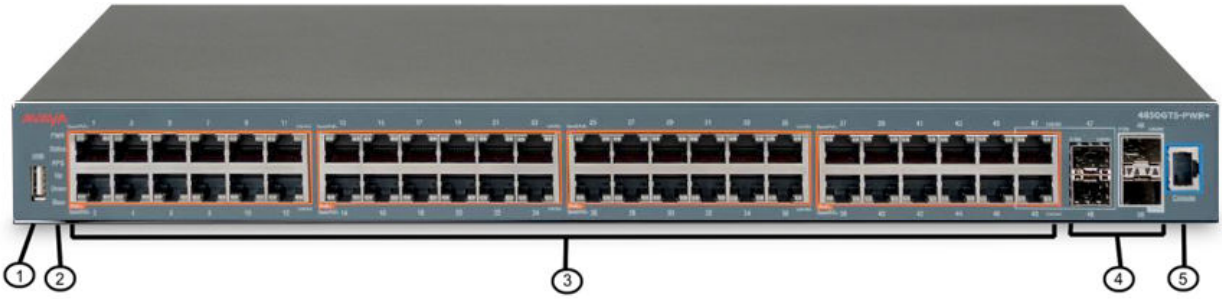

Figure 21: Avaya Ethernet Routing Switch 4850GTS-PWR+

1. USB Port
2. Switch LEDs
3. 10/100/1000 PoE+ ports (LEDs above ports)
4. Shared SFP ports and SFP+ ports. SFP ports can support low speed 100FX SFP
5. Console Port

Warning:

Fiber optic equipment can emit laser or infrared light that can injure your eyes. Never look into an optical fiber or connector port. Always assume that fiber-optic cables are connected to a light source. For a translation of this statement, see Translations of safety messages on page 79.

Switch LED state indicators

The following figure describes the main switch LED state indications provided by LED color and fluctuation cues.

Table 15: Switch LED state indicators

Label	Color and Status	Description
PWR	Green (solid)	The switch is receiving power either from the primary or secondary power supply.
	Off	The switch is not receiving power and not operating.
Status	Green (solid)	• **During start-up:** The power-on self-test (POST) is complete and the switch is operating normally. • **After start-up:** The switch is running the agent code successfully.
	Green (blinking)	The switch is loading the agent software code.
	Amber (solid)	The switch encountered an error when running the diagnostic software. (See note)
	Amber (blinking)	The switch is booting and running diagnostic software. Normal activity during boot process. (See note)
	Off	The switch failed the power-on self-test (POST) or failed to load the agent code.
RPS	Green (solid)	The switch is connected to a redundant power supply unit (RPS) or a secondary internal power supply, and is operating normally.
	Green (blinking)	The switch is connected to a secondary power supply, but the power input is disconnected. (See note)
	Amber (solid)	The power supply in slot 1 or slot 2 was removed after operating. (See note)
	Amber (blinking)	The power supply in slot 1 or slot 2 is present, but not supplying power to the switch. (See note)
	Off	No power to secondary power supply. The switch is not connected to an RPS or secondary power supply. The RPS is not supplying power, or the DC/DC module is not supplying power..
Up / Down	Green (solid)	The switch formed a neighbor with the adjacent switch over Stack up/down cables.
	Green (blinking)	The switch formed a partial neighbor with the adjacent switch over Stack up/down cables. Check the switch logs.

Comments? infodev@avaya.com

Label	Color and Status	Description
	Amber (solid)	The switch detects Stack up/down cables are present and connected to an adjacent switch, but adjacency did not complete. Check the switch logs.
	Off	No Stack up/down connection is present, or the switch is in stand-alone mode.
Base	Green (solid)	The switch is operating as the base unit for the stack.
	Green (blinking)	The switch joined the stack and Automatic Unit Replacement is running to upgrade the diagnostics, agent, or configuration file.
	Amber (solid)	The switch is operating as the temporary base unit for the stack.
	Amber (blinking)	Problem with election of a base unit for the stack. Either no switch has the base unit switch on, or multiple units have the base unit switch on.
	Amber (fast flashing)	The switch was not allowed to join the stack. Check the switch logs.
	Off	The switch is not the base unit or temporary base unit, or the switch is operating in stand-alone mode.

Note:

Status LED state for ERS 4800 Series and PWR+ models only.

Port LED state indicators

This section describes the port LED state indicators by color and fluctuation cues.

The following list describes the three port LEDs:

- Activity indicates the level of activity on the link.
- Link indicates the presence of an Ethernet link.
- Speed indicates the port speed (for example, 10 Mb/s, 100 Mb/s, 1000 Mb/s).

Table 16: RJ-45 Port LED state indicators

Label	Color and Status	Description
Speed/PoE	Green, Pulse Green —Green	The port is set to operate at 1000 Mb/s on gigabit PoE models (ERS 4524GT-PWR, 4526GTX-PWR and 4548GT-PWR) and 100 Mb/s on the Fast Ethernet models (ERS 4526T-PWR & 4550T-PWR).

Label	Color and Status	Description
	Green, Steady	The port is set to operate at 1000 Mb/s on gigabit PoE models (ERS 4524GT, 4526GTX and 4548GT) and 100 Mb/s on the Fast Ethernet models (ERS 4526T & 4550T).
	Amber, Pulse Amber —Amber	The port is set to operate at 100 Mb/s on gigabit PoE models (ERS 4524GT-PWR, 4526GTX-PWR and 4548GT-PWR) and 100 Mb/s on the Fast Ethernet models (ERS 4526T-PWR & 4550T-PWR).
	Amber, Steady	The port is set to operate at 100 Mb/s on gigabit PoE models (ERS 4524GT, 4526GTX and 4548GT) and 100 Mb/s on the Fast Ethernet models (ERS 4526T & 4550T).
	Amber, Green Pulse	The port is experiencing a PoE error.
	Off	When the Link/Activity LED is green and the Speed LED is off, the port is set to operate at 10 Mb/s for all gigabit models (ERS 4524GT, 4526GTX, 4548GT, 4524GT-PWR, 4526GTX-PWR and 4548GT-PWR).
Link / Activity	Green, Steady	The link established but no data activity exists.
	Green, Blink	The link is established and data activity exists (the blink rate indicates the level of activity).
	Green, Slow Blink	The software disabled the port.
	Amber, Steady	Port not used.
	Amber, Blink	Not applicable.
	Off	The port has no link or activity.

Table 17: SFP transceiver Port LED state indicators

Label	Color and Status	Description
In Use	Green, Blink	Not applicable.
	Green, Steady	The SFP port and the transmit port are active.
	Amber, Blink	Not applicable.
	Amber, Steady	SFP Installed—TX Port Inactive
	Off	No SFP transceiver is present.
Link / Activity	Green, Blink	Activity exists on the port.
	Green, Slow Blink	Software disabled this port.
	Green, Steady	The link is operating normally.
	Off	No link exists.

Table 18: SFP+ Port LED state indicators

Label	Color and Status	Description
TX / RX	Green, Steady	SFP+ detected and link established
	Green, Flashing	SFP+ established and transmit/receive activity detected.
	Amber, Steady	SFP detected and link established
	Amber, Flashing	SFP established and transmit/receive activity detected.
	Amber, Blinking	TX and RX blink together slowly to indicate a disabled port.
	Off	No SFP or SFP+ connection detected.

Note:

If you link two ports explicitly set for different speeds (for example one configured as 10BaseT and the other as 100BaseTX) the port link LED may indicate a link, but the switch does not establish a link. Connect ports using the same set speed or use auto-negotiation on each switch.

Set IP parameters for the Avaya Ethernet Routing Switch 4000 Series

After an Avaya Ethernet Routing Switch 4000 Series switch starts up and initializes all software modules, it begins switching operations.

To manage the switch using Telnet or SNMP, or to perform TFTP operations, you must set certain IP parameters. Also, if you intend to connect the switch to a stack configuration, you must assign additional parameters to ensure proper stack operation.

You must configure the following IP parameters for initial switch setup:

- IP address of the switch or stack
- subnet mask
- gateway address

Setting IP parameters using the console port and CLI Quickstart

To set IP parameters for a switch configured with the factory default settings, perform the following procedure using the console port and CLI Quickstart.

1. Connect a terminal to the console port of the switch.

   You can use any terminal or PC with an appropriate terminal emulator as the management station. The following table lists the parameters that you must use with any terminal emulation software used to connect to the switch.

Property	Value
Baud Rate	9600 bps
Data Bits	8
Stop Bits	1
Parity	None
Flow Control	None

   You require a console cable and connector to match the console port on the switch (DB-9 or RJ-45 depending on your model) to connect the terminal to the switch console port.

   Note:

   Autobaud is not supported. If you change the terminal speed and then reboot the unit, non relevant characters appear in the display. Workaround: Use only 9600 (baud rate) for terminal speed.

2. Set the terminal protocol on the terminal or terminal emulation program to VT100 and VT100/ANSI.
3. Connect to the switch using the terminal or terminal emulation application.
4. When the switch configuration is set to factory default the following screen appears. Enter the information requested at each prompt.

```
Welcome to the 4548GT-PWR setup utility. You will be
requested for information to initially configure for the
switch. When finished the information will be applied and
stored in the switch NVRAM.  Once the basic parameters are
configured, additional configuration can proceed using other
management interfaces. Press ^C to abort at any time.
```

   The in-band IP Address prompt line appears

```
Please provide the in-band IP Address[0.0.0.0]:10.127.232.30
```

   The in-band sub-net mask prompt line appears

```
Please provide the in-band sub-net mask[0.0.0.0]:
255.255.255.0
```

   The Default Gateway prompt line appears

Comments? infodev@avaya.com

```
Please provide the Default Gateway[0.0.0.0]:10.127.232.1
```

The Read-Only Community String prompt line appears

```
Please provide the Read-Only Community
String[**********]:******
```

The confirm Read-Only Community String prompt line appears

```
Please confirm the Read-Only Community
String[**********]:******
```

The Read-Write Community String prompt line appears

```
Please provide the Read-Write Community
String[**********]:*******
```

The confirm Read-Write Community String prompt line appears

```
Please confirm the Read-Write Community
String[**********]:*******
```

The Quick Start VLAN prompt line appears

```
Please provide the Quick Start VLAN <1-4094> [1]:
```

The Basic Switch parameters configuration confirmation appears

```
Basic switch parameters have now been configured and saved.
```

Note:

The ERS 4000 uses the default IP address of 192.168.1.1/24 if the switch does not get its IP address from another source.

Important:

Avaya Ethernet Routing Switch 4000 Series only supports the Avaya CLI, the old 'Bay Stack' menu interface is not supported on this product. When the switch is set to factory default parameters, the CLI Quickstart appears which enables you to set default IP information.

Setting IP parameters using the console port and CLI

If the switch is configured beyond factory default settings, perform the following procedure to set IP parameters using the console port and Command Line Interface (CLI):

1. Connect a terminal to the console port of the switch. You can use a terminal or PC with an appropriate terminal emulator as the management station. See Setting IP parameters using the console port and CLI Quickstart on page 61.
2. Set the terminal protocol on the terminal or terminal emulation program to VT100 or VT100/ANSI.
3. Connect to the switch using the terminal or terminal emulation application.
4. After the Avaya banner appears, press **CTRL + Y** to display the CLI prompt.
5. To enter the Global Configuration command mode, use the `enable` command.
6. At the prompt, enter the `configure terminal` command.
7. At the prompt, enter the `ip address` command to set the switch or stack IP address.

   Following is the **ip address** command syntax:

   ip address [stack | switch} <ip address> [netmak <subnet mask>] [default-gateway <gateway address>]

   The following table describes the **ip address** command parameters.

Parameter	Description
[stack | switch]	Use either the stack or switch key word to set the appropriate IP address.
<ip_address>	The IP address to be used.
<subnet_mask>	The subnet mask to be used.
<gateway_address>	The default gateway address to be used.

The IP configuration is now complete.

To continue configuration, use the appropriate CLI commands.

To disconnect from the switch, use the `logout` command.

Set IP parameters using IP.CFG file on a USB memory device

If the switch does not obtain an IP address through BootP, you can load the IP address and optionally new switch software and configuration from the USB memory device using the ip.cfg file.

Note:

The file name, ip.cfg, is case-insensitive.

See also Universal Serial Bus (USB) ports on page 40

If a properly formatted file exists on a USB port, the switch uses that ip.cfg as the first option, rather than the last. You can specify one or more of the optional parameters in the ip.cfg file. All of the parameters are optional.

The following table describes the ip.cfg file parameters:

Table 19: IP.CFG file

Parameter	Description
IP <A.B.C.D>	Specifies the IP address for the switch. Example: 192.168.22.1
Mask <xxx.xxx.xxx.xxx>	Specifies the network mask. Example: 255.255.255.0
Gateway <A.B.C.D>	Specifies the default gateway. Example: 181.30.30.254
SNMPread <string>	Specifies the SNMP read community string. Example: public
SNMPwrite <string>	Specifies the SNMP write community string. Example: private
VLAN <number>	Specifies the management VLAN-ID. Example: VLAN 1
USBdiag <string>	Specifies the filename of the diagnostic image to load from the USB. Example: ers4500/ ers4500_5.1.0.4.bin
USBascii <string>	Specifies the filename of the ASCII config file to load from the USB. Example: customer1.cfg
USBagent <string> NEXTIP, NEXTMask, and NEXTGateway	Specifies the filename of the agent image to load from the USB and specifies IPs for next boot. Example: ers4500/ers4500_5.2.0.0.img

Note:

If you download an ASCII file or diag/image with an Ip.cfg file, the specific ASCII file or diag/image must be present on the usb device.

The ip.cfg file loads information from the ASCII configuration file in order of precedence. For example, if you have an ip.cfg file with the following commands:

```
USBascii ip.txt
IP 181.30.30.113
Mask 255.255.255.0
Gateway 181.30.30.254
```

The stack IP becomes 181.30.30.113 no matter what IP address is in the ip.txt file.

If you have an ip.cfg file with the following commands:

```
IP 181.30.30.113
Mask 255.255.255.0
```

```
Gateway 181.30.30.254
USBascii ip.txt
```

The stack IP will be the IP address defined in the ip.txt file.

Note:

The ip.cfg file runs only on a base or stand-alone unit. The file cannot be more than 4096 bytes or contain more than 200 lines.

The following figure shows an example of an ip.cfg file.

```
#Any lines starting with a # are comments
#IP <xx.xx.xx.xx> specifies the IP address for the switch

IP 172.16.1.23

#Mask <xx.xx.xx.xx> specifies the network mask Mask 255.255.255.0
#Gateway <xx.xx.xx.xx> specified the default gateway Gateway 172.16.1.1
#SNMPread <string> specified the SNMP read community string SNMPread public
#SNMPwrite <string> specified the SNMP write community string SNMPwrite private
#VLAN <number> specified the management VLAN-ID VLAN 1
#USBdiag <string> specifies the filename of the diagnostic image to load (noreset)

USBdiag ers4500/ers4500_5.1.0.4.bin

#USBagent <string> specifies the filename of the agent image to load (noreset)

USBagent ers4500/ers4500_5.2.0.0.img

#USBascii <string> specifies the filename of the ASCII config file to load

USBascii customer1.cfg

#NEXTIP <xx.xx.xx.xx> specifies the IP address for the switch NEXTIP 172.16.1.23
#NEXTMask <xx.xx.xx.xx> specifies the network mask NEXTMask  255.255.255.0
#NEXTGateway <xx.xx.xx.xx> specified the default gateway NEXTGateway 172.16.1.1
```

Figure 22: ip.cfg file example

If the ip.cfg file specifies an image or agent code, the switch loads the software, even if the same version is already installed on the switch. Ensuring that the appropriate software is always upgraded on the units is the correct operation of ip.cfg.

Use the factory default command to reset the switch to the factory default after you insert the USB memory device in the USB port. The USB memory device must contain the properly formatted ip.cfg file in the root directory.

Resetting the switch to default settings

Perform this procedure to reset the switch to the factory default settings with the ACLI.

1. Enter `boot default`.
2. Enter `y` to confirm the reset.

   The switch restarts with factory default settings and attempts to read the ip.cfg file from an installed USB drive within three minutes. The Avaya Ethernet Routing Switch 4000 banner page appears while the switch retrieves the ip.cfg file.

Important:

If you have a console connected to the switch / stack, then while the system retrieves the ip.cfg file from the USB memory device, the Avaya banner page appears. If you use the serial console while the system is restarting or within the first few minutes after booting, then the switch will not load the IP.CFG file. If you want the switch to load the configuration using

IP.CFG, Avaya recommends not interact with the switch via the console port for a period of 3 minutes after booting the switch or stack. This is necessary to give the switch sufficient time to load the IP.CFG file and take appropriate actions. If the switch is also performing an automated update of the software, then this period of time will be increased as the switch will need to perform an automatic reboot during the IP.CFG process to load the designated software.

Checking the status of the download

Perform this procedure to check the status of the download three minutes after the Avaya banner page appears.

Press `CTRL` and `y` keys together.

Two possible responses indicate a pass or fail status.

- Pass: The system opens the first page of menu.
- Fail: The system prompts you for an IP address.

You can confirm the successful download with the **`show ip`** command. If the USB ip.cfg file download succeeded, all parameters read from the ip.cfg file show as present in the switch and become part of the runtime configuration. If there is an error parsing the ip.cfg file, a log entry provides an indication of the error encountered.

If you have disabled autosave, then save the configuration with the ACLI command, **`copy config nvram`**. After the successful ip.cfg file download from the USB memory device, you can manage the switch through Telnet and SNMP.

If you load any diagnostic or agent images with ip.cfg, the diagnostic or agent images need to be on the same USB memory device. Restart the system after you download the ip.cfg files. To ensure that diagnostic and agent image downloaded successfully, check in the system log or audit log. If the operation is successful, restart the switch or stack to display the new diagnostic and agent images.

If you download an ASCII file, you must enter the settings after the download. You do not need to restart the switch or stack if you download an ASCII file.

Set IP parameters using bootp

The Avaya Ethernet Routing Switch 4000 Series switches are configured to obtain a management IP address using BOOTP by default

If the switch is connected to the network and an appropriate bootp server is configured, then the server assigns an IP address to the switch.

To view the assigned and in-use IP addresses, connect to the switch console and enter the `show ip` command.

Setting IP parameters using the Web-based Management Interface

Prerequisite

Ensure that the switch has an IP address.

Procedure

To set IP parameters using the Web-based Management Interface, perform the following procedure.

1. Connect a computer to the switch through a data port using a standard RJ-45 network cable.
2. Open a Web browser on the attached computer and enter the management IP address and press Enter. For example, 192.168.1.1. The switch summary screen appears on your browser.
3. From the navigation tree, double-click **Administration**.
4. In the Administration tree, double-click **Quick Start**. The IP/Community/Vlan
5. In the IP/Community/Vlan work area, type a switch or stack IP address in the **In-Band Stack IP Address** dialog box.
6. In the **In-Band Stack Subnet Mask** dialog box, type a subnet mask.
7. In the **Default Gateway** dialog box, type an IP address.
8. In the **Read-Only Community String** box, type a character string.
9. In the **Re-enter to verify** dialog box immediately following the Read-Only Community String box, retype the character string from Step 8.
10. In the **Read-Write Community String** dialog box, type a character string.
11. In the **Re-enter to verify** dialog box immediately following the Read-Write Community String box, retype the character string from Step 10.
12. In the **Quick Start VLAN** dialog box, type a VLAN ID ranging from 1 to 4094.
13. Click **Apply**.

Important:

Changes that occur to IP parameters during this procedure can result in the loss of browser connectivity to the switch.

You must ensure that your IP address and subnet mask setting matches the IP address and subnet mask setting of the network where the switch resides.

Avaya Ethernet Routing Switch 4000 series stacking

The Avaya Ethernet Routing Switch 4000 Series provides fail-safe stackability. You can connect up to eight 4000 Series devices in a stack to provide uninterrupted connectivity for up to 400 ports. You can manage the stack as a single unit.

Stack connector

The stack connector is a component of the Avaya Ethernet Routing Switch 4000 Series back panel and consists of the Unit Select switch, Cascade Down connector, and Cascade Up connector. The stack connector is illustrated in the following diagram.

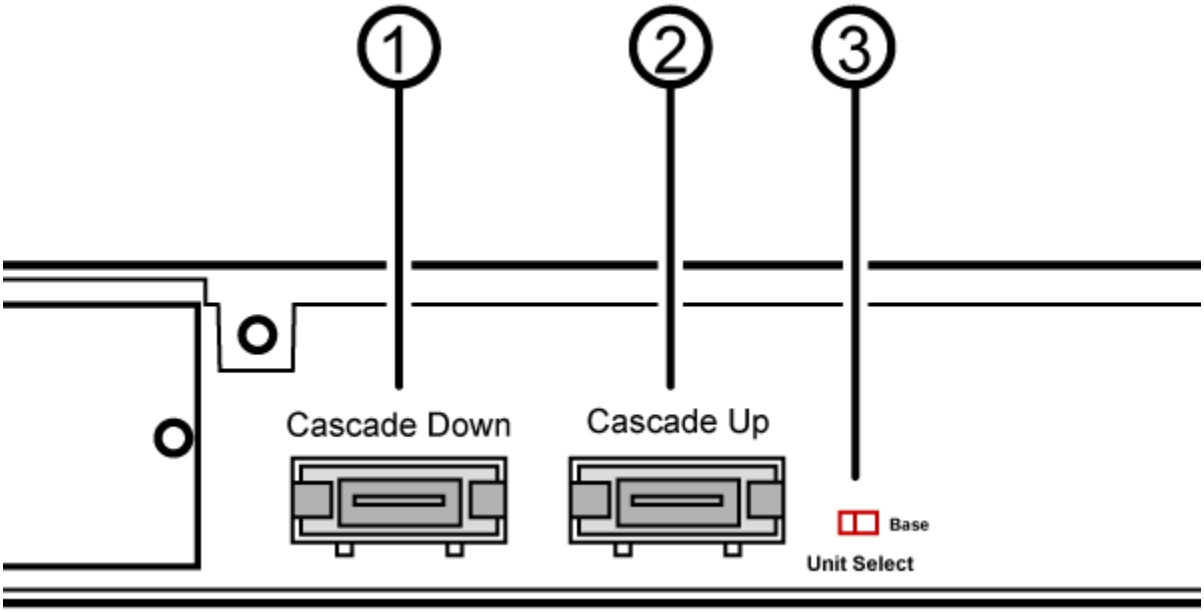

Figure 23: Stack connector

1. Cascade Down Connector
2. Cascade Up Connector
3. Base Unit Select Switch — used to designate the Base Unit in a stack. When set to the Right position, this unit acts as the Base Unit for the stack

Unit Select switch

Use the Unit Select switch to designate a switch in the stack as the base unit. Slide the Unit Select switch to the right to designate a switch as the base unit. You can designate only one

switch in a stack as the base unit; that is, with the switch in the base unit position. For all other switches in the stack, the Unit Select switch must be in the left position.

The base unit designation for a switch appears on the front panel LED display. See Table 15: Switch LED state indicators on page 58.

Cascade Down connector

Use the Cascade Down connector to connect a switch to the next unit in the stack through a cascade cable. Connect the other end of the Cascade Down cable to the Cascade Up connector of the next switch in the stack. A return cable from the Cascade Down connector of another unit to the Cascade Up connector of the first unit completes the stack connection. See Figure 24: Connecting cascade cables on page 71.

Important:

To create a stack connection, order the appropriate Avaya Ethernet Routing Switch 4000 Series cascade cables to ensure fail-safe stacking. A 1.5 foot stacking cable is included with the switch. For stacking three or more units (maximum eight units per stack), order the 5 ft, 10 ft, 14 ft or 16.4 ft. cables as applicable.

Cascade Up connector

The Cascade Up connector provides an attachment point that accepts a cascade cable connection from another unit in the stack. A return cable from the Cascade Down connector of one switch to the Cascade Up connector of an adjacent switch completes the stack connection.

The following figure illustrates a typical crossover connection configuration. Failure to use this configuration can result in loss of connectivity.

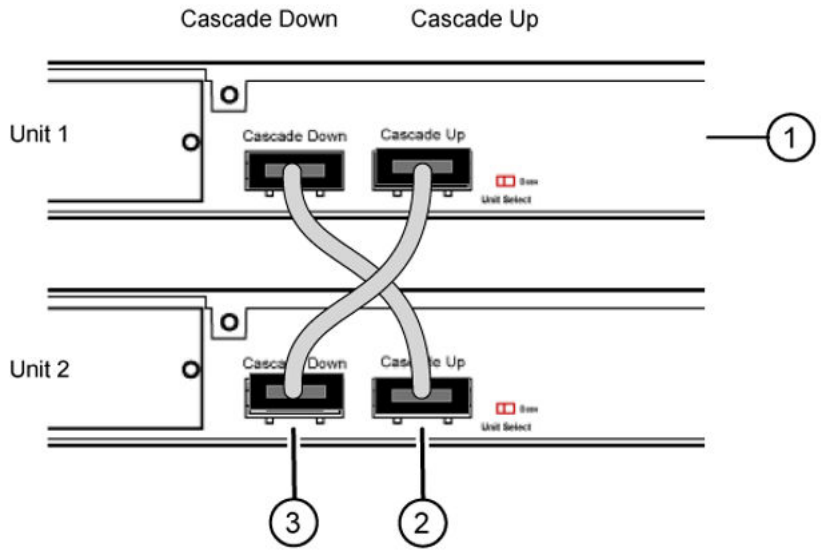

Figure 24: Connecting cascade cables

1. Base Unit
2. Cascade Cable (connected from Base Unit Cascade Down connector to Unit 2 Cascade Up connector)
3. Cascade Cable (connected from Unit 2 Cascade Down connector to Base Unit Cascade Up Connector)

Note:

In the Unit 1, set the Base unit select switch position to *Base*.

Initial installation unit number assignment

When you install the stack, the software automatically determines the physical order of all units in the stack according to the position of the base unit within the stack. Thereafter, the individual units maintain their original unit numbering, even if you change the position of one or more units in the stack.

For example, when you initially power the stack, the base unit becomes unit 1 and the unit that the base unit connects to (across the Cascade Down cable) becomes unit 2. The next unit is designated as unit 3, this continues until the maximum stack configuration (up to eight units) is reached. If another unit in the stack is designated as the base unit, the new base unit keeps its originally designated unit number in the stack.

Stack MAC address

When a switch participates in a stack configuration, stack initialization automatically assigns a stack MAC address. The stack MAC address is the base unit MAC address plus 1. If another

unit in the stack is assigned as the base unit, the new stack MAC address is the MAC address of the new base unit plus 1. The original stack IP address still applies to the new base unit.

Temporary base unit

If an assigned base unit fails, the next unit in the stack order automatically becomes the new temporary base unit. The LED display on the front panel of the temporary base unit changes to a steady amber state to indicate the change. When this happens, use the Unit Select switch to designate the temporary base unit as the base unit until you repair or replace the failed base unit.

You must designate a base unit because the automatic failover is only a temporary safeguard and, if the original unit rejoins the stack, it does not resume base unit status. Also, if the stack configuration loses power, the temporary base unit does not resume base unit status when power is restored.

Important:

If the temporary base unit is not assigned as the new base unit, and the temporary base unit fails, the next unit in the stack order becomes the temporary base unit. This process continues after successive failures until only two units are left in the stack.

Redundant cascade stacking

The Avaya Ethernet Routing Switch 4000 Series allows a stack of up to eight units into a dual-path cascade stack. If any single unit fails, or if a cable is accidently disconnected, other units in the stack remain operational.

In addition to increasing bandwidth, the software uses the cables to provide two paths between units. If one path is interrupted, the data travels over the remaining path at half the normal interswitch bandwidth.

The following figure shows a typical example of a stack configuration reacting to a failed connection in the stack configuration.

Comments? infodev@avaya.com

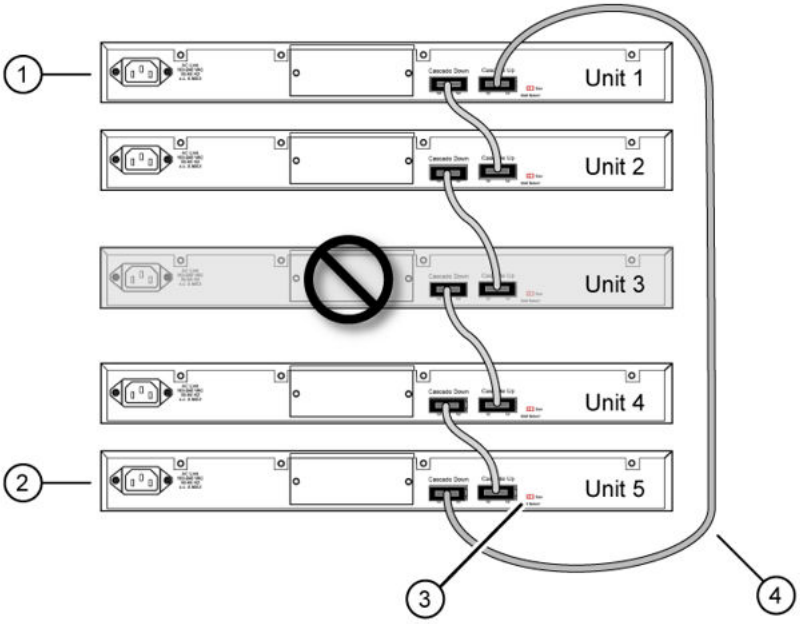

Figure 25: Redundant cascade stacking

1. Base Unit
2. Last Unit
3. Unit selector switch
4. Cascade Cable

In the example, the following occur:

- Unit 3 becomes nonoperational due to a unit failure, cable disconnection, or a loss of power.
- Units 2 and 4, directly upstream and downstream from Unit 3, sense the loss of link signals from unit 3. The software directs all the data to traverse the remaining path.
- The Cascade Down LED for Unit 2 and the Cascade Up LED for Unit 4 turn amber to indicate an error.
- The remaining stack units remain connected and continue to operate.

Replacing or adding a stack unit

To replace a failed stack unit or insert a new unit into a stack, perform this procedure.

Important:

Automatic Unit Replacement (AUR) for both configuration and software is enabled for all Avaya Ethernet Routing Switch 4000 Series platforms and software releases. This means that the agent code image, on a replacement unit, is automatically upgraded or downgraded

to match the software running on the stack. In addition, when a like-for-like replacement of a failed unit occurs, any port-specific configuration is restored .

1. Remove the failed switch from the stack.
2. Obtain a like-for-like replacement switch.
3. With the new unit turned off, physically insert the new unit in the stack and reconnect the stack cables.
4. Turn on the new unit. Depending on the software load on the replacement switch, it can automatically restart one or two times before joining the stack as a fully operational member.
5. Check the log file on the stack to ensure that the replacement unit correctly joined the stack. The log file displays AUR information messages.

If you replace the base unit, remember that the stack has elected a temporary base unit and the new unit does not automatically assume the base unit status. Configure the new unit as the base unit, using the Unit Select switch, and reset the Unit Select switches of the other stack members to nonbase units.

Remove a stack unit

If you remove a unit from the stack (to operate in stand-alone mode), the following switch configuration settings revert to those configured before the unit became a member of the stack:

- IP address
- Web, Telnet, and SNMP passwords
- SNMP community strings

Stack configurations

Because stack parameters are associated with the base unit, the physical stack order depends on the base unit position and whether you configure the stack cascade up (stack up) or cascade down (stack down). This designation depends on the stack cabling arrangement. Avaya recommends that you use Cascade Down configuration.

Cascade down

In a cascade down configuration, the base unit is located at the top of the stack. The system automatically numbers the physical units based on the designated base unit (unit 1). The cable connected to the Cascade Down connector of the base unit terminates in the Cascade Up connector on the next unit in the stack, which is located below the base unit. This next unit is designated unit 2. The stack is wired downward through the units and the system continues

to number in this manner throughout the stack. In this configuration, the base unit discovers the stack in a cascade down (stack down) direction. The following illustration demonstrates a typical cascade down (stack down) configuration.

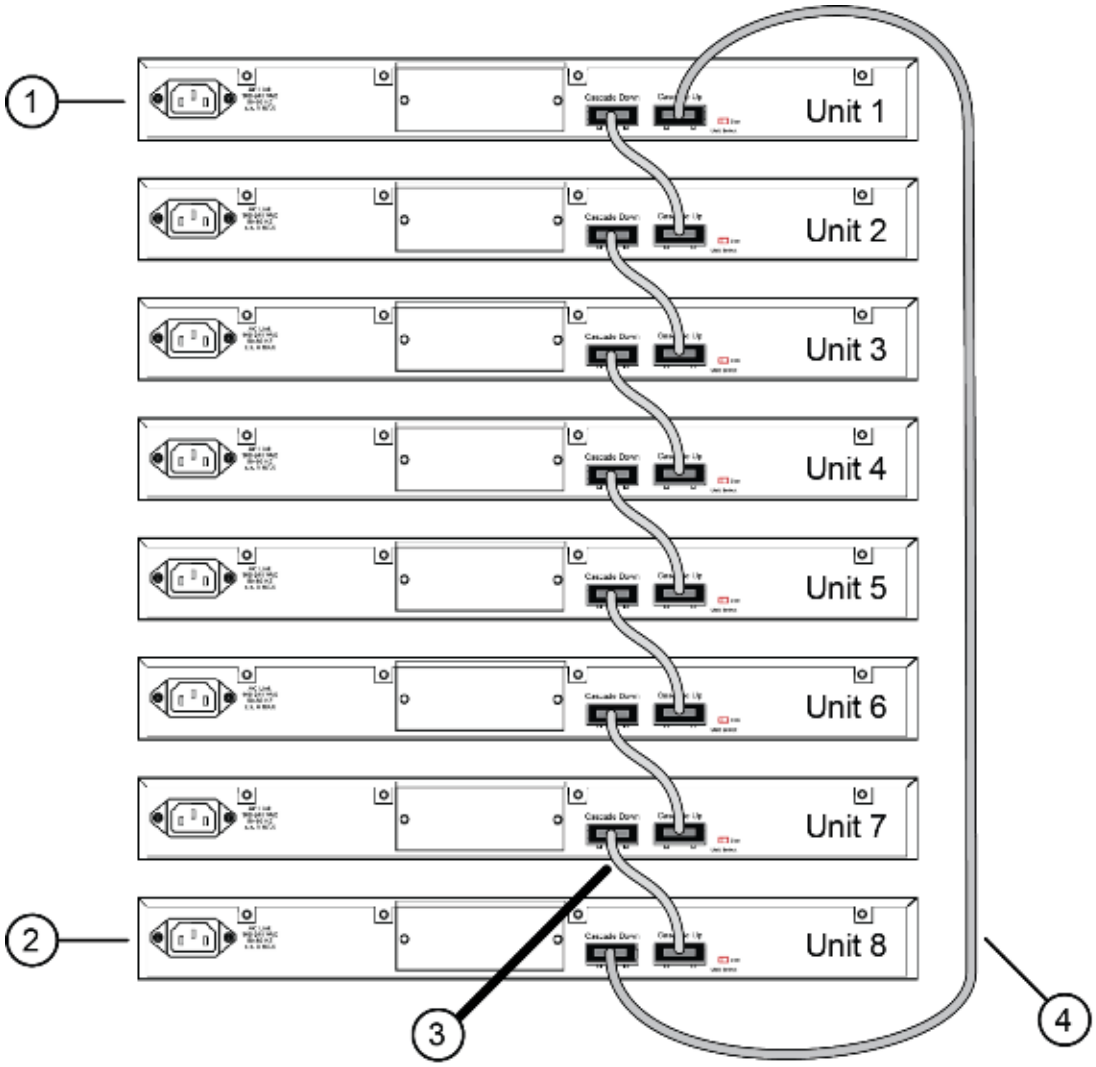

Cascade Down (Stack Down) configuration

1= Base unit

2= Last unit

3= Cascade/Stack Cable

4= Cascade/Stack Cable (Return cable to make stack resilient. Use longer stack cable if required.)

Figure 26: Cascade Down (Stack Down) configuration

Important:

Because many network management software packages assume a cascade down (stack down) configuration, Avaya recommends that you use a cascade down configuration.

Cascade up

In a cascade up (stack up) configuration, the base unit is physically the bottom unit in the stack. The cable connected to the Cascade Up connector of the base unit terminates in the Cascade Down connector of the last unit physically at the top of the stack. The stack is wired upward through the units and the system continues to number in this manner throughout the stack. In this configuration, the base unit discovers the stack in a cascade up (stack up) direction. The following illustration demonstrates a typical cascade up (stack up) configuration.

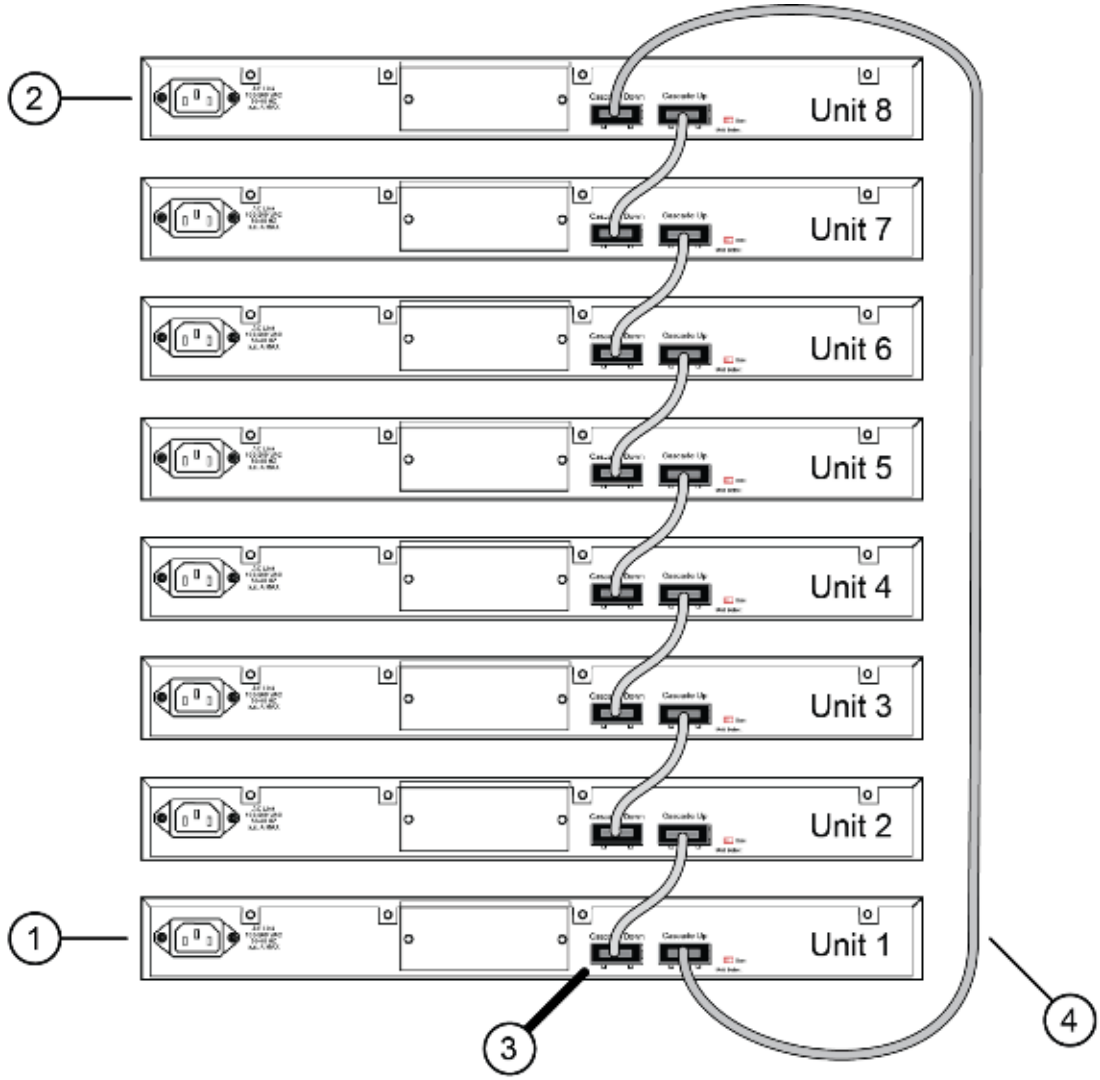

Cascade Up (Stack Up) configuration

1= Base unit

2= Last unit

3= Cascade/Stack Cable

4= Cascade/Stack Cable (Return cable to make stack resilient. Use longer stack cable if required.)

Figure 27: Cascade Up (Stack Up) configuration

Important:

Because many network management software packages use a cascade down (stack down) configuration, Avaya recommends that you use a cascade down configuration. See Cascade down on page 74.

Enterprise Device Manager always shows the physical view in a cascade down (stack down) configuration.

The following guidelines apply for stack configuration:

- When you apply power to the stack, the base unit initializes, typically within 60 seconds, and the entire stack powers up as a single logical unit.
- You can attach an RS-232 communications cable to the console port of any switch in the stack to establish a console connection.
- You can perform a software upgrade on the stack from any switch using a Telnet session, the Web-based Management Interface, or any SNMP-based management software.
- You can manage the stack using a Telnet session, Web-based Management Interface, or any SNMP-based management software through any stack switch port.
- When you stack two or more switches, use the 3-foot cascade max-return cable (AL4518002-E6) to complete the link from the last unit in the stack to the base unit.

Chapter 5: Translations of safety messages

Caution:

When you mount this device in a rack, do not stack units directly on top of one another. You must secure each unit to the rack with appropriate mounting brackets. Mounting brackets cannot support multiple units.

Important:

Achtung:

Wenn diese Einheit in einem Rack montiert wird, muß ein gewisser Abstand zur nächsten Einheit gelassen werden. Jede Einheit muß mit geeignetem Befestigungsmaterial gesichert werden. Das Befestigungsmaterial ist nicht für die gleichzeitige Befestigung mehrerer Einheiten geeignet.

Important:

Si vous installez le module dans une baie, ne l'empilez pas directement sur un autre. Chaque module doit être fixé à sa propre baie à l'aide des supports de montage appropriés. Ces supports ne sont pas conçus pour résister à plusieurs modules.

Important:

Precautión:

Cuando monte este dispositivo en un bastidor, no apile las unidades directamente una encima de otra. Cada unidad debe fijarse en el bastidor con las abrazaderas de montaje adecuadas. Las abrazaderas de montaje no están diseñadas para sostener varias unidades.

Important:

Se il dispositivo viene installato in un rack, non impilare le unità direttamente una sull'altra. Ogni unità deve essere fissata al rack con le staffe di montaggio appropriate. Le staffe di montaggio non sono state progettate per supportare più unità.

警告：在机架中安装此设备时，请勿将多个部件叠放在机架中。必须用合适的安装托架将各个部件固定在机架中。安装托架无法支撑多个部件。

注意：この装置をラックに設置する場合は、ラック内のユニットを直接積み重ねないようにしてください。各ユニットは専用の取り付けブラケットでラックに固定する必要があります。取り付けブラケットは複数のユニットを支えるようには設計されていません。

注意：在機箱中掛載此裝置時，請不要直接在機箱中的另一個裝置上直接堆放裝置。每一裝置都必須使用適當的掛載托架以固定在機架中。掛載托架不能用來支撐多個裝置。

Caution:

If you are not installing a module in the slot, be sure to keep the metal cover plate in place over the slot. Removing the cover plate impedes airflow and proper cooling of the unit.

Important:

Achtung:

Wenn Sie kein Modul im Schacht verwenden, muß die Metallabdeckung über dem Schacht montiert sein. Eine Entfernung der Abdeckung führt zu einer Verschlechterung der Luftzirkulation und damit zu einer nicht ausreichenden Kühlung der Einheit.

Important:

Si vous n'installez pas le module dans une baie, veillez à laisser la plaque métallique sur la baie. Si vous la retirez, l'aération du module ne peut pas s'effectuer correctement.

Important:

Precaution:

Si no instala ningún módulo en la ranura, asegúrese de mantener la placa de la cubierta de metal en la misma. Si la retira, impedirá que el aire circule y la unidad se refrigere adecuadamente.

Important:

Attenzione:

Se nello slot non vengono installati moduli, assicurarsi di mantenere la piastra di copertura metallica in sede sopra lo slot. La rimozione della piastra impedisce la ventilazione e il corretto raffreddamento dell'unità.

注意：この装置をラックに設置する場合は、ラック内のユニットを直接積み重ねないようにしてください。各ユニットは専用の取り付けブラケットでラックに固定する必要があります。取り付けブラケットは複数のユニットを支えるようには設計されていません。

注意：スロットにモジュールを取り付けない場合は、スロットにある金属製のカバープレートが外れないように注意してください。カバープレートを動かすと気流が妨げられ、適切なユニット冷却が行われなくなります。

注意：如果您未在插槽中安裝模組，請確定金屬殼板正確地蓋在插槽上。移除殼板會阻礙空氣流通以及裝置的適當冷卻度。

警告：如果您不打算在该插槽中安装任何模块，请务必使金属盖板正确地盖住该插槽。如果取下盖板，将妨碍通风及部件散热。

警告：この装置の電源は、電源コードを抜かない限り切断できません。緊急の場合にすばやく安全に切断できる場所に電源コードを接続してください。

警告：若要關閉此裝置的電源，拔掉插頭是唯一的方法。 爲了因應緊急狀況，請將電源線連接到可以快速插拔的地方。

Warning:

Disconnecting the AC power cord is the only way to turn off AC power to this device. Always connect the AC power cord in a quickly and safely accessible location in case of an emergency.

Important:

Warnung:

Das Gerät kann nur durch Ziehen des Netzsteckers ausgeschaltet werden. Schließen Sie das Netzkabel an einer Steckdose an, die in Notfällen schnell und sicher zugänglich ist.

Important:

Avertissement:

Pour mettre le module hors tension, vous devez impérativement déconnecter le cordon d'alimentation. En outre, vous devez dégager un espace minimal dans la zone de câblage pour pouvoir y accéder facilement en cas d'urgence.

警告：断开交流电源线是切断本设备的交流电源的唯一方法。交流电源线一定要连接到在紧急时刻可以快速安全地接触到的位置。

Important:

Advertencia:

Para apagar el dispositivo debe desenchufar el cable. Conecte siempre el cable de alimentación a una toma segura y de fácil acceso por si se produjera alguna situación de emergencia.

Important:

Avviso:

L'unico modo per disattivare questo dispositivo consiste nello scollegare il cavo di alimentazione. Collegare sempre il cavo di alimentazione ad una presa che sia facilmente e rapidamente accessibile in caso di emergenza.

Danger:

Use only power cords that have a grounding path. Without a proper ground, a person who touches the switch is in danger of receiving an electrical shock. Lack of a grounding path to the switch can result in excessive emissions.

Important:

Vorsicht:

Verwenden Sie nur Netzkabel mit Schutzerdung. Ohne ordnungsgemäße Schutzerdung besteht für Personen, die den Switch berühren, die Gefahr eines elektrischen Schlages. Eine nichtvorhandene Schutzerdung kann zu sehr starken Abstrahlungen führen.

Danger:

N'utilisez que des cordons d'alimentation équipés de trajet de mise à la terre. Sans mise à la terre adaptée, vous risquez de recevoir une décharge électrique en touchant le commutateur. Par ailleurs, l'absence de trajet de mise à la terre peut générer des émissions excessives.

Important:

Peligro:

Utilice únicamente cables de alimentación con toma de tierra. De lo contrario, al tocar el interruptor puede recibir una descarga eléctrica. Si no hay un circuito de toma de tierra en el enchufe, puede producirse un exceso de emisiones.

Important:

Pericolo:

Utilizzare esclusivamente cavi di alimentazione dotati di un percorso per la messa a terra. Senza un'adeguata messa a terra, chiunque tocchi lo switch corre il rischio di ricevere una scossa elettrica. L'assenza di un percorso per la messa a terra verso lo switch può comportare un eccesso di emissioni.

危険：接地経路を持つ電源コードを必ず使用するようにしてください。適切な接地がない状態でスイッチに触ると、感電する危険性があります。また、スイッチへの接地経路がないと、過度な放電を引き起こす可能性があります。

危险：请仅使用接地的电源线。如果电源线不接地或接地不当，接触交换机的人员可能会受到电击。如果交换机不接地，则可能导致放电过量。

Index

A

ASCII configuration file 64

C

Cable requirements 32
Checking status of download 67
CLI 63
Connect power to back panel 48
Connecting AC power 47
Console pin assignments 39

E

Electrostatic discharge 25
Environmental requirements 26
ESD 25

I

Initial IP parameters 61
Installation 29, 30, 33, 46
  Power supply 46
  Rack 30
  Shelf 29
  Small Form-factor Pluggable 33
  Table 29
Installing the Avaya Ethernet Routing Switch 25
ip.cfg 64

O

Operating Temperature 26

P

Package contents 28
PoE+ specifications 44
Power cord specifications 47
Power specifications 41
Power supply installation 46
PWR+ Power Supply 44

R

Rack installation 30
Redundant cascade stacking 72
Replacing or adding stack unit 73
Resetting switch to default settings 66
RJ-45 pin assignments 35–38
  4524GT 35
  4524GT-PWR 36
  4524GT-PWR PoE 37
  4524T-PWR PoE 37
  4526GTX 35
  4526GTX-PWR 36
  4526GTX-PWR PoE 37
  4526T 36
  4526T-PWR 37
  4526T-PWR+ 38
  4548GT 35
  4548GT-PWR 36
  4548GT-PWR PoE 38
  4550T 36
  4550T-PWR 37
  4550T-PWR PoE 37
  4550T-PWR+ 38
  4826GTS 36
  4826GTS-PWR+ 38
  4850GTS 36
  4850GTS-PWR+ 38
RPS 15 44

S

Setting IP parameters 61, 63, 64, 67, 68
  using bootp 67
  using console port and CLI 63
  using console port and CLI Quickstart 61
  using IP.CFG file on USB memory device 64
  using Web-based Management Interface 68
SFP 33
SFP installation 33
SFP removal 34
Shelf installation 29
Stack configuration 69, 70
  Cascade Down connector 70
  Cascade Up connector 70
  Stack connector 69
  Unit Select switch 69
Stack configurations 74, 76
  Cascade down 74

Cascade up 76
Stack down 74
Stack MAC address 71
Stack unit 73, 74
Remove a stack unit 74
Replacing or adding 73
Stack up 76
support 11
contact 11
Switch LEDs 49, 58, 59
Front panel LEDs 49
4524GT 49
4524GT-PWR 49
4526FX 49
4526GTX 49
4526GTX-PWR 49
4526T 49
4526T-PWR 49
4526T-PWR+ 49
4548GT 49
4548GT-PWR 49
4550T 49
4550T-PWR 49
4550T-PWR+ 49
4826GTS 49
4826GTS-PWR+ 49
4850GTS 49
4850GTS-PWR+ 49
Port LED state indicators 59
SFP port LED state indicators 59
SFP+ port LED state indicators 59
Switch LED state indicators 58
Switch platforms 7

T

Table installation 29
Temporary base unit 72
Translations of safety messages 79

U

Universal Serial Bus (USB) ports 40
USB ports 40

V

videos 10