INTUITY™ AUDIX® LX

Release 1.0

Integration with MERLIN LEGEND® and MERLIN MAGIX™ Communications Systems

Issue 1
May 2002

Copyright © 2002, Avaya Inc.
All Rights Reserved
Printed in U.S.A.

Notice

Every effort was made to ensure that the information in this book was complete and accurate at the time of printing. However, information is subject to change.

Disclaimer

Intellectual property related to this product (including trademarks) and registered to Avaya Inc. has been transferred or licensed to Avaya Inc.

Any reference within the text to Avaya Inc. or Avaya should be interpreted as references to Avaya Inc. The exception is cross references to Avaya Inc. or to books published prior to April 1, 2001, which may retain their original Avaya tittles.

Avaya Inc. formed as a result of Avaya's planned restructuring, design builds and delivers voice, converged voice and data, customer relationship management, messaging, multi-service networking and structured cabling products and services. Avaya Labs is the research and development arm for the company.

Preventing Toll Fraud

"Toll fraud" is the unauthorized use of your telecommunications system by an unauthorized party (for example, a person who is not a corporate employee, agent, subcontractor, or working on your company's behalf). Be aware that there may be a risk of toll fraud associated with your system and that, if toll fraud occurs, it can result in substantial additional charges for your telecommunications services.

Avaya Inc. Fraud Intervention:

If you suspect *that you are being victimized* by toll fraud and you need technical assistance or support, call the Technical Service Center's Toll Fraud Intervention Hotline at 1-800-643-2353.

Providing Telecommunications Security

Telecommunications security (of voice, data, and/or video communications) is the prevention of any type of intrusion to (that is, either unauthorized or malicious access to or use of your company's telecommunications equipment) by some party.

Your company's "telecommunications equipment" includes both this Avaya product and any other voice/data/video equipment that could be accessed via this Avaya product (that is, "networked equipment").

An "outside party" is anyone who is not a corporate employee, agent, subcontractor, or working on your company's behalf. Whereas, a "malicious party" is anyone (including someone who may be otherwise authorized) who accesses your telecommunications equipment with either malicious or mischievous intent.

Such intrusions may be either to/through synchronous (time-multiplexed and/or circuit-based) or asynchronous (character-, message-, or packet-based) equipment or interfaces for reasons of:

- Utilization (of capabilities special to the accessed equipment)
- Theft (such as, of intellectual property, financial assets, or toll-facility access)
- Eavesdropping (privacy invasions to humans)
- Mischief (troubling, but apparently innocuous, tampering)
- Harm (such as harmful tampering, data loss or alteration, regardless of motive or intent)

Be aware that there may be a risk of unauthorized intrusions associated with your system and/or its networked equipment. Also realize that, if such an intrusion should occur, it could result in a variety of losses to your company (including but not limited to, human/data privacy, intellectual property, material assets, financial resources, labor costs, and/or legal costs).

Your Responsibility for Your Company's Telecommunications Security

The final responsibility for securing both this system and its networked equipment rests with you – a Avaya customer's system administrator, your telecommunications peers, and your managers. Base the fulfillment of your responsibility on acquired knowledge and resources from a variety of sources including but not limited to:

- Installation documents
- System administration documents
- Security documents
- Hardware-/software-based security tools
- Shared information between you and your peers
- Telecommunications security experts

To prevent intrusions to your telecommunications equipment, you and your peers should carefully program and configure your:

- Avaya-provided telecommunications systems and their interfaces
- Avaya-provided software applications, as well as their underlying hardware/software platforms and interfaces
- Any other equipment networked to your Avaya products.

Avaya Inc. does not warrant that this product or any of its networked equipment is either immune from or will prevent either unauthorized or malicious intrusions. Avaya Inc. will not be responsible for any charges, losses, or damages that result from such intrusions.

Federal Communications Commission Statement

Part 15: Class A Statement. This equipment has been tested and found to comply with the limits for a Class A digital device, pursuant to Part 15 of the FCC Rules. These limits are designed to provide reasonable protection against harmful interference when the equipment is operated in a commercial environment. This equipment generates, uses, and can radiate radio-frequency energy and, if not installed and used in accordance with the instruction manual, may cause harmful interference to radio communications. Operation of this equipment in a residential area is likely to cause harmful interference, in which case the user will be required to correct the interference at his/her own expense.

Part 68: Network Registration Number. This equipment is registered with the FCC in accordance with Part 68 of the FCC Rules. It is identified by FCC registration number AS593M-13283-MF-E. Refer to "Federal Communications Commission Statement" in "About This Book" for more information regarding Part 68.

Canadian Department of Communications (DOC) Interference Information

This digital apparatus does not exceed the Class A limits for radio noise emissions set out in the radio interference regulations of the Canadian Department of Communications.

Le Présent Appareil Nomérique n'émet pas de bruits radioélectriques dépassant les limites applicables aux appareils numériques de la class A préscrites dans le reglement sur le brouillage radioélectrique édicté par le ministére des Communications du Canada.

Ordering Information

Call: Avaya Publications Center
Voice 1-800-457-1235 International Voice 317-361-5353
Fax 1-800-457-1764 International Fax 317-361-5355

European Union Declaration of Conformity

The "CE" mark affixed to the DEFINITY ONE equipment described in this book indicates that the equipment conforms to the following European Union (EU) Directives:

- Electromagnetic Compatibility (89/336/EEC**)**
- Low Voltage (73/23/EEC)
- Telecommunications Terminal Equipment (TTE) i-CTR3 BRI and i-CTR4 PRI

CE The "CE" mark affixed to the equipment means that it conforms to the above directives.

For more information on standards compliance, contact your local distributor.

Comments

Please send an email message to infodev@avaya.com with your comments about this document.

Contents

Contents iii

1 MERLIN LEGEND and MERLIN MAGIX Integration Overview 1-1

- Overview 1-1
- Purpose 1-1
- Switch Integration Concepts 1-2
  - Call Routing 1-2
  - Functionality Differences 1-5
- INTUITY AUDIX LX Messaging Services 1-5
  - Call Answer 1-5
  - Intuity AUDIX LX FAX Messaging 1-6
  - Voice or Multimedia Mail 1-6
  - Bulletin Board Service 1-7
  - Automated Attendant 1-7
    - Primary and Secondary Automated Attendant Use 1-8
      - Primary Implementation 1-8
      - Secondary Mode Implementation 1-9
    - Automated Attendant Use for Intuity AUDIX LX FAX Messaging or to Transfer a Caller Directly to a Mailbox 1-9
    - Automated Attendant Operation Schedule 1-9
    - Automated Attendant Operation Based on MERLIN LEGEND/MAGIX Status 1-10
    - Automated Attendant Operation Based on INTUITY AUDIX LX Business Schedule 1-10
    - Automated Attendant Holiday Operation 1-11
    - Automated Attendant Tenant Service Operation 1-11
    - Night Only Operational Mode Implementation on the MERLIN LEGEND/MAGIX System 1-11
    - General Call Handling by the Avaya INTUITY System: Routing Table 1-11
- Port Considerations 1-16
  - MERLIN LEGEND and MERLIN MAGIX Voice Port Requirements 1-16
  - Intuity AUDIX LX Limitations and Restrictions 1-18

Calling Group Use 1-18
Intuity AUDIX LX Port Administration 1-18
Additional Intuity AUDIX LX System Administration to Support Trunk Groups or Phantom Telephone Numbers 1-19

2 Planning the Integration 2-1

- Overview 2-1
- Purpose 2-1
- MERLIN LEGEND/MAGIX Integration Planning 2-2
  - Application Names 2-2
  - Number Plan 2-2
  - Voice Ports 2-3
  - INTUITY AUDIX LX Subscribers 2-3
  - Loop-Start Reliable Disconnect 2-3
  - Intuity AUDIX LX System Trunks 2-3
  - Group Coverage 2-4
  - Calling Group 2-4
  - Restrictions and Allowed and Disallowed Lists 2-5
  - Night Service 2-6
- Intuity AUDIX LX System Integration Planning 2-7
  - Digits in Dial Plan 2-7
  - INTUITY AUDIX LX System Parameters Features 2-9
  - Channel Information for Installation 2-9
  - Assign Service to Called Number 2-9
  - Routing Table 2-9
  - Business Schedules 2-13
  - Holiday Schedules 2-15

3 Implementing the Integration 3-1

- Overview 3-1
- Purpose 3-1
- Perform the Initial Intuity AUDIX LX System Installation 3-2
- Perform the Initial MERLIN LEGEND/MAGIX Administration 3-2
- Intuity AUDIX LX System Initial Administration and Test 3-3
- Perform Cut-to-Service Administration 3-5

- Perform Networking Administration and Test 3-6

4 Connectivity 4-1

- Overview 4-1
- Purpose 4-1
- Intuity AUDIX LX System Connections 4-2
  - Tip/Ring Connections 4-2
    - Connect Tip/Ring Circuit Cards Using an 885A Adapter 4-2
  - Connecting Serial Ports 4-4
    - Connecting Administration Ports Within 15 Meters (50 Feet), Same Power Outlet 4-5
    - Connecting Administration Ports More Than 15 Meters (50 Feet) with a Different Power Outlet 4-6
    - Connecting SMDR Ports More Than 15 Meters (50 Feet) Different Power Outlets 4-10
  - Networking 4-14
    - Connecting Low-Speed Digital Networking 4-15
  - Remote Maintenance 4-16
    - RMB Install 4-17
    - Remote Maintenance Modem Installation 4-17
  - Remote Access 4-19
    - Dedicated-Line Access 4-19
      - Connecting Dedicated Lines within 15 Meters (50 Feet) 4-20
      - Connecting Dedicated Lines beyond 15 Meters (50 Feet) 4-21
    - Remote Access (Dial-Up) Connections 4-25

5 MERLIN LEGEND and MERLIN MAGIX Switch Administration 5-1

- Overview 5-1
- Purpose 5-1
- Disconnect Signaling Reliability 5-2
- Group Coverage Member Assignments 5-3
- Group Calling Member Assignments 5-4
- Group Calling Trunk or Pool Assignments 5-5

- Hunt Type 5-6
- Group Coverage Receiver 5-8
- Group Type 5-9
- Allowed Lists 5-10
- Assign Allowed Lists to Intuity AUDIX LX Ports 5-11
- Disallowed Lists 5-13
- Assign Disallowed Lists to Intuity AUDIX LX Ports 5-14
- Assign Extensions for Night Service 5-16
- Assign INTUITY AUDIX LX Calling Group for Night Service 5-17

6 Intuity AUDIX LX System Administration 6-1

- Overview 6-1
- Administering the Intuity AUDIX LX System for Switch Integration 6-2
  - Administration Main Menu 6-2
  - Verifying the Country and Switch 6-2
  - Setting the MWI Device Assignments 6-3
  - Setting the Dial Plan Translations 6-4
    - Procedure 6-4
    - Examples 6-6
  - Setting MWI Parameters 6-7
- Stopping and Starting the Voice System 6-10
- Administering the Routing Table 6-11
  - Access the INTUITY AUDIX LX Screen 6-12
  - Entering the Mailboxes for Schedules 6-13
  - Entering the Business Schedules 6-13
  - Entering the Holiday Schedules 6-14
  - Entering the Routing Table 6-16

7 Integration Validation and Troubleshooting 7-1

- Overview 7-1
- Before You Begin 7-2
- Integration Validation 7-2
  - Validating the Tip/Ring Mapping 7-2
  - Viewing the Switch Integration Logs 7-2
  - Switch Integration Log Entries 7-3
    - CHDIP — Raw Data 7-4

SWINDIP — Parsed and Translated Data 7-4
MWIDIP— MWI Updates 7-6
■ Integration Troubleshooting 7-7

A System Security and Toll Fraud A-1

■ Protecting Your System A-1
Switch Security A-1
Security Tips A-1
Voice Messaging System Security A-2
Security Tips A-2
Automated Attendant System Security A-3
Security Tips A-4
■ Password Guidelines A-5
■ Switch Administration A-6
Restrict Outward Dialing A-6
Restrict Toll Areas A-6
Create Disallowed Number Lists A-6
Create Allowed Number Lists A-6
Restrict AMIS Networking Number Ranges A-7
■ INTUITY AUDIX LX Administration A-7
Outcalling A-7
Mailbox Administration A-7
Basic Call Transfer A-8
■ Detecting Toll Fraud A-9
Call Detail Recording A-9
Intuity AUDIX LX Traffic Reports A-9
■ Avaya Inc. Statement of Direction A-10
Avaya's Security Offerings A-11
Avaya Toll Fraud Crisis Intervention A-12
Avaya Corporate Security A-12

GL Glossary GL-1

IN Index IN-1

MERLIN LEGEND and MERLIN MAGIX Integration Overview

1

Overview

NOTE:
Some of the Intuity AUDIX LX screens are now Web-based administration and may not have been updated. Refer to the appropriate pages where you can access the Help topics for more information. Also, see the Configuration Note for your switch integration as some of the settings may have changed.

The Intuity AUDIX LX system supports messaging applications. The INTUITY AUDIX LX messaging application provides business-oriented, computerized messaging services.

This chapter explains how the INTUITY AUDIX LX system, and applications, and the MERLIN LEGEND® or MERLIN MAGIX™ Communications System work together.

Purpose

The purpose of this chapter is to provide an overview of the integration between the INTUITY AUDIX LX system and the MERLIN LEGEND/MAGIX system.

Switch Integration Concepts

Switch integration is the sharing of information between a voice messaging system and a switch to provide services to callers and subscribers. A fully integrated messaging system uses information sent from the switch to determine how to process each incoming telephone call. Callers reaching an integrated system for call answer do not have to enter telephone extension numbers to leave a message.

Integrating the Intuity AUDIX LX system and a MERLIN LEGEND/MAGIX system does not require any special equipment. The MERLIN LEGEND/MAGIX system sends call information by touch-tones over the same voice circuits used for call processing. The Intuity AUDIX LX system also interprets switch-hook flashes and call progress tones.

Call Routing

Call Routing (Figure 1-1) involves:

- Coverage path

  When a call is not answered because the called station is busy or not answered within a specific number of rings, the call is sent to the next point in the coverage path. This may be a secretary, an attendant, or the Intuity AUDIX LX system. The system may be the last or the only coverage point in a calling group.

- Coverage group

  Coverage for calls is provided by assigning a call *coverage group* as the last point of each extension's coverage path. The calling group for the Intuity AUDIX LX voice ports is then programmed as the receiver for the call coverage group.

  For group coverage, a special coverage group acts as a routing point for a group of extensions whose coverage is handled in the same way. Calls that are not answered by a member of the coverage group are sent to the Intuity AUDIX LX system by programming a Voice Messaging Interface (VMI) calling group as the receiver for the coverage group.

- VMI calling group

  A VMI calling group has the following characteristics:

  — Calls to the group extension ring at the first available station from the beginning of the list of stations. This is called linear hunt.

  — Trunks can be set to "ring in" to the calling group so that an incoming trunk call goes directly to the first available station.

— The calling group can be programmed as the receiver for a coverage group so that unanswered calls to the members of the coverage group automatically go to the first available station for coverage.

— An *integrated* VMI calling group provides call information to the voice port receiving each call. The call information allows the Intuity AUDIX LX system to determine if the:

- Call being processed was a direct or a coverage call
- Call was a direct inside call (to the calling group number) or a direct outside call (on one of the trunks assigned to ring into the calling group)
- Coverage is for one extension calling another, or for a call made from an outside (trunk) to an extension

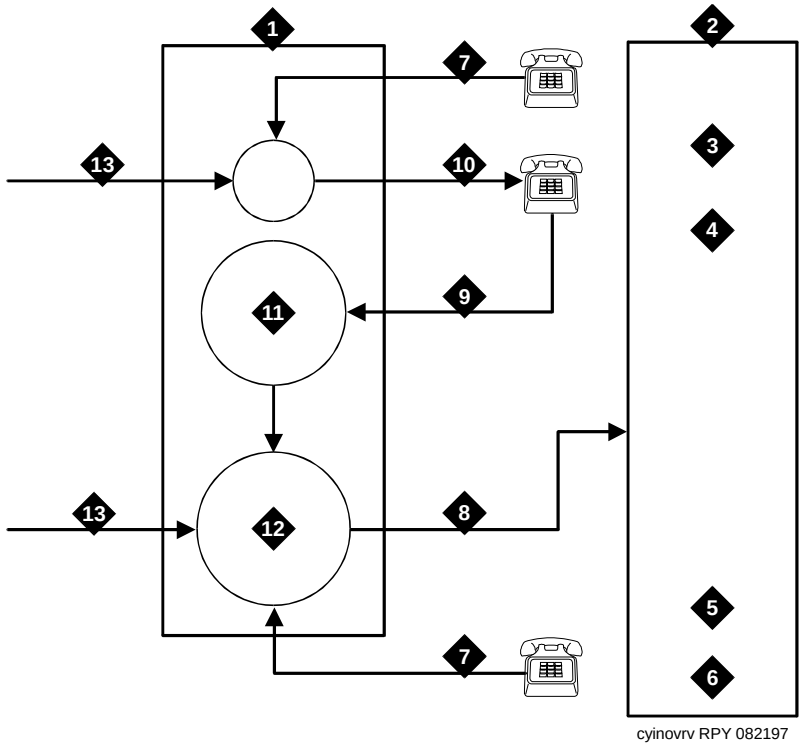

1. MERLIN LEGEND/MAGIX Communications System
2. Intuity AUDIX LX System
3. Coverage, Local
4. Coverage, Outside
5. Direct, Outside
6. Direct, Local
7. Local Call
8. Tip/Ring Station Line
9. Coverage Path
10. Station
11. Coverage Group
12. Integrated VMI Calling Group
13. Trunk Call

Figure 1-1. Call Routing

Functionality Differences

Integrating the Intuity AUDIX LX system with the MERLIN LEGEND/MAGIX system has the following differences from other supported switches:

- MERLIN LEGEND/MAGIX does not play a different personal greeting for busy or no answer, because the system does not provide the reason for the coverage call.
- High-speed digital networking for the AUDIX Digital Networking application is not supported.
- TCP/IP digital networking is supported.
- Providing appropriate automated attendant service using MERLIN LEGEND/MAGIX Night Service status *is* supported through a business schedule and the routing table.

INTUITY AUDIX LX Messaging Services

The INTUITY AUDIX LX application can be administered for:

- Call answer
- Intuity AUDIX LX FAX Messaging
- Voice or multimedia mail
- Bulletin boards
- Automated attendants

Call Answer

INTUITY AUDIX LX call answer allows the callers to:

- Leave a message
- Transfer to another extension
- Transfer to an attendant

When the extension originally called is busy or not answered, the MERLIN LEGEND/MAGIX system sends the telephone call to the Intuity AUDIX LX system with call information. This call information includes the covered extension number and whether the call was from an internal station or received on a trunk from outside. Based on this information, the Intuity AUDIX LX system can accept a message for the called extension's voice mailbox or provide other special processing.

The person called (subscriber) may provide a personal greeting for callers, allow callers to access prompts in another language, or select a standard system

greeting. After a caller leaves a message, the subscriber can retrieve the caller's message from any telephone if both internal and external access is set up. If the outcalling feature is active, the Intuity AUDIX LX system can place a telephone call to the subscriber's pager or another telephone to inform the subscriber that a new message has arrived.

Intuity AUDIX LX FAX Messaging

With the purchase of Intuity AUDIX LX FAX Messaging, the Intuity AUDIX LX system will accept the following message types:

- Voice messages only
- FAX messages only
- Voice messages with FAX

An associate with FAX permissions can use the same extension number to receive FAX and voice messages.

NOTE:
You will need to set up an automated attendant if your associates will be directing callers to use their extension for delivering FAXes. See below for additional information.

You may also set up a phantom telephone number on the MERLIN LEGEND/MAGIX system for callers to call directly to reach an AUDIX mailbox that collects all incoming FAXes. A phantom telephone number does not terminate at a physical station — it does not ring a telephone or a FAX machine. Instead, the MERLIN LEGEND/MAGIX system will direct the incoming telephone call to the Intuity AUDIX LX system ports. The INTUITY AUDIX LX application must be administered to provide the mailbox to receive the incoming telephone calls, and it should include activation of autoprint.

Voice or Multimedia Mail

Voice mail services allow subscribers to:

- Send voice, text, or FAX messages to other subscribers
- Listen to received messages
- Forward messages received with comments attached
- Reply to messages
- Send the same message to more than one person by using mailing lists

When a subscriber has "new" messages, the Intuity AUDIX LX signals the MERLIN LEGEND/MAGIX system to turn on the subscriber's message waiting indicator (MWI). Subscribers can retrieve messages from internal stations by dialing the extension for the calling group that contains the Intuity AUDIX LX

system voice ports or from outside by calling in on a trunk that is administered to ring at the Intuity AUDIX LX system voice port calling group.

The telephone call to retrieve or send messages is passed from the MERLIN LEGEND/MAGIX system to the Intuity AUDIX LX system with call information. This call information indicates that the call was received directly in the calling group and includes the calling extension or trunk number. If the MERLIN LEGEND/MAGIX system transmits a trunk number with the message retrieval call, the Intuity AUDIX LX system uses the INTUITY AUDIX LX call routing table to identify the telephone call as a message retrieval call and play the login prompts.

NOTE:
A Direct Voice Mail (DVM) button is programmable on MERLIN LEGEND/MAGIX systems, Release 3.0 or later. To forward a telephone call to a mailbox without ringing the extension, press the DVM button and enter the extension for the person being called. The Intuity AUDIX LX system will answer the call and use the entered telephone number to determine the correct mailbox.

Bulletin Board Service

Bulletin Board service (also called information service) allows you to record a message that callers can hear. A caller reaching a bulletin board hears this message and is then disconnected. If you want to provide multiple messages, use an automated attendant with bulletin boards.

A telephone call to a bulletin board is passed from the MERLIN LEGEND/MAGIX system to the Intuity AUDIX LX system with call information that allows the Intuity AUDIX LX system to provide information service processing based on the trunk or extension on which the call is received. Because of the use of the information from the MERLIN LEGEND/MAGIX system, you can configure different bulletin boards for external and internal audiences.

Automated Attendant

An automated attendant directs callers through a series of menu selections to reach a desired department, extension, or attendant. The Intuity AUDIX LX system greets callers with spoken prompts that guide them in pressing touch-tones to connect to their desired destination. If there is no answer or the desired extension is busy, the Intuity AUDIX LX system can provide a mailbox so the caller can leave a message or transfer the caller to an attendant.

The Intuity AUDIX LX system allows multiple automated attendants. Each automated attendant can have separate menus for day and night service and custom service for special hours and for holidays. Automated attendants may be used to answer all incoming telephone calls or to answer telephone calls that a receptionist is unable to answer.

The MERLIN LEGEND/MAGIX system passes the telephone call to the Intuity AUDIX LX system with call information such as the trunk number. The Intuity AUDIX LX system provides automated-attendant processing based on the trunk or number on which the call was received and on the administration on the INTUITY AUDIX LX call routing table. The call routing table can be used to route incoming calls and provide operation based on:

- Business schedule(s)
- Switch Night Service status
- Holiday schedule(s)

This section describes the various ways the INTUITY AUDIX LX automated attendant service can be set up to meet specific call handling needs.

Primary and Secondary Automated Attendant Use

A business can deploy automated attendant service in either primary or secondary mode.

- Primary mode

  In primary mode an automated attendant is expected to answer all incoming calls. The company receptionist answers calls that the automated attendant cannot answer and calls from people transferred for assistance from timeout or by dialing 0.

- Secondary (back-up) mode

  In secondary mode, the company receptionist is expected to answer as many calls as possible. The automated attendant service backs up the company receptionist by answering those calls that the receptionist is unable to answer.

Primary Implementation

When a business uses the INTUITY AUDIX LX automated attendant service in primary mode, calls are administered to ring immediately to the INTUITY AUDIX LX automated attendant service. This is done by administering the trunks to ring at a MERLIN LEGEND/MAGIX integrated VMI calling group whose members are the Intuity AUDIX LX system voice ports.

The MERLIN LEGEND/MAGIX system sends the trunk number to the Intuity AUDIX LX system for direct (noncoverage) external calls. The INTUITY AUDIX LX application routing table maps the trunk numbers received from the telephone system to the automated attendant mailbox numbers.

Customers may want to play different automated attendant greetings or handle calls differently during the day than night. This is done by specifying different automated attendant mailboxes for day and night in the automated attendant

routing table. The routing table also allows the administration of an automated attendant mailbox for handling calls during the alternate service hours.

Secondary Mode Implementation

Automated Attendant service may be used in secondary mode to back up the receptionist. The INTUITY AUDIX LX application identifies coverage calls for the receptionist and routes these calls to an appropriate automated attendant mailbox. Anytime an external coverage call is received, INTUITY AUDIX LX uses the appropriate automated attendant mailbox number in the routing table as the called party, taking into account holidays and time of day. If no matching entry is found, the called-party number received from the telephone system is used to provide standard Call Answer service.

This scheme allows a business to play different greetings and menus depending on whether the telephone system is in day or night mode, even when the automated attendant service is configured to operate in back-up mode.

Automated Attendant Use for Intuity AUDIX LX FAX Messaging or to Transfer a Caller Directly to a Mailbox

Subscribers who use their extensions to receive both FAX and voice messages will occasionally receive telephone calls with FAX tones. Incoming FAX telephone calls must be transferred to the Intuity AUDIX LX system so that the INTUITY AUDIX LX application can record the message. Subscribers on MERLIN LEGEND/MAGIX system cannot directly transfer the FAX telephone call to INTUITY AUDIX LX call answer. To receive the incoming FAX, subscribers will need to transfer the FAX call through an automated attendant. When the automated attendant answers, the subscriber must enter the extension number to reach the correct mailbox.

NOTE:
This automated attendant is also used for situations in which the person answering the telephone wants to transfer the caller directly to voice mail.

To administer this attendant, use call-answer treatment and to accept the extension as input. An alternate method is to provide one mailbox for all subscribers to use for FAX messages.

Automated Attendant Operation Schedule

Customers may use the INTUITY AUDIX LX automated attendant service to answer incoming calls 24 hours a day or at night only. Typically businesses are considered open during the day and closed during the night. The term *day* indicates the hours during which the business is open and *night* indicates the hours during which the business is closed.

The INTUITY AUDIX LX application can use its own weekly business schedules to determine hours for day and night operation or it can rely on the telephone system

to indicate when it should operate in day or night mode. The MERLIN LEGEND/MAGIX system can provide day or night status to the Intuity AUDIX LX system.

Some businesses require the automated attendant to play a different menu or handle calls slightly differently during lunch time. Other businesses may need a transition automated attendant to handle callers from other time zones. The alternate service hours feature provides a way to do this. This feature is independent of whether the business schedule is set to follow the telephone system night service status.

Automated Attendant Operation Based on MERLIN LEGEND/MAGIX Status

The MERLIN LEGEND/MAGIX system can be administered to switch from operation in day mode to night mode by a schedule administered on the system or by pushing a Night Service button on the attendant console. The advantage of linking Intuity AUDIX LX 's automated attendant service schedule to the MERLIN LEGEND/MAGIX system status is that the two are then guaranteed to be synchronized.

NOTE:
The MERLIN LEGEND/MAGIX system can be programmed to route calls differently when Night Service is in effect. This feature can be used to provide automated attendant service only when the MERLIN LEGEND/MAGIX system is in Night Service mode.

Automated Attendant Operation Based on INTUITY AUDIX LX Business Schedule

Some businesses separate some of their automated attendant operation from the telephone system's Night Service status and instead control it by the INTUITY AUDIX LX weekly business schedule. Each Intuity AUDIX LX system can have up to four weekly business schedules to accommodate departments with different hours of operation. In each schedule, the administrator can instruct the system to follow Night Service status or the entries in the schedule. This gives the flexibility needed to provide a weekly business schedule for automated attendant service and a Night Service status from the telephone system to control automated attendant service.

Businesses can also specify alternate service hours for additional flexibility. This allows businesses to handle calls more professionally during lunch time. It can also be used by an organization spread across several time zones to handle calls appropriately when one location is closed but the other is open. Businesses can use the MERLIN LEGEND/MAGIX system Night Service status to drive the automated attendant operation but still use the weekly business schedule for alternate service hours operation.

Automated Attendant Holiday Operation

Many businesses want to play different greetings and handle calls differently on holidays. The INTUITY AUDIX LX application allows four different holiday schedules. This allows the use of different schedules for different departments. Each holiday schedule can include up to 26 holidays and the automated attendant to be used for each of those holidays. It also allows administration of different automated attendant greetings and menu options for each holiday.

Automated Attendant Tenant Service Operation

Sometimes a single telephone system and voice messaging system is shared by different businesses or divisions of the same business. The INTUITY AUDIX LX application can provide superior automated attendant service in these cases by creating multiple main-level automated attendants and routing specific calls to each, depending on incoming trunk number.

Night Only Operational Mode Implementation on the MERLIN LEGEND/MAGIX System

Some businesses use automated attendant service only when the business is closed. The MERLIN LEGEND/MAGIX system can be administered to send calls to the INTUITY AUDIX LX calling group when the MERLIN LEGEND/MAGIX system Night Service feature is activated.

A business may want night time calls to go to a night service operator. Only when this operator is unable to answer these call are they redirected to the INTUITY AUDIX LX system. This can be implemented by specifying the night service operator as the Night Service answering position on the telephone system side and then covering this answering position with INTUITY AUDIX LX. The routing table can be used to map the night service answering position extension to an automated attendant mailbox.

General Call Handling by the Avaya INTUITY System: Routing Table

Under the INTUITY AUDIX LX application, three special tables are used to direct the calls. The matching and substitution sometimes come from the same table and sometimes from different tables (Figure 1-2).

- Routing Table

  The purpose of the routing table is to:

  - Specify different automated attendant menus for calls on different trunks
  - Specify different call handling by automated attendants based on a business schedule or the switch night service status
  - Provide specialized call handling for holidays

— Provide messaging login service for calls on specific trunks

The routing table can have up to 25 entries. Each entry has the following columns:

— Incoming Called Number (or range)

— Business Schedule

— Holiday Schedule

— Day Service Mailbox

— Night Service Mailbox

— Alternate Service Mailbox

Each incoming call is matched to the `Incoming Called Number` column in the routing table as follows:

1. If an incoming call is to one of the numbers in the table, further examination is made of `Business Schedule` and `Holiday Schedule` columns. Otherwise, the call is passed directly to INTUITY AUDIX LX application.
2. If the tag “login” is found in the `Business Schedule` column, the call information is altered to cause the call to be passed directly to voice mail and receive login service when it reaches the INTUITY AUDIX LX application.
3. The current date is matched against the `Date` column of the holiday schedule, if any, specified in the `Holiday Schedule` column of the routing table. If the date matches a holiday, the automated attendant extension specified in the `Mailbox` column of the holiday schedule is substituted for the original called number and the call is passed to the INTUITY AUDIX LX application.

   NOTE:
   The substitution is from the holiday schedule.

4. If a holiday match is not found, the current time is matched against the `Alternate Service Hours` columns for the current day of the week in the business schedule, if any, specified in the `Business Schedule` column of the routing table. If the current time is within the specified range, the automated attendant extension specified in the `Alternate Service Mailbox` column of the routing table is substituted for the original called number, and the call is passed to INTUITY AUDIX LX.

   NOTE:
   The substitution is based on the business schedule, but is from the routing table, not from the business schedule.

5. If no match is found, and the business schedule, if any, specified in the `Business Schedule` column of the routing table is set to follow the switch night service status, the automated attendant extension specified in the `Day Service Mailbox` or `Night Service Mailbox` of the routing table, depending on the switch night service status, is substituted for the original called number, and the call is passed to INTUITY AUDIX LX application.

   NOTE:
   The substitution is based on the business schedule, but is from the routing table, not from the business schedule.

6. If the current time is during the day service hours specified in the business schedule column of the routing table, the automated attendant extension specified in the `Day Service Mailbox` column of the routing table is substituted for the original called number, and the call is passed to INTUITY AUDIX LX. Otherwise, the automated attendant extension specified in the `Night Service Mailbox` column of the routing table is substituted for the original called number, and the call is passed to INTUITY AUDIX LX.

   NOTE:
   The substitution is based on the business schedule, but is from the routing table, not from the business schedule.

- Business Schedule(s)

  A maximum of four business schedules can be defined. The name or number of one of these business schedules is placed in the `Business Schedule` column of the routing table to associate the particular business schedule with a called number or range specified in the `Incoming Called Number` column of the routing table.

  Each business schedule has the following fields and columns:

  — Business Schedule (name)
  — Follow Switch Night Service Status (y/n)
  — Day of Week
  — Day Service Hours Start
  — Day Service Hours End
  — Alternate Service Hours Start
  — Alternate Service Hours End

  NOTE:
  These fields and columns are used for matching only. The automated attendant extensions associated with a match are taken from the routing table.

The Business Schedule name is arbitrary and can be changed to indicate the use of the specific schedule. It may contain up to eight letters or digits. The default names are “bus1” through “bus4”.

If the Follow Switch Night Service Status field is specified as **y**, the day service hours start and end times must all be blank. (The alternate service hours can still be specified.)

The Day of Week column is fixed. To specify night service 24 hours a day, leave the start and end times blank. To specify day service 24 hours a day, use **00:00** as the start time and **23:59** as the end time. Alternate service hours are also specified on a 24-hour clock.

- Holiday Schedule(s)

A maximum of four holiday schedules may be defined. Each holiday schedule can have up to 26 entries. The name or number of one of these holiday schedules is placed in the Holiday Schedule column of the routing table to associate the particular holiday schedule with a called number or range specified in the Incoming Called Number column of the routing table.

Each holiday schedule has the following fields and columns:

— Holiday Schedule (name)

— Holiday Name

— Date

— Mailbox

NOTE:
The Date column is used for matching. The automated attendant extension associated with a match is taken from the Mailbox column of this same table. The Holiday Name column is for documentation only.

The Holiday Schedule name is arbitrary and can be changed to indicate the use of the specific schedule. It may contain up to eight letters or digits. The default names are “hol1” through “hol4.”

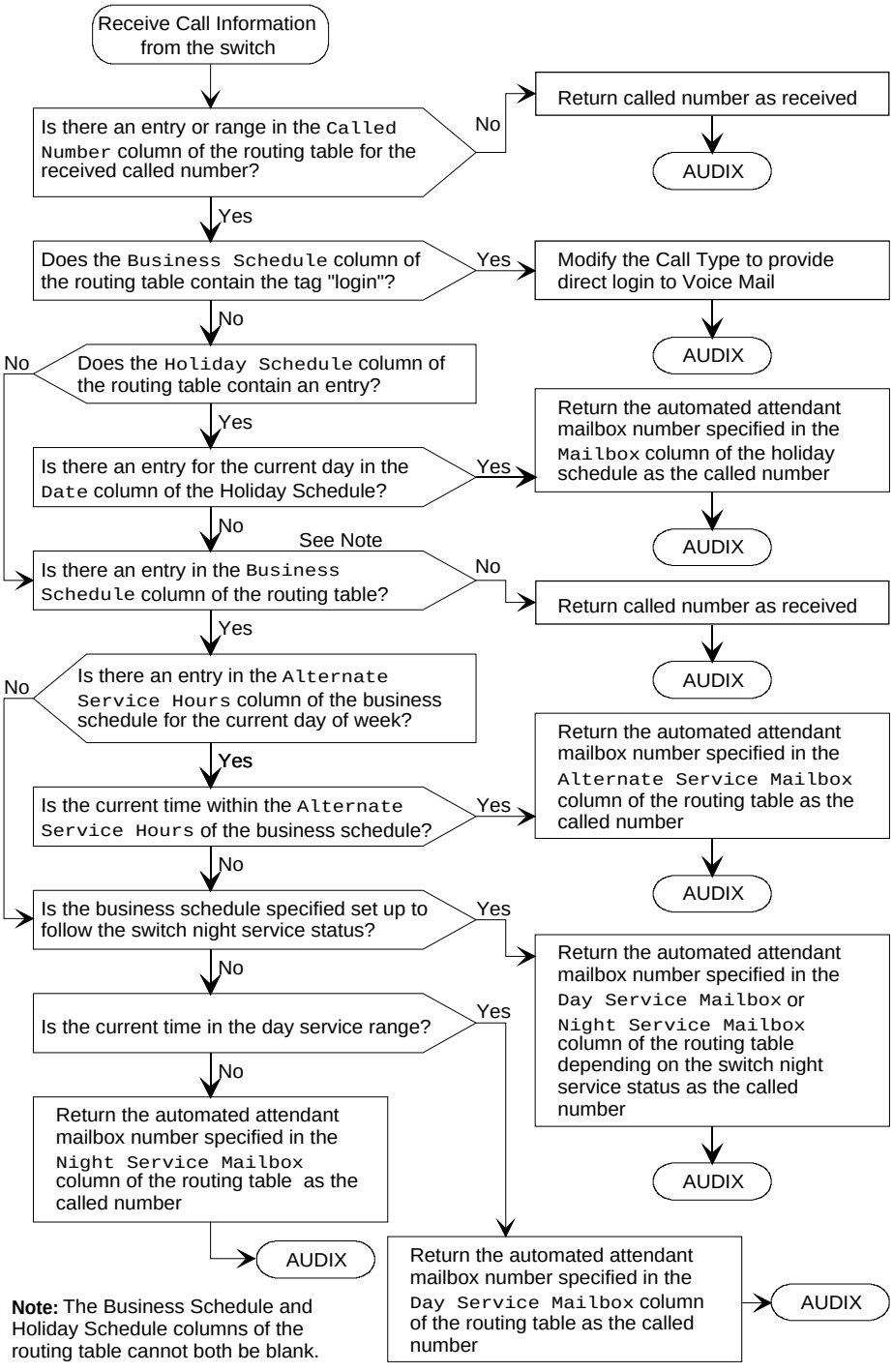

Figure 1-2. Routing Table Processing

Port Considerations

The following section presents considerations for port use and administration.

MERLIN LEGEND and MERLIN MAGIX Voice Port Requirements

The Intuity AUDIX LX system voice ports must be connected to tip/ring ports on a 012 or 016 tip/ring module. As a general rule, use:

- A separate 012 tip/ring module to a maximum of eight ports. Split port use over a number of 012 tip/ring modules as necessary, depending upon ring generation and blocking. Intuity AUDIX LX voice port use greater than four will require additional touch-tone receivers (TTRs).
- A separate 016 tip/ring module for every eight ports unless additional TTRs are available.

To connect to tip/ring modules, observe the following limitations:

- Ring generators
  - — 012 tip/ring modules

    Later version 012 tip/ring modules have built-in ring generators. Any module labeled 517G13 or higher has a built-in ring generator. Earlier versions do not and require 129C frequency generators (PEC 61498).
  - — 016 tip/ring modules

    016 tip/ring modules always have built-in ring generators.
- Ring blocking
  - — 012 tip/ring modules

    Four ports can be rung at any one time on 012 tip/ring modules. You can use a maximum of eight ports on 012 tip/ring modules.

    Some unused ports on the 012 tip/ring modules can be used for single line sets (SLS), fax machines, and modems, depending upon the number of Intuity AUDIX LX ports. The limitation is based on the number of ports that may require ringing at the same time. *All* unused ports can be used for devices *that will never ring* or for phantom stations (assigned extensions with no physical telephone set). Table 1-1 provides guidelines for 012 tip/ring module use.

Table 1-1. 012 Tip/Ring Module Ringing Capacity

INTUITY Voice Ports	Ringing SLS, Modems, FAX
Body	
8	0
7	0
6	1
5	2
4	2
3	3
2	3
1	4

— 016 tip/ring modules

You can use a maximum of eight ports, unless additional touch-tone receivers are available. If additional touch-tone receivers are available, the 016 tip/ring module can ring a maximum of 16 ports simultaneously.

- TTRs

Generally, one TTR is required for every two Intuity AUDIX LX voice ports, depending on the call traffic and applications. Remember that the level of system activity can make TTRs on other circuit modules unavailable for Intuity AUDIX LX voice port use.

— 012 tip/ring modules

Each 012 tip/ring module has two TTRs.

— 016 tip/ring modules

Each 016 tip/ring module has four TTRs.

The following will provide additional TTRs:

— 400 GS/LS/TTR (four TTRs per module)

— 400 LS/TTR (four TTRs per module)

— Other circuit modules including 008 OPT, 800 ICLID, and 800 DID (two TTRs per module for each type)

See *MERLIN LEGEND Communications System Release 5 Maintenance and Troubleshooting*, 555-650-140, for additional information about TTRs.

Intuity AUDIX LX Limitations and Restrictions

Configuration and the multi-application platform (MAP) in use for the integration can impose some limitations on the number and arrangement of voice ports:

- The MAP/5 series is limited to a maximum of 18 voice channels with up to 4 digital networking channels. (This is a physical space limitation.)
- For the MAP/40 and MAP/100 series, the MERLIN LEGEND/MAGIX calling groups can contain a maximum of 20 extensions for voice ports, resulting in a maximum of 20 voice channels supported for all applications connected to a single calling group. If more than one calling group is used, a maximum of 24 voice channels distributed among several groups is supported.

CAUTION:
All Intuity AUDIX LX voice ports must be in the same calling group.

Calling Group Use

The VMI group is limited to a maximum of 20 members for one group, with a maximum of 24 group members, total, for all groups, combined. Because the Intuity AUDIX LX system allows different applications and uses to share the same ports, the group members for a single VMI group can any service provided by the Intuity AUDIX LX system. A single calling group allows the Intuity AUDIX LX system to use idle channels to meet the immediate needs of any type of incoming call. The Intuity AUDIX LX system determines its resource allocation based upon current demand. All channels may respond to any call by identifying the number that has been called, associating it with the requested service, and providing the requested service.

For systems operating over 20 Intuity AUDIX LX ports, you will need to configure a second group that maps to the first group.

NOTE:
If you will be using night service, be sure to configure the group that will receive night service from the MERLIN LEGEND/MAGIX system first. The first group created will receive the information, not the first number on the list.

Intuity AUDIX LX Port Administration

Intuity AUDIX LX port administration allows the Intuity AUDIX LX system to provide the appropriate service to the incoming telephone call. This administration consists of two steps:

- Defining the extension associated with a physical port (channel) and the dialed number information service (*DNIS_SVC).

NOTE:
*DNIS_SVC is a specific value used in a field for the Intuity AUDIX LX system. This value is not the dialed number Information Service (DNIS) for T1 trunk service.

Additional Intuity AUDIX LX System Administration to Support Trunk Groups or Phantom Telephone Numbers

You will need to administer the INTUITY AUDIX LX Routing Table (**change auto-attend-routing-table**) as a part of the installation when the MERLIN LEGEND/MAGIX system will be sending the trunk number to the Intuity AUDIX LX system.

Planning the Integration

2

Overview

NOTE:
Some of the Intuity AUDIX LX screens are now Web-based administration and may not have been updated. Refer to the appropriate pages where you can access the Help topics for more information. Also, see the Configuration Note for your switch integration as some of the settings may have changed.

Before you integrate the MERLIN LEGEND® or MERLIN MAGIX™ Communications System with the INTUITY AUDIX LX system, you must plan the process. This chapter provides information about the information needed to integrate the two systems, including the settings on the MERLIN LEGEND/MAGIX system and the settings on the Intuity AUDIX LX system.

Purpose

The purpose of this chapter is to identify information needed for the installation. Without this information, the Intuity AUDIX LX system cannot be installed.

MERLIN LEGEND/MAGIX Integration Planning

To plan for the MERLIN LEGEND/MAGIX system side of the integration, complete the following information on the MERLIN LEGEND/MAGIX system forms. MERLIN LEGEND/MAGIX system forms are located in *MERLIN LEGEND Communications System, Release x.x, System Planning* where *x.x* is the release number.

- Application Names (Form 1)
- Number Plan (Forms 2a, 2b, 2c, 2d)
- Voice Ports (Form 2a)
- INTUITY AUDIX LX ® Subscribers (Form 2a)
- Loop-Start Reliable Disconnect (Form 2c)
- Intuity AUDIX LX system Trunks (Form 2c)
- Group Coverage (Form 7c for Release 3.0 or later; Form 6d for Release 2.0)
- Group Calling (Form 7d for Release 3.0 or later; Form 6e for Release 2.0)
- Restrictions and Allowed and Disallowed LIsts (Forms 6e, 6f, and 6g for Release 3.0 or later; Forms 6g, 6h, 6i for Release 2.0)
- Night Service (Form 9a for Release 3.0 or later; Form 7a for Release 2.0)

Application Names

All applications in use with a MERLIN LEGEND/MAGIX system are listed on Form 1, Pages 3 and 4 for documentation purposes. (They are *not* input to the switch.) To maintain Form 1, on Page 4:

1. Check the “Other” box.
2. Check a box below the “Other” box, and write INTUITY on the line provided.

Number Plan

The Intuity AUDIX LX system requires that the switch have a fixed-length number plan of three or four digits for extensions that have mailboxes or can be transferred to or from the Intuity AUDIX LX system. The Intuity AUDIX LX system will not work with a MERLIN LEGEND/MAGIX variable-length number plan or with a two-digit number plan. Also, the Intuity AUDIX LX system does not support configuring single-digit message retrieval numbers.

To renumber the MERLIN LEGEND/MAGIX extensions:

1. Depending on the numbering plan, check “3-Digit” or “Set Up Space” under the “Renumber System” heading on Form 2a.

2. Write the new extension numbers in the “Renumber To” column on Form 2a, Form 2b, Form 2c, and Form 2d as needed.

Voice Ports

Voice ports used for communication between the MERLIN LEGEND/MAGIX system and the Intuity AUDIX LX system must be assigned on a BTM-012 or BTM-016 module (Basic Telephone Module-12 or Basic Telephone Module-16). See “MERLIN LEGEND Voice Port Requirements” in Chapter 1, “MERLIN LEGEND/MAGIX Integration Overview.”

NOTE:
The OPX module cannot be used for voice ports connected to the Intuity AUDIX LX system.

To assign these ports, use Form 2a and:

1. Determine the logical ID (“Log. ID” column) for each port. Be sure the ports are located on BTM-012 or BTM-016 modules and that the configuration rules (see Chapter 4, ‘‘Connectivity’’) have been followed.
2. In the “Jack Type” column, check “B” for each Intuity AUDIX LX system port.
3. In the “Person, Location, or Function” column write INTUITY.

INTUITY AUDIX LX Subscribers

As a cross-check for assigning INTUITY AUDIX LX subscribers to coverage, on Form 2a check the “AUDIX Voice Power” column for each subscriber’s extension.

Loop-Start Reliable Disconnect

Loop-start CO lines used with a messaging system must have reliable disconnect to signal when the calling party has hung up. Without reliable disconnect, voice ports may remain engaged for long periods of time without being used. Reliable disconnect must be obtained from the central office and administered on the MERLIN LEGEND/MAGIX system for proper processing. To specify reliable disconnect, use Form 2c. Check “Yes” under “Reliable Disconnect?” at the top of the form.

Intuity AUDIX LX System Trunks

As a cross-check for assigning trunks to ring directly into the Intuity AUDIX LX system functions such as automated attendants, or bulletin boards, on Form 2c write one of the following identifiers in the “Function” column:

AA For Automated Attendant (you may want to include the mailbox number.)

VM For Voice Mail

BB For Bulletin Board (you may want to include the mailbox number)

NOTE:
Map trunks used for Lodging to phantom telephone numbers.

Group Coverage

All voice mail subscribers who receive call answer coverage from INTUITY AUDIX LX are organized into a coverage group. The coverage group is defined on the Group Coverage form (Form 7c for Release 3.0 or later; Form 6d for Release 2.0). The easiest place to get the subscriber extensions is from Form 2a, System Numbering — Station Jacks.

To set up the group coverage, use the Group Coverage form (Form 7c for Release 3.0 or later; Form 6d for Release 2.0) and:

1. At the top of the form, write **30/AUDIX** as the group number. The default group number is 30, but you may change it if required.
2. In the “Extension Nos.” area, list the extension of each subscriber. Subscribers should be marked on Form 2a by a check mark in the “AUDIX Voice Power” column. There is no limit to the number of extensions that can be included in a coverage group. If there is not enough room on the form, improvise by joining it to the next group on the form.
3. In the “Receivers” area, check “Calling Group.” The actual calling group is defined later.
4. For Release 2.0, in the “Group Coverage” section on each copy of Forms 4b, 4d, 5a, and 5b, check “Yes” and write in the coverage group number (default 30).

   NOTE:
   For Release 3.0 or later, Group Coverage is specified on Form 7c only.

5. For MERLIN LEGEND/MAGIX system, Release 3.0 or later, you can program a button for Direct Voice Mail (DVM) on individual sets using Forms 4b, 4d, 5a, and 5b.

Calling Group

You must have one Integrated VMI calling group that contain the voice ports that connect the MERLIN LEGEND/MAGIX system to the Intuity AUDIX LX system. All Intuity AUDIX LX voice ports must be in the same calling group. The calling group has been defined on a copy of the Group Calling form (Form 7d for Release 3.0 or later; Form 6e for Release 2.0). To define each calling group, follow these steps:

1. At the top of page 1 on the Group Calling form (Form 7d for Release 3.0 or later; Form 6e for Release 2.0), define the group number, a group name, and the factory-set number for the group. Typically, the 770 group is assigned to the voice mail system.
2. Under “Extensions,” list the extension number of each voice port that connects to the Intuity AUDIX LX system. A maximum of 20 voice ports can be listed.
3. Under “Trunks/Pools,” list each trunk that sends calls into the group. Include trunks used for automated attendants, bulletin boards, and Intuity AUDIX LX IVR applications.
4. On page 2, under “Hunt Type,” check “Linear.”
5. Under “Group Type” check “Integrated VMI”.

   The group that includes INTUITY AUDIX LX must be “Integrated VMI.”
6. For Release 3.0 or later, in the “Provide coverage for Coverage Group Numbers” section at the top of Page 1, enter the coverage group number from Form 7c.

   For Release 2.0, under “Coverage Group Receiver,” check “Yes,” and enter the coverage group number from Form 6d.
7. Use the default settings for the remaining options on page 2 of the Group Calling form (Form 7d for Release 3.0 or later; Form 6e for Release 2.0).

Restrictions and Allowed and Disallowed Lists

To prevent toll fraud, all extensions used for voice ports should be restricted at the highest practical level. The actual level of restriction depends on whether outcalling and AMIS networking are in use.

NOTE:
Intuity AUDIX LX FAX Messaging requires that AMIS be in use.

The following restrictions can be placed upon individual extensions as necessary to provide security:

- Outward restriction prevents outside calls from being made except those on an allowed list.
- Toll restriction prevents calls from being made outside the home area code except those on an allowed list.
- Up to eight allowed lists of up to 10 numbers each can be defined to allow otherwise restricted extensions to make specific calls. Each allowed list entry consists of an area code and/or exchange.
- Up to eight disallowed lists of up to 10 numbers each can be defined to prevent extensions from making specific calls. Each disallowed list entry consists of up to 11 digits including “wild card” digits.

One way of restricting outcalling on voice ports is to specify outward restriction with an allowed list. Each entry on an allowed list can be restricted to an area code and/or exchange.

For AMIS networking on voice ports, use outward restriction with an allowed list that is highly specific to the other switches that will be called.

Allowed Lists are defined on the Allowed Lists form (Form 6e for Release 3.0 or later; Form 6g for Release 2.0). Disallowed Lists are defined on the Disallowed Lists form (Form 6f for Release 3.0 or later; Form 6h for Release 2.0). You may also need to see the Call Restriction Assignments and Lists form (Form 6g for Release 3.0 or later; Form 6i for Release 2.0), Forms 5c and 5d, and individual telephone forms 4b, 4d, 4e, 4f, 5a, 5b, and 5c.

Night Service

If you want to deploy automated attendant service in primary mode during the day and night, you do not have to complete the Night Service - Group Assignment form (Form 9a for Release 3.0 or later; Form 7a for Release 2.0).

If you want to deploy automated attendant service in secondary mode during the day and primary mode during the night, complete the Night Service: Group Assignment form (Form 9a for Release 3.0 or later; Form 7a for Release 2.0) by specifying the operator extension number (for example, 100) and the Intuity AUDIX LX calling group (for example, 770).

Intuity AUDIX LX System Integration Planning

To plan for the Intuity AUDIX LX system side of the integration, complete the following the planning forms or provide the information to the installer:

- The number of digits in the dial plan (Worksheet A)
- The transfer/security parameters for the INTUITY AUDIX LX System-Parameters Features screen
- Routing Table (Worksheet B) if trunk lines or schedules will be in use
- Business Schedules (Worksheet C)
- Holiday Schedules (Worksheet D)

Worksheets A, B, C, and D are provided.

Digits in Dial Plan

The Intuity AUDIX LX system requires a fixed-length dial plan. You can use either a 3 or 4-digit dial plan as discussed in "Number Plan" on page 2-2. Write the number of digits on Worksheet A.

Worksheet A: Number of Digits in Dial Plan

Customer:

Prepared by:

Telephone Number:

Date:

Intuity AUDIX LX Location/Name

Number of Digits in the Dial Plan:_____

INTUITY AUDIX LX System Parameters Features

The following parameters should be set for the System-Parameters Features window for the INTUITY AUDIX LX application:

Transfer Type = basic

Transfer Restriction = subscribers

Covering Extension = system console or operator extension

Channel Information for Installation

For the Intuity AUDIX LX system to operate properly, it must know what extension has been assigned to each of its channels (voice ports) and how incoming calls on that channel are to be processed. For each channel, provide the extension number. Assign all channels that are part of an integrated VMI calling group to *DNIS_SVC for operation.

Assign Service to Called Number

See Chapter 6 in your Intuity AUDIX LX system installation book for a listing of services.

NOTE:
Calls not specifically routed elsewhere are routed to INTUITY AUDIX LX where the called numbers are next processed through the routing table. Trunk numbers must also be routed through the INTUITY AUDIX LX routing table.

Routing Table

The Routing Table is created from Worksheet B: ''Routing Table'' on page 2-12. There are a maximum of 25 rows in the routing table. This worksheet has the following columns:

- Incoming Called Number

  Enter the incoming called number or range of called numbers. When a call arrives, the system compares the incoming called number is compared to this column. If no match is found, it is routed to the INTUITY AUDIX LX application without changing the called number information. If a match is found, the remaining columns are examined for processing.

  NOTE:
  On the MERLIN LEGEND/MAGIX system, any trunk that rings directly into a calling group will deliver the “Trunk ID” (8nn) as the called number. Login in this column only if you want a login service instead of an automated attendant.

- Business Schedule

  Leave this column is blank or enter either “login” or the name of one of a business schedules.

  NOTE:
  The Business Schedule and the Holiday Schedule columns cannot both be blank.

  For “login,” the system provides voice mail service from the INTUITY AUDIX LX application. For a business schedule, the system checks the current date against any holiday schedule. If no holiday schedules applies, the system checks the business schedule to determine if the current time falls within the alternate hours for the current day of week. If a match is found, the automated attendant mailbox in the “Alternate Service Mailbox” column is substituted for the called number, and the call is passed to INTUITY AUDIX LX.

  If a match to the alternate hours is not found, the system checks the business schedule to determine if the switch night service status applies. If night service status applies, the system provides the automated attendant mailbox listed in the “Day Service Mailbox” or “Night Service Mailbox” column, depending on the switch night service status.

  If the business schedule does not follow the switch night service status, the system checks the day service hours for the current day of the week. If a match is found, the system provides the automated attendant mailbox in the “Day Service Mailbox” column. Otherwise, the automated attendant mailbox in the “Night Service Mailbox” column is substituted for the called number, and the call is passed to the INTUITY AUDIX LX application.

- Holiday Schedule

  Leave this column is either blank or enter the name or number of a holiday schedule.

  NOTE:
  The Business Schedule and the Holiday Schedule columns cannot both be blank.

  After checking the “Business Schedule” column for the specific tag “login,” the system checks the current date against any specified holiday schedule. If a matching date is found, the system provides the automated attendant mailbox from the “Mailbox” column of the holiday schedule. If no match is found, the business schedule (if any) is checked.

- Day Service Mailbox

  This column contains the automated attendant mailbox to be substituted for the called number if a match is found in the business schedule for day-service hours. This matching is performed after checking for a match on alternate-service hours.

- Night Service Mailbox

This column contains the automated attendant mailbox to be substituted for the called number if a *no* match is found in the business schedule for day-service hours. This matching is performed after checking for a match on alternate-service hours.

- Alternate Service Mailbox

  This column contains the automated attendant mailbox to be substituted for the called number if a match is found in the business schedule for alternate-service hours.

  NOTE:
  The mailboxes that are listed in the routing table and holiday schedules typically do not correspond to extensions on the telephone system. They are defined as automated attendant main menus. Administer these mailboxes before administering the routing table and holiday schedules.

Worksheet B: Routing Table

Customer:

Prepared by:

Telephone Number:

Date:

Intuity AUDIX LX Location/Name:

Incoming Called Number	Business Schedule	Holiday Schedule	Day Service Mailbox	Night Service Mailbox	Alternate Service Mailbox

Business Schedules

A business schedule allows you to specify different automated attendant service based on normal hours (day-service range) and, if needed, an alternate-service range (for example, lunch break). Day or night service can follow the switch night-service status.

The system will support a maximum of four business schedules. Each business schedule is associated with specific called numbers (which may be trunk numbers). Complete a copy of Worksheet C for each business schedule. This worksheet has the following fields and columns:

- Business Schedule

  Enter the name of the of the business schedule. Default names are “bus*n*” where *n* is 1, 2, 3, or 4. The business schedule can be referred to in the routing table by either its name or number. Do not use “login” as the name of a business schedule.

- Follow Night Service Status?

  If this field contains “n,” a match is made against day-service hours for the day of the week to determine whether day or night service should be provided.

  If this field contains “y,” leave the day-service hours blank. Night service is provided based on the switch night-service-status.

  NOTE:
  In either case, a match for the alternate service hours for the day of week is performed first.

- Day of Week

  This column lists the seven days of the week. It cannot be changed.

- Day Service Hours (Start Time and End Time)

  This pair of columns lists the start and end times for day service on the specified day of the week. Use 24-hour time (00:00 to 23:59) to specify start and end times. The end time must be later than the start time. For night service only, leave the columns blank. For day service only, specify start time as **00:00** and end time as **23:59**.

- Alternate Service Hours (Start Time and End Time)

  This pair of columns lists the start and end times for alternate service on the specified day of the week. Use 24-hour time (00:00 to 23:59) to specify start and end times. The end time must be later than the start time.

Worksheet C: Business Schedule

Customer:

Prepared by:

Telephone Number:

Date:

INTUITY Location/Name

Follow Switch Night Service Status (y/n)?

Day of Week	Day Service Hours		Alternate Service Hours	
	Start Time (hh:mm)	End Time (hh:mm)	Start Time (hh:mm)	End Time (hh:mm)
Monday				
Tuesday				
Wednesday				
Thursday				
Friday				
Saturday				
Sunday				

Holiday Schedules

A holiday schedule allows a business to specify appropriate greetings and automated attendant service based on holidays.

There can be a maximum of four holiday schedules, each with up to 26 holidays. Each holiday schedule is associated with specific called numbers (which may be trunk numbers). Complete a copy of Worksheet D for each holiday schedule. This worksheet has the following fields and columns:

- Holiday Schedule

  This field contains the name of the holiday schedule. Default names are "hol*n*" where *n* is 1, 2, 3, or 4. The holiday schedule can be referred to in the Routing Table by either its name or number.

- Holiday Name

  This column contains the name of the holiday. It is used only for documentation.

- Date

  This column contains the date (*mm/dd*) to be used for matching.

- Mailbox

  This column contains the automated attendant mailbox to be substituted for the called number if a match is found in the "Date" column. This mailbox does not need to correspond to an extension on the switch.

Worksheet D: Holiday Schedule

Customer:

Prepared by:

Phone Number:

Date:

INTUITY Location/Name

Holiday Name	Date (mm/dd)	Mailbox

Implementing the Integration

3

Overview

NOTE:
Some of the Intuity AUDIX LX screens are now Web-based administration and may not have been updated. Refer to the appropriate pages where you can access the Help topics for more information. Also, see the Configuration Note for your switch integration as some of the settings may have changed.

This chapter explains how to implement the integration between the MERLIN LEGEND® or MERLIN MAGIX™ Communications System and the Intuity AUDIX LX system. It includes all steps necessary to get the system up and running for both acceptance testing and cut-to-service.

Purpose

The purpose of this chapter is to present the tasks that need to be completed and the order in which they must be completed.

Perform the Initial Intuity AUDIX LX System Installation

Complete the following tasks before performing any MERLIN LEGEND/MAGIX administration:

1. Complete the Intuity AUDIX LX installation procedures.

   Use the information in Chapter 4, ‘‘Connectivity’’, to connect the hardware platform to the MERLIN LEGEND/MAGIX system and to any adjunct equipment.

2. Complete the Intuity AUDIX LX software installation procedures.

Perform the Initial MERLIN LEGEND/MAGIX Administration

NOTE:
You do not need a separate FAX telephone number for INTUITY AUDIX LAX’S Intuity AUDIX LX FAX Messaging.

Complete the following tasks on the MERLIN LEGEND/MAGIX Communications System:

1. Renumber the MERLIN LEGEND/MAGIX system for a consistent 3 or 4-digit dial plan. Use the renumbering information on Forms 2a, 2b, 2c, and 2d. See Chapter 5, ‘‘MERLIN LEGEND and MERLIN MAGIX Switch Administration’’, for the MERLIN LEGEND/MAGIX system programming procedure.

2. Assign an integrated VMI calling group with linear hunt type, as defined on the Group Calling form (Form 7d for Release 3.0 or later; Form 6e for Release 2.0). See Chapter 5, ‘‘MERLIN LEGEND and MERLIN MAGIX Switch Administration’’ for the MERLIN LEGEND/MAGIX system programming procedure.

   NOTE:
   Do not assign the trunks to the integrated VMI calling group or set the integrated VMI calling group as the receiver for the coverage group at this time. The Intuity AUDIX LX system is not set up to handle the calls yet, and callers will not receive the correct service.

3. Assign the tip/ring voice ports to the integrated VMI calling group defined on the Group Calling form (Form 7d for Release 3.0 or later; Form 6e for Release 2.0). See Chapter 5, ‘‘MERLIN LEGEND and MERLIN MAGIX Switch Administration’’, for the MERLIN LEGEND/MAGIX system programming procedure.

Intuity AUDIX LX System Initial Administration and Test

NOTE:
Some of the Intuity AUDIX LX screens are now Web-based administration and may not have been updated. Refer to the appropriate pages where you can access the Help topics for more information.

Perform basic initial administration on the Intuity AUDIX LX system:

1. Administer the Intuity AUDIX LX switch interface page on the Intuity AUDIX LX system. Be sure to enter the extension length (dialed digits) into the Dial Plan Translation page.

   NOTE:
   Administer the routing table for any trunk lines that will require voice mail service. These trunks should be listed in the routing table with "login" in the business schedule column. Do not administer the remaining fields in the routing table at this time.

2. Map Channels for acceptance testing and acceptance test the channels.
3. Administer the Intuity AUDIX LX system for INTUITY AUDIX LX acceptance testing. ok.
4. Use the MERLIN LEGEND/MAGIX system programming procedure to add the extensions for the test telephones. See Chapter 5, ''MERLIN LEGEND and MERLIN MAGIX Switch Administration''.

   Administer two test telephones near the MERLIN LEGEND/MAGIX Communications system for testing or select two subscribers from the stations listed on Form 2a as having INTUITY AUDIX LX call coverage and defined by Forms 4b, 4d, 5a, or 5b. The coverage group is defined on the Group Coverage form (Form 7c for Release 3.0 or later; Form 6d for Release 2.0).

   NOTE:
   If you are using actual subscribers and working during business hours, request that the MERLIN LEGEND/MAGIX system administrator select the subscribers so that business will not be disturbed.

5. Administer the two test subscribers or use the same two subscribers from the subscriber list on the Intuity AUDIX LX system and complete the testing.
6. Enter the Business Schedules, Holiday Schedules, and Routing Table defined on Worksheets B, C, and D into the Intuity AUDIX LX system if the system will be using automated attendants.

NOTE:
The business and holiday schedules must be entered before they can be referenced in the routing table. Enter the routing table last.

a. Enter the Business Schedules using the information on Worksheet C. See Chapter 6, "Intuity AUDIX LX System Administration".

b. Enter the Holiday Schedules using the information on Worksheet D. See Chapter 6, "Intuity AUDIX LX System Administration".

c. Enter the Routing Table using the information on Worksheet B. See Chapter 6, "Intuity AUDIX LX System Administration".

Perform Cut-to-Service Administration

Complete the following tasks for cut-to-service:

1. If you are installing the INTUITY AUDIX LX application, add the subscribers to the Intuity AUDIX LX system. Use the administer test subscribers procedure in Chapter 7 of the Intuity AUDIX LX installation procedures and administer the subscribers for the INTUITY AUDIX LX application. For additional information about subscriber administration, see Intuity AUDIX LX *Messaging Solutions Release 4 Administration*, 585-310-564.
2. Connect the coverage group to the integrated VMI calling group. See Chapter 5, ‘‘MERLIN LEGEND and MERLIN MAGIX Switch Administration’’. The calling group was defined on the Group Calling form (Form 7d for Release 3.0; Form 6e for Release 2.0).
3. Direct incoming calls on specified trunks to the calling group(s). See Chapter 5, ‘‘MERLIN LEGEND and MERLIN MAGIX Switch Administration’’. The calling group was defined on the Group Calling form (Form 7d for Release 3.0; Form 6e for Release 2.0).
4. Make test calls to each subscriber, but do not answer the calls. The Intuity AUDIX LX system should provide call-answer service for these calls.
5. While listening to the first subscriber’s greeting, enter [*], [8], another subscriber’s extension, and [#].

   Verify that the call is transferred to the second subscriber.
6. Make test calls directly from the subscriber stations to the calling group. The Intuity AUDIX LX system should provide voice mail service for these calls.
7. Determine your next step:

   a. If the system will use networking, continue with the next section, “Perform Networking Administration and Test”.

   b. If the system will not use networking, complete Chapter 16, “Cut-to-Service Procedures”, in the Intuity AUDIX LX installation procedures to finish the installation.

Perform Networking Administration and Test

Once the system is fully administered for the INTUITY AUDIX LX subscribers and operational, you can administer the networking applications. Complete the following tasks:

1. Administer and test the networking. Use the following chapters from the Intuity AUDIX LX installation book as they apply to the system:
   - Chapter 12, if the system will use AMIS analog networking
   - Chapter 13, if the system will use INTUITY AUDIX LX Digital Networking
   - Chapter 15, if the system will use InterNet Messaging
2. Complete Chapter 16, “Cut-to-Service Procedures”, in the Intuity AUDIX LX installation book to finish the installation.

Connectivity

4

Overview

This chapter contains information that describes the hardware components and connections used to connect a Intuity AUDIX LX system and a MERLIN LEGEND® or MERLIN MAGIX™ Communication system. This chapter includes:

- Configuration descriptions that explain each of the components required to establish a link
- Wiring diagrams that show the different hardware, physical connections, and cables used for connection

NOTE:
The numbers in the wiring diagrams do not show the order of connection. Follow the written instructions to make the connections.

Read the information in this chapter *before* you attempt to connect the components.

Purpose

The purpose of this chapter is to provide instructions to connect the Intuity AUDIX LX System, the MERLIN LEGEND/MAGIX Communications System, and other adjuncts.

Intuity AUDIX LX System Connections

Use the information and diagrams in this section to connect or verify the connections for the Intuity AUDIX LX system with a MERLIN LEGEND/MAGIX switch.

CAUTION:
See "MERLIN LEGEND and MERLIN MAGIX Voice Port Requirements" in Chapter 1, "Switch Integration Overview," and follow the carrier restrictions when cabling to the MERLIN LEGEND Communications system.

Tip/Ring Connections

To connect to tip/ring circuit cards (AYC10, AYC29, or AYC30):

- Use an 885A adapter to connect to RJ11C connections, or
- Connect to a type-104B connecting block

Connect Tip/Ring Circuit Cards Using an 885A Adapter

Connect tip/ring circuit cards using an 885A adapter as follows:

1. Make sure that the line pairs were run individually (RJ11C).
2. Use a type-885A adapter to consolidate the six individual line pairs into three pairs in each of two cables (Figure 4-1).
3. Remove the protective coating paper from the adhesive strip on the back of the 885A adapter and attach the 885A adapter in a convenient place.
4. Use the supplied 6-conductor modular cables between the IVC6 circuit card and the adapter.
5. Use the supplied 2- or 4-conductor modular cables between the adapter and the RJ11C modular jacks.
6. Label the connections in the space provided on the 885A adapter.

NOTE:
The label on the 885A adapter refers to an IVP6. This should be interpreted as an IVC6 (AYC10, AYC29, or AYC30).

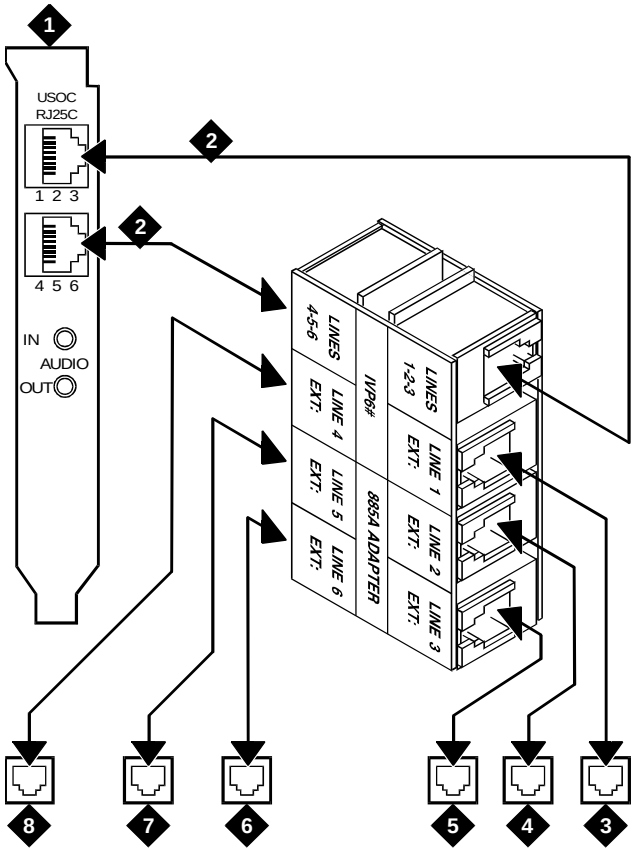

1. IVC6 or NGTR (AYC10, AYC29, or AYC30)
2. D6AM-87 Cord
3. D2R-29: RJ11C Line 1
4. D2R-29: RJ11C Line 2
5. D2R-29: RJ11C Line 3
6. D2R-29: RJ11C Line 6
7. D2R-29: RJ11C Line 5
8. D2R-29: RJ11C Line 4

Figure 4-1. Connecting Tip/Ring Circuit Cards Using an 885A Adaptor

Connecting Serial Ports

The Intuity AUDIX LX system communicates with various devices through serial ports. Serial ports are required for:

- MERLIN LEGEND/MAGIX administration
- Remote maintenance modem
- Call Accounting System (optional)
- Customer administration terminal(s) (optional)

Only MERLIN LEGEND/MAGIX administration and the remote maintenance modem must be connected to specific ports. Make any other connections to available ports. The Intuity AUDIX LX system has two built-in ports, COM1 and COM2. COM2 is reserved for remote maintenance use and can not support any other use. If two or more devices are required, include a multi-port serial card in the configuration.

- Built-in serial port 1 (COM1, tty00) is used for administering the MERLIN LEGEND/MAGIX system.
- Built-in serial port 2 (COM2, tty01) is used for the remote maintenance modem or the remote maintenance board (RMB). The port is reserved for the use of remote maintenance and cannot be used for any other purpose.
- The preferred order of connection of the devices is:
  - MERLIN LEGEND/MAGIX administration
  - Remote maintenance modem
  - Call Accounting System (SMDR) (optional)
  - Customer remote access terminals or modems (optional)

If the MERLIN LEGEND/MAGIX system is within 15 meters (50 feet) of the Intuity AUDIX LX system, and both systems share the same power outlet, a direct connection can be made between the MERLIN LEGEND/MAGIX administration and optional SMDR ports and the Intuity AUDIX LX system ports.

If the MERLIN LEGEND/MAGIX system is farther than 15 meters (50 feet) from the Intuity AUDIX LX system, or both systems do not share the same power outlet, data cables from the MERLIN LEGEND/MAGIX system administration ports and optional SMDR ports to the Intuity AUDIX LX system ports have to be extended with Z3A2 ADU cable drivers. Two Z3A2 ADU interface units are required for each cable, one at each end.

The remote maintenance modem must be collocated with the Intuity AUDIX LX system and must be connected to serial port 2.

Optional customer access terminals may be collocated with the Intuity AUDIX LX system processor and directly connected to the next available serial port, or one

or more modems may be connected to the next available serial port(s) for dial-in access.

Connecting Administration Ports Within 15 Meters (50 Feet), Same Power Outlet

This method is used only when the MERLIN LEGEND/MAGIX system and the Intuity AUDIX LX system are located within (15 meters) 50 feet of each other and share the same power outlet.

The following parts are required:

- DB-9S to DB-25P adapter
- 355AF adaptor
- D8W-87 modular cord

See Figure 4-2. Connect the MERLIN LEGEND/MAGIX Communications System Admin port and the Intuity AUDIX LX system Serial Port 1 (COM1) by following these steps:

1. Connect one end of a D8W-87 modular cord to the Admin (lower) jack of the MERLIN LEGEND/MAGIX Communications System.
2. Connect the other end of the D8W-87 modular cord to a 355AF adapter.
3. Connect to the 355AF adapter to the 25-pin end of the DB-9S-to-DB-25P adapter and then connect the 9-pin end of that adapter to port COM1 (tty00).

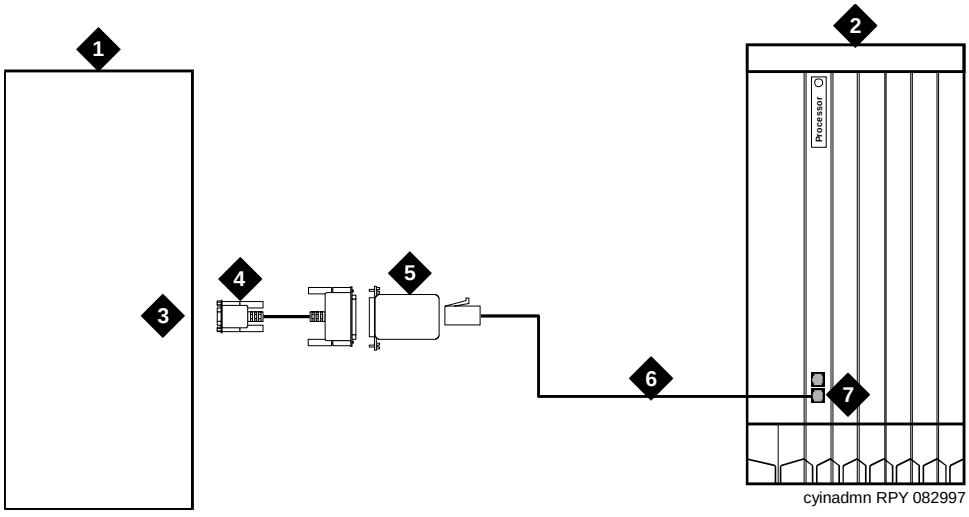

1. Intuity AUDIX LX System
2. MERLIN LEGEND/MAGIX Communications System
3. COM1 Port
4. DB-9S to DB-25P Adapter
5. 355AF Adapter
6. D8W-87 Modular Cord (Maximum Distance 50 Feet)
7. ADMIN Port

Figure 4-2. Connecting Admin Ports Between Systems within 50 Feet that Share Same Power Outlet

Connecting Administration Ports More Than 15 Meters (50 Feet) with a Different Power Outlet

This method is used only when the MERLIN LEGEND/MAGIX system and the Intuity AUDIX LX system are more than 15 meters (50 feet) apart or do not share the same power outlet (Figure 4-3).

NOTE:
The MERLIN LEGEND/MAGIX system does not support out-of-building operation of the Intuity AUDIX LX system.

The following parts are required:

- DB-9S to DB-25P adapter
- 355AF adapter
- Three D8W-87 modular cords
- M7-U87 crossover cable
- Two (2) Z3A2 ADUs

- Two M8AJ-87 cables
- D8AM-87 modular crossover cable
- Two (2) 400B2 adapters
- Two (2) D6AP-87 modular cords
- Two (2) 248B adapters
- Two (2) 2012D power transformers

NOTE:
The combination of a Z3A2 ADU and an M8AJ-87 cable is equivalent to a Z3A4 ADU. You must order both pieces (one of each).

NOTE:
Inside wire must be 4-pair, suitable for data; type-3 UTP data cable or better.

See Figure 4-3. Connect the MERLIN LEGEND/MAGIX Communications System Admin port and the Intuity AUDIX LX system serial port 1 (COM1) by following these steps:

1. Connect one end of a D8W-87 modular cord to the Admin (lower) modular jack on the MERLIN LEGEND/MAGIX Communications System.
2. Connect the other end of the D8W-87 modular cord to a 355AF adapter.
3. Connect the 355AF adapter to one end of an M7-U87 crossover cable.
4. Connect the other end of the M7-U87 crossover cable to the matching end of an M8AJ-87 cable.
5. Connect the other end of the M8AJ-87 cable to the matching connector on a Z3A2 ADU.
6. Connect one end of a D8W-87 modular cord to the modular jack marked **WALL** on the Z3A2 ADU.
7. Connect the other end of the D8W-87 modular cord to the modular jack end of a D8AM-87 crossover cord.
8. Connect the modular plug end of the D8AM-87 crossover cord to the matching modular jack on a 400B2 adapter.
9. Plug the 400B2 adapter into the wall jack leading to the Intuity AUDIX LX system site.
10. Connect one end of a D6AP-87 modular cord to the 400B2 adapter.
11. Mount a 248B adapter to a 2012D power transformer.
12. Connect the other end of the D6AP-87 modular cord to the 248B adapter.
13. Plug the 2012D power transformer into an AC power outlet.

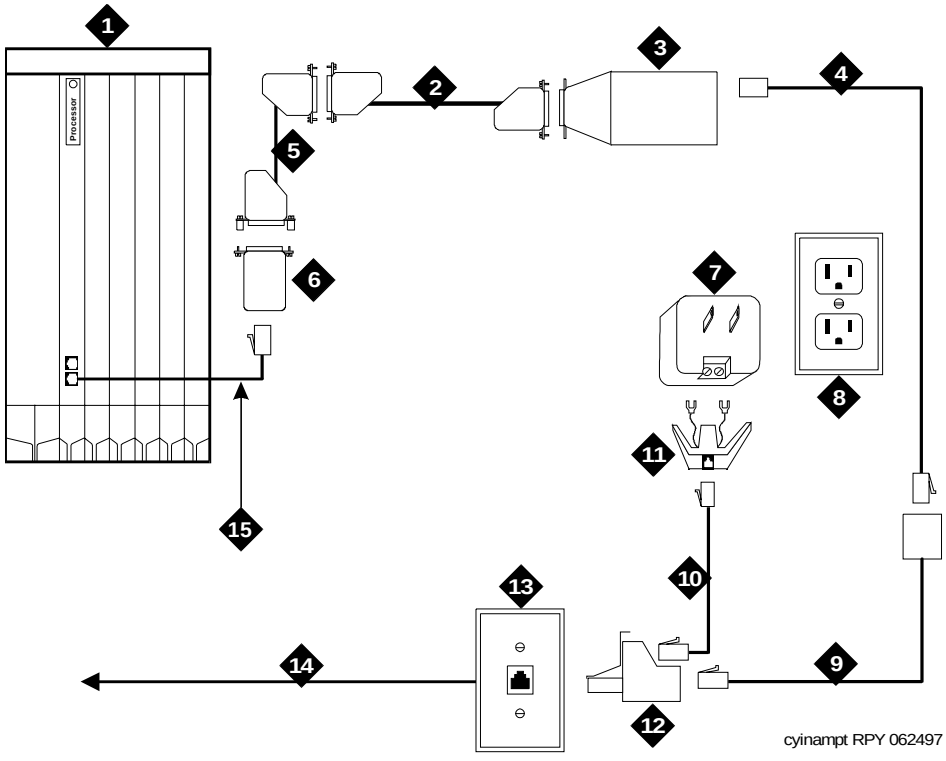

1. MERLIN LEGEND/MAGIX Communications System
2. M8AJ-87 Cable
3. Z3A2-ADU
4. D8W-87 Modular Cord
5. M7-U87 Crossover Cable
6. 355AF Adapter
7. 2012D Power Transformer
8. AC Power Outlet
9. D8AM-87 Crossover Cable
10. D6AP-87 Modular Cord
11. 248B Adapter
12. 400B2 Adapter
13. Wall Jack
14. Building Wiring to Intuity AUDIX LX System Site
15. D8W-87 Modular Cord (Maximum of 50 Feet) Connect to lower Admin jack.

Figure 4-3. Connecting Admin Ports More Than 15 Meters (50 Feet) with a Different Power Outlet

Go to the Intuity AUDIX LX system site to continue the connection. See Figure 4-4.

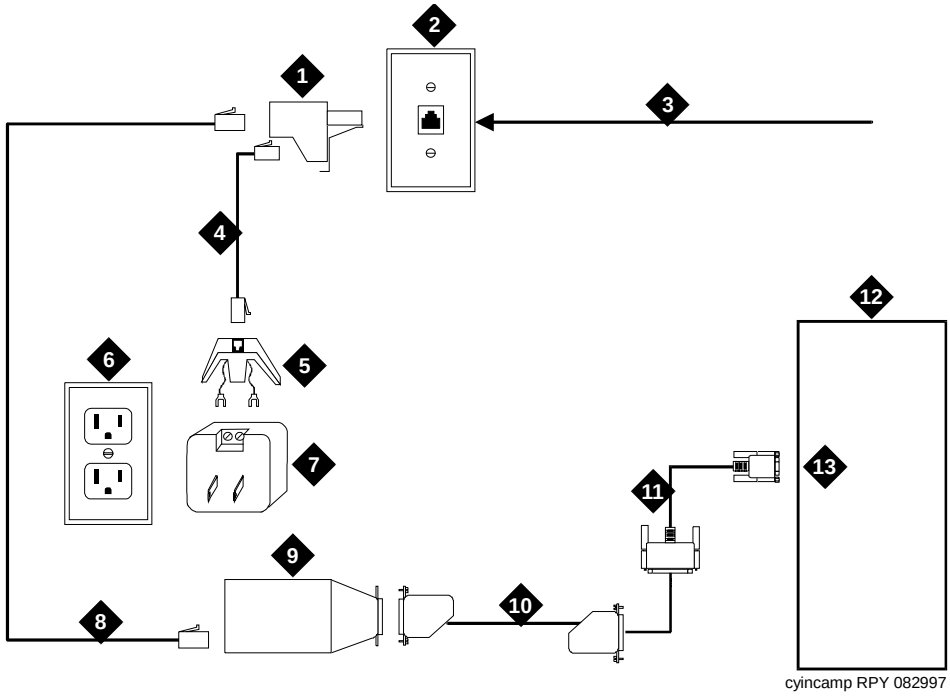

1. 400B2 Adapter
2. Wall Jack
3. Building Wiring from the MERLIN LEGEND/MAGIX Site
4. D6AP-87 Modular Cord
5. 248B Adapter
6. AC Power Outlet
7. 2012D Power Transformer
8. D8W-87 Modular Cord
9. Z3A2-ADU
10. M8AJ-87 Cable
11. DB-9S to DB-25P Adapter
12. Intuity AUDIX LX System
13. COM1 Port (tty00)

Figure 4-4. Connecting Admin Ports More Than 15 Meters (50 Feet)/Different Power Outlet

14. Connect to the Intuity AUDIX LX system.
    a. Connect one end of a M8AJ-87 cable to the 25-pin end of the DB-9S to DB-25P adapter.
    b. Connect the 9-pin end of that adapter to port COM1 (tty00).
15. Connect the other end of the M8AJ-87 cable to the Z3A2 ADU.
16. Connect one end of a D8W-87 modular cord to the modular jack marked **WALL** on the Z3A2 ADU.
17. Connect the other end of the D8W-87 modular cord to a 400B2 adapter.

18. Plug the 400B2 adapter into the wall jack from the Communications System site.
19. Connect one end of a D6AP-87 cord to the 400B2 adapter.
20. Mount a 248B adapter on a 2012D power transformer.
21. Connect the other end of the D6AP-87 cord to the 248B adapter.
22. Plug the 2012D power transformer into an AC outlet.

Connecting SMDR Ports More Than 15 Meters (50 Feet) Different Power Outlets

This method is used only when the MERLIN LEGEND/MAGIX system and the Intuity AUDIX LX system are more than 15 meters (50 feet) apart or do not share the same power outlet.

NOTE:
The MERLIN LEGEND/MAGIX system does not support out-of-building operation of the Intuity AUDIX LX system.

NOTE:
This adapter has slanted sides as shown in Figure 4-6.

The following parts are required for either type of connection:

- 355AF adapter
- Z200A EMI filter modular cord
- Two D8W-87 modular cords
- M7-U87 crossover cable
- Two Z3A2 ADUs
- Two M8AJ-87 cable
- D8AM-87 modular crossover cable
- Two 400B2 adapters
- Two D6AP-87 modular cords
- Two 248B adapters
- Two 2012D power transformers

NOTE:
The combination of a Z3A2 ADU and an M8AJ-87 cable is equivalent to a Z3A4 ADU. You must order both pieces (one of each for the Admin port, and another of each for the SMDR port).

NOTE:
Inside wire must be 4-pair, suitable for data; type-3 UTP data cable or better.

Connect to the first available port on the multi-port serial card.

NOTE:
An SMDR connection to a R5.0 and later load can be connected to serial port 1 (COM 1). A multi-port serial card is not needed on an R5.0 and later load.

See Figure 4-5. Connect the MERLIN LEGEND/MAGIX Communications System SMDR port and the Intuity AUDIX LX system by following these steps:

1. Connect the short end of the Z200A EMI filter modular cord to the SMDR (upper) modular jack on the MERLIN LEGEND/MAGIX Communications System.
2. Connect the long end of the D8W-87 modular cord to a 355AF adapter.
3. Connect the 355AF adapter to one end of an M7-U87 crossover cable.
4. Connect the other end of the M7-U87 crossover cable to the matching end of a M8AJ-87 cable.
5. Connect the other end of the M8AJ-87 cable to the matching connector on a Z3A2 ADU.
6. Connect one end of a D8W-87 modular cord to the modular jack marked **WALL** on the Z3A2 ADU.
7. Connect the other end of the D8W-87 modular cord to the modular jack end of a D8AM-87 crossover cord.
8. Connect the modular plug end of the D8AM-87 crossover cord to the matching modular jack on a 400B2 adapter.
9. Plug the 400B2 adapter into the wall jack leading to the Intuity AUDIX LX system site.
10. Connect one end of a D6AP-87 modular cord to the 400B2 adapter.
11. Mount a 248B adapter to a 2012D power transformer.
12. Connect the other end of the D6AP-87 modular cord to the 248B adapter.
13. Plug the 2012D power transformer into an AC power outlet.

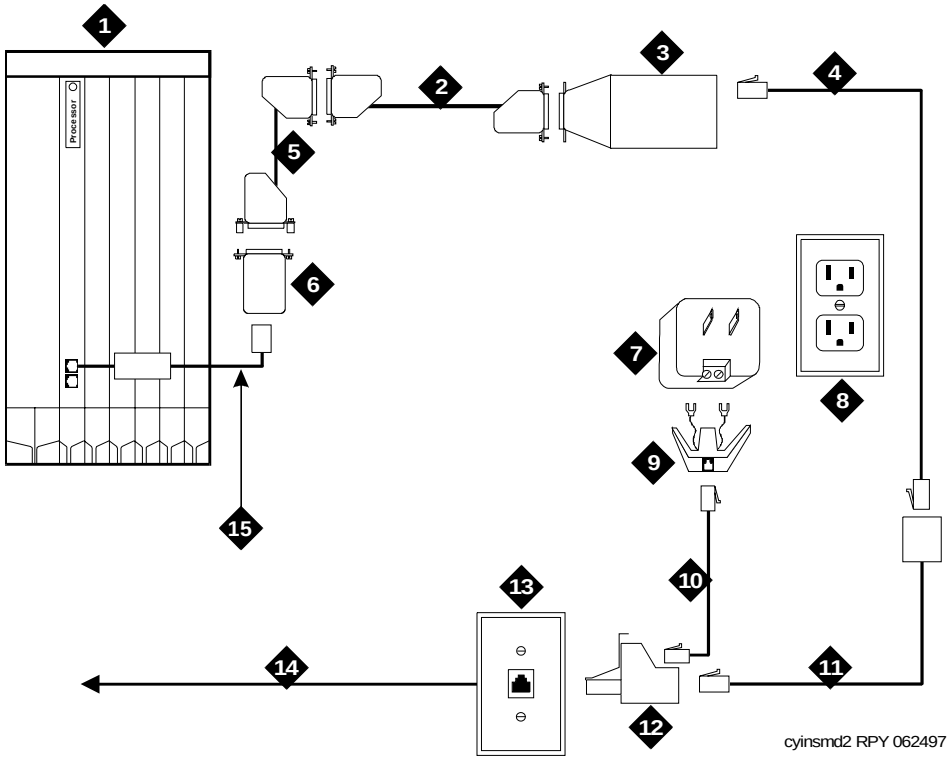

1. MERLIN LEGEND/MAGIX Communications System
2. M8AJ-87
3. Z3A2-ADU
4. D8W-87
5. M7-U87 Crossover Cable
6. 355AF Adapter
7. 2012D Power Transformer
8. AC Power Outlet
9. 248B Adapter
10. D6AP-87
11. D8AM-87 Crossover
12. 400B2 Adapter
13. Wall Jack
14. Building Wiring to Intuity AUDIX LX System Site
15. Z200A EMI Filter Cord (Maximum Distance15 Meters [50 Feet])
    Connect to upper SMDR jack with the short end toward the MERLIN LEGEND/MAGIXS Communications

Figure 4-5. Connecting SMDR Ports More Than 50 Feet/Different Power Outlet

Go to the Intuity AUDIX LX system site to continue the connection. See Figure 4-6.

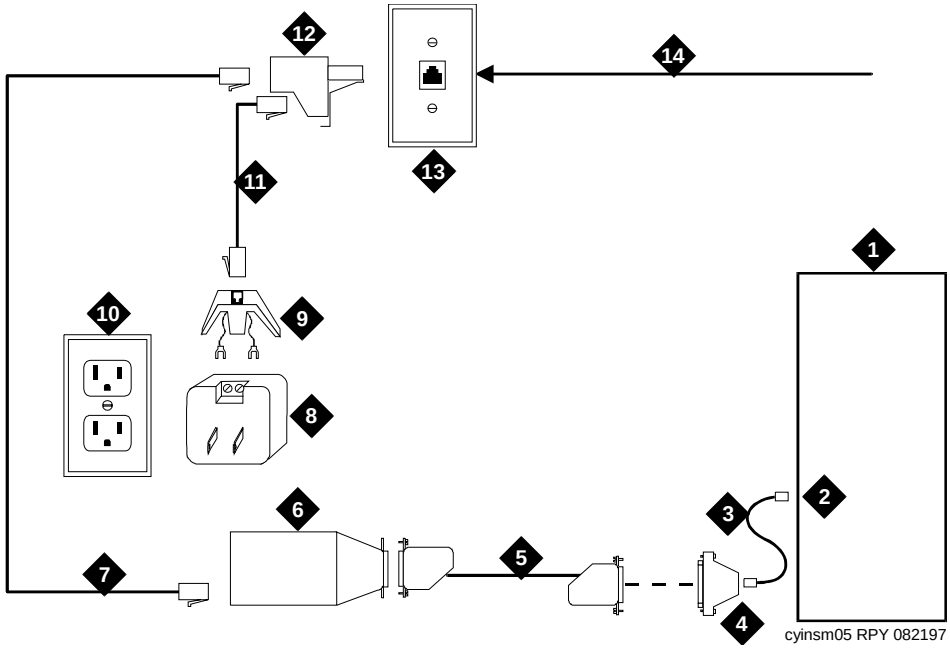

1. Intuity AUDIX LX System
2. Serial Card (First Available Port)
3. 6P6C Modular Cord
4. DTE 4/6 to DB-25P Adapter
5. M8AJ-87
6. Z3A2-ADU
7. D8W-87
8. 2012D Power Transformer
9. 248B Adapter
10. AC Power Outlet
11. D6AP-87
12. 400B2 Adapter
13. Wall Jack
14. Building Wiring from the MERLIN LEGEND/MAGIX Communications System Site

Figure 4-6. Connecting SMDR Ports More Than 50 Feet/Different Power Outlet

15. Connect to the Intuity AUDIX LX system to the first available port on the multi-port serial card:
    a. Connect one end of the 6-position, 6-conductor modular cord to the port.
    b. Connect the other end of the modular cord to the DTE 4/6-to-DB-25P adapter.
    c. Connect one end of an M8AJ-87 cable to the other end of the DTE 4/6-to-DB-25P adapter.

16. Connect the other end of the M8AJ-87 cable to the Z3A2 ADU.
17. Connect one end of a D8W-87 modular cord to the modular jack marked **WALL** on a Z3A2 ADU.
18. Connect the other end of the D8W-87 modular cord to a 400B2 adapter.
19. Plug the 400B2 adapter into the wall jack from the Communications System site.
20. Connect one end of a D6AP-87 cord to the 400B2 adapter.
21. Mount a 248B adapter on a 2012D power transformer.
22. Connect the other end of the D6AP-87 cord to the 248B adapter.
23. Plug the 2012D power transformer into an AC outlet.

Networking

The MERLIN LEGEND/MAGIX system supports the Intuity AUDIX LX low-speed digital networking, TCP/IP Digital Networking and AMIS analog networking as an *optional* application. High-speed digital networking is not supported since the MERLIN LEGEND/MAGIX system does not support the DCP protocol.

There methods for configuring networking with the MERLIN LEGEND/MAGIX system:

- If the MERLIN LEGEND/MAGIX system has DID lines, the Intuity AUDIX LX low-speed digital networking is connected through the MERLIN LEGEND/MAGIX switch. For incoming calls, outgoing calls can use Legend System Lines.
- If the MERLIN LEGEND/MAGIX system does not have DID lines, the connections use loop start (LS) lines from the central office (CO) and bypass the switch.
- TCP/IP digital networking via an Ethernet LAN card.

AMIS Analog Networking requires no special hardware for connectivity since it uses the voice channels already assigned to voice services. However, traffic configuration rules may require the addition of voice channels to handle the load of AMIS networking.

To support AMIS Analog Networking, the MERLIN LEGEND/MAGIX system must be configured to send incoming calls on external lines directly to Intuity AUDIX LX®. Touch-tone codes on the incoming calls identify the calls as AMIS networking and cause proper call handling. Many MERLIN LEGEND/MAGIX customers already do this in order to support an automated attendant.

Connecting Low-Speed Digital Networking

The following parts are required:

- ACCX circuit card (includes cable and breakout box)
- Modem (Paradyne® COMSPHERE® 3810, 3820, or 3910 includes modular cord and power supply)
- DB-25 M-M cable

See Figure 4-7. Connect the Intuity AUDIX LX low-speed networking by following these steps:

1. Connect one end of the ACCX cable to the connector on the ACCX card.
2. Connect the other end of the ACCX cable to the matching connector on the break-out box.
3. Connect one end of the DB-25 M-M cable to the connector marked RS-232-CH1 (2, 3, or 4) on the break-out box.
4. Connect the other end of the DB-25 M-M cable to the matching connector on the modem.
5. Connect one end of the modular cord to the jack marked **DIAL** on the modem.
6. If the system does *not* have DID lines, connect the other end of the modular cord to an RJ11C telephone jack wired to a (LS) line from the CO.

   If the system has DID lines, connect the other end of the modular cord to a MERLIN LEGEND/MAGIX Tip/Ring port that has an assigned DID number.

   NOTE:
   If building wire is used, it must be type 3 UTP or better. The distance limitation is the same as for a station.

7. Connect the power supply connector to the modem.
8. Plug in the power supply.
9. Turn on power for the modem.

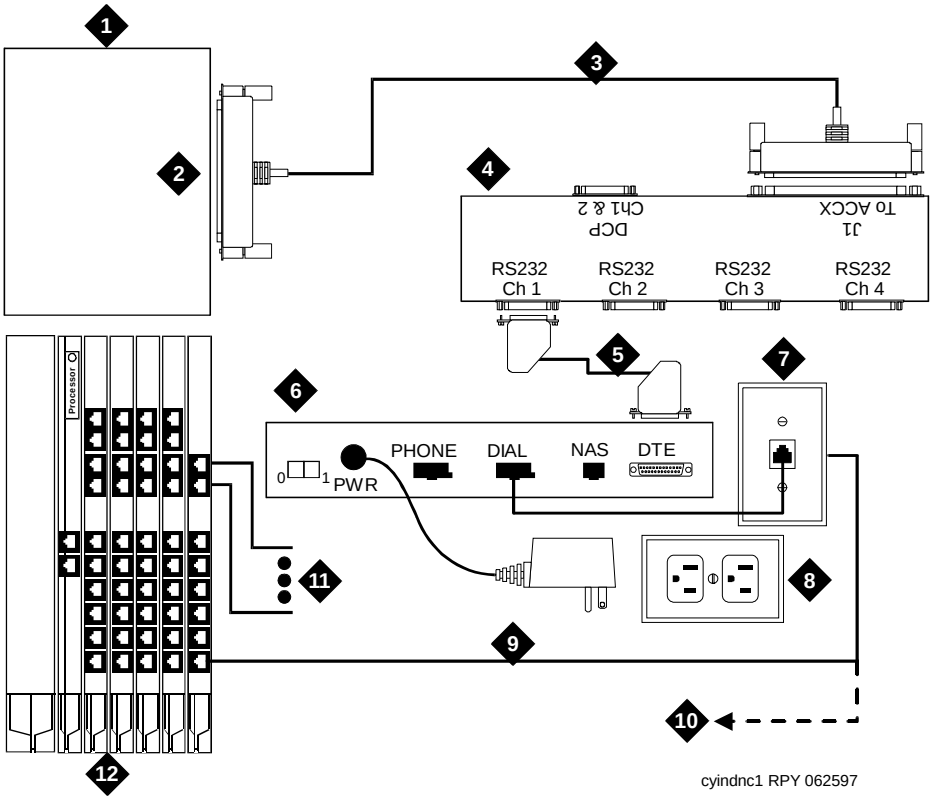

1. Intuity AUDIX LX System
2. ACCX Circuit Card
3. ACCX Cable
4. Networking Breakout Box
5. DB-25 M-M Cable
6. Paradyne COMSPHERE Modem
7. Wall Jack
8. AC Power Outlet
9. With DID, To Tip/Ring Port
10. Without DID, To Public Network L/S Line
11. DID Lines To Public Network
12. MERLIN LEGEND/MAGIX Communications System

Figure 4-7. Digital Networking Connections

Remote Maintenance

Remote maintenance is required on all releases Intuity AUDIX LX. Remote maintenance requires a direct line connection. Remote maintenance can be done by either of the following options:

- Remote maintenance modem
- Remote maintenance board (RMB)

RMB Install

See your installation book to know more about the RMB Install.

Remote Maintenance Modem Installation

The remote maintenance modem must be connected to serial port 2 (COM2). If serial port 2 (COM2) is already in use, do the following:

1. Move the device (if any) connected to serial port 2 (COM2) to the first available port on the multi-port serial card. See device-specific instructions elsewhere in this chapter.
2. Readminister the application formerly using serial port 2 (COM2) to use the serial port now connected on the multi-port serial card.
3. Connect the remote maintenance modem to serial port 2 (COM2).

The following parts are required:

- DB-9S-to-DB-25P adapter
- RS-232 M-F cable
- Modem (Paradyne COMSPHERE 3820 or ATT Paradyne 3910, includes modular cord and power supply)

See Figure 4-8. Connect the Intuity AUDIX LX remote maintenance modem by following these steps:

1. Connect the small end of the DB-9S-to-DB-25P adapter to serial port 2 on the MAP/5 series computer or COM2 on the MAP/40 or MAP/100 series computer.
2. Connect the matching end of the DB-25 M-F cable to the large end of the DB-9S to DB-25P adapter.
3. Connect the other end of the DB-25 M-F cable to the matching connector on the modem.
4. Connect one end of the modular cord supplied with the modem to the jack marked **DIAL** on the modem.
5. If the MERLIN LEGEND/MAGIX system does *not* have DID lines, connect the other end of the modular cord to a RJ11C telephone jack wired to a (LS) line from the CO.

   If the MERLIN LEGEND/MAGIX system has DID lines, connect the other end of the modular cord to a MERLIN LEGEND/MAGIX Tip/Ring port on an 012 or 016 module (Legend has other Tip/Ring connections) that has an assigned DID number.

   NOTE:
   If building wire is used, it must be type-3 UTP or better. The distance limitation is the same as for a station.

6. Connect the power supply connector to the modem.
7. Plug in the power supply.
8. Turn on power for the modem.

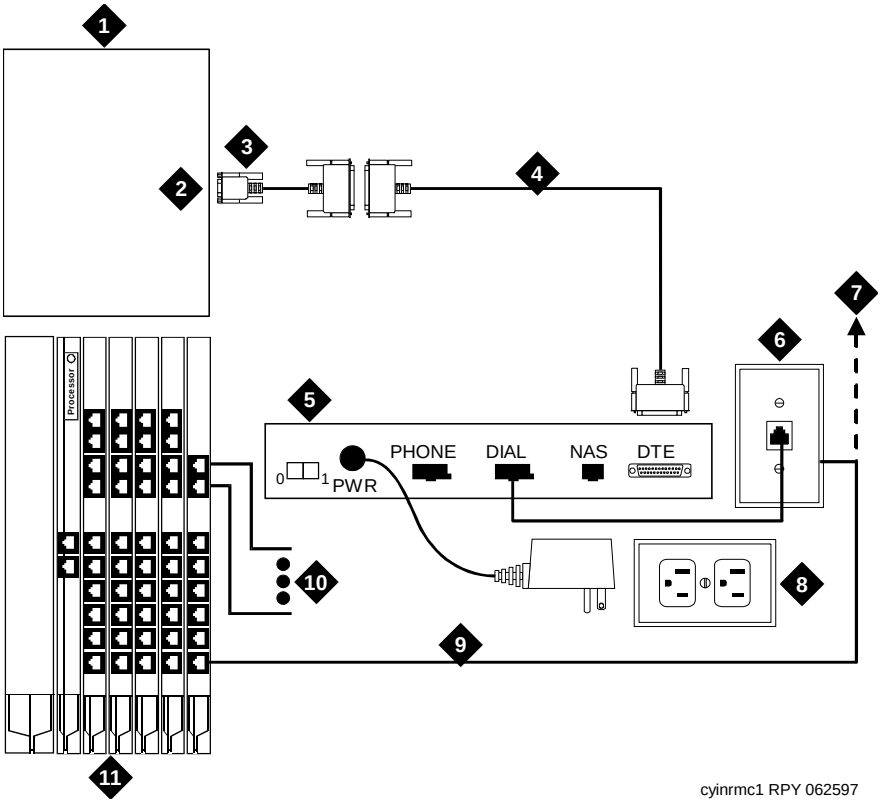

1. Intuity AUDIX LX System
2. Serial Port 2 (MAP/5 Series) or COM2 (MAP/40 or MAP/100 Series)
3. DB-9S to DB-25P Adapter
4. DB-25 M-F Cable
5. Paradyne COMSPHERE Modem
6. Wall Jack
7. Without DID, To Public Network L/S Line
8. AC Power Outlet
9. With DID, To Tip/Ring Port
10. DID Lines to Public Network
11. MERLIN LEGEND/MAGIX Communications System

Figure 4-8. Remote Maintenance Connections

Remote Access

Local access to the Intuity AUDIX LX system is provided by the keyboard and monitor of the Intuity AUDIX LX system. The Multi-User Feature Package and Remote Access is an application for the MERLIN LEGEND/MAGIX INTUITY system. It is sometimes convenient to have terminals located on the system administrator's desk or at other locations. While it is possible to use the "pass through" capability of the MERLIN LEGEND/MAGIX system for remote access, this often requires operator assistance. Remote administration allows system administrators to perform duties at their desks, saving time and trips when the Intuity AUDIX LX system is not close by.

NOTE:
Only one subscriber can be logged on to the Intuity AUDIX LX system at a time unless the Multi-User Feature Package has been installed. With the Multi-User Feature, the Intuity AUDIX LX system can accommodate up to four simultaneous logins.

NOTE:
The "pass through" capability is not an option on AUDIX R5.0 and later software loads.

Because the Multi-User Feature Package allows multiple login sessions, it is possible to delegate Intuity AUDIX LX system administration duties to several people. This not only divides up the work needed to maintain a Intuity AUDIX LX system, but also gives subscribers and callers several points of contact should a problem occur.

Dedicated-Line Access

Dedicated-line access can be used when a specific terminal will always be connected to the line, that is, when dial-up access is not required. Dedicated line access is always to the first available port on the multi-port serial card. Dedicated-line access can be accomplished in the following ways:

- If the terminal is within 15 meters (50 feet) of the Intuity AUDIX LX system, the terminal can be connected directly to the multi-port serial card using either of the methods shown in Figure 4-9.
- If the terminal is more than 15 meters (50 feet) from the Intuity AUDIX LX system, it can be connected to the multi-port serial card using ADUs as line extenders.

In all other cases, remote access connections (using dial-up modems) should be used.

Connecting Dedicated Lines within 15 Meters (50 Feet)

These methods are used only when the Intuity AUDIX LX system and the terminal are within 15 meters (50 feet).

The following parts are required:

- Multi-port serial card (if not already installed)
- 6-position, 6-conductor straight-through modular cord (supplied with the multi-port serial card)
- DCE 4/6-to-DB-25P adapter

  NOTE:
  This adapter has slanted sides as shown in Figure 4-9.

- DB-25 M-F cable

See Figure 4-9. Connect the local terminal by following these steps:

1. Connect one end of the 6-position, 6-conductor modular cord to the first available port on the multi-port serial card.
2. Connect the other end of the modular cord to the DTE-4/6-to-DB-25P adapter.
3. Connect the matching end of the DB-25 M-F cable to the DTE-4/6-to-DB-25P adapter.
4. Connect the other end of the DB-25 M-F cable to the AT&T 715 terminal.

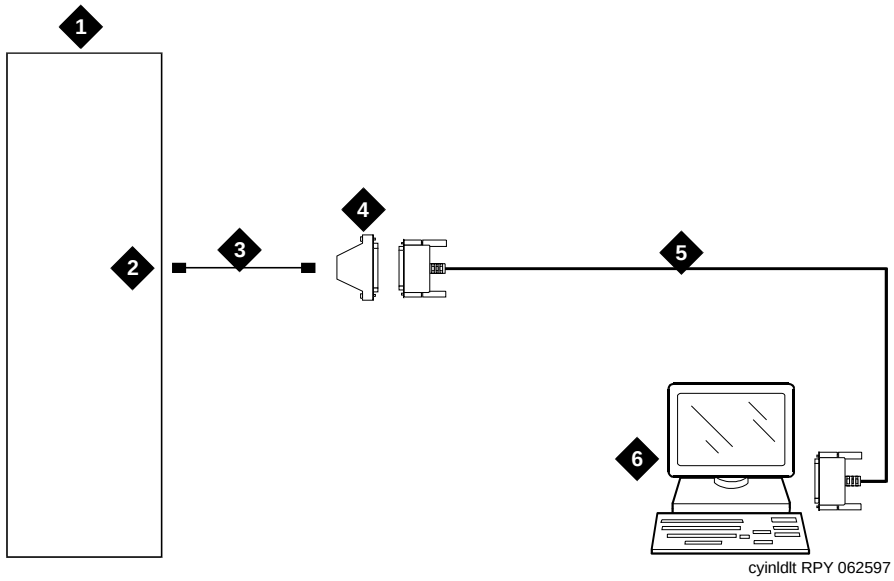

1. Intuity AUDIX LX System
2. Serial Card (First Available Port)
3. 6P6C Modular Cord
4. DTE 4/6 to DB-25P Adapter
5. DB-25 M-F Cable
6. Avaya 715 Terminal

Figure 4-9. Local Dedicated Line Terminal Connections

Connecting Dedicated Lines beyond 15 Meters (50 Feet)

This method is used only when the Intuity AUDIX LX system and the terminal are more than 15 meters (50 feet) apart.

If the terminal is in a building outside the main building (where the Intuity AUDIX LX system is located), an ADU and an additional protector must be installed in each building. The ADUs and protectors provide both the Intuity AUDIX LX system and the terminal protection against exposure to lightning, inadvertent contact with power lines, and power currents induced by nearby power lines. See the installation notes packed with the ADU for more information.

The following parts are required:

- Multi-port serial card (if needed and not already installed)
- 6-position, 6-conductor straight-through modular cord (supplied with the multi-port serial card)

- DTE 4/6-to-DB-25P adapter (for connection to multi-port serial card only, ordered with PEC 70853)

  NOTE:
  This adapter has slanted sides as shown in Figure 4-10.

- Two D8W-87 modular cords
- M7-U87 crossover cable
- Two Z3A2 ADUs
- Two M8AJ-87 Cables
- D8AM-87 Modular crossover cable
- Two 400B2 adapters
- Two D6AP-87 modular cords
- Two 248B adapters
- Two 2012D Power Transformers

NOTE:
The combination of a Z3A2 ADU and an M8AJ-87 cable is equivalent to a Z3A4 ADU. You must order both pieces (one of each for the Admin port, another of each for the SMDR port).

NOTE:
Inside wire must be 4-pair, suitable for data; type-3 UTP data cable or better.

NOTE:
Local powering of the Z3A2 ADU is optional.

Connect to the first available port on the multi-port serial card.

See Figure 4-10. Connect the terminal and the Intuity AUDIX LX system by following these steps:

1. Connect one end of the M7U-87 crossover cable to the terminal.
2. Connect the other end of the M7U-87 cable to the matching end of a M8AJ-87 cable.
3. Connect the other end of the M8AJ-87 cable to the matching connector on a Z3A2 ADU.
4. Connect one end of a D8W-87 modular cord to the modular jack marked **WALL** on the Z3A2 ADU.
5. Connect the other end of the D8W-87 modular cord to the modular jack end of a D8AM-87 crossover cord.
6. Connect the modular plug end of the D8AM-87 crossover cord to the matching modular jack on a 400B2 adapter.

7. Plug the 400B2 adapter into the wall jack leading to the Intuity AUDIX LX system site.
8. Connect one end of a D6AP-87 modular cord to the 400B2 adapter.
9. Mount a 248B adapter to a 2012D power transformer.
10. Connect the other end of the D6AP-87 modular cord to the 248B adapter.
11. Plug the 2012D power transformer into an AC power outlet.

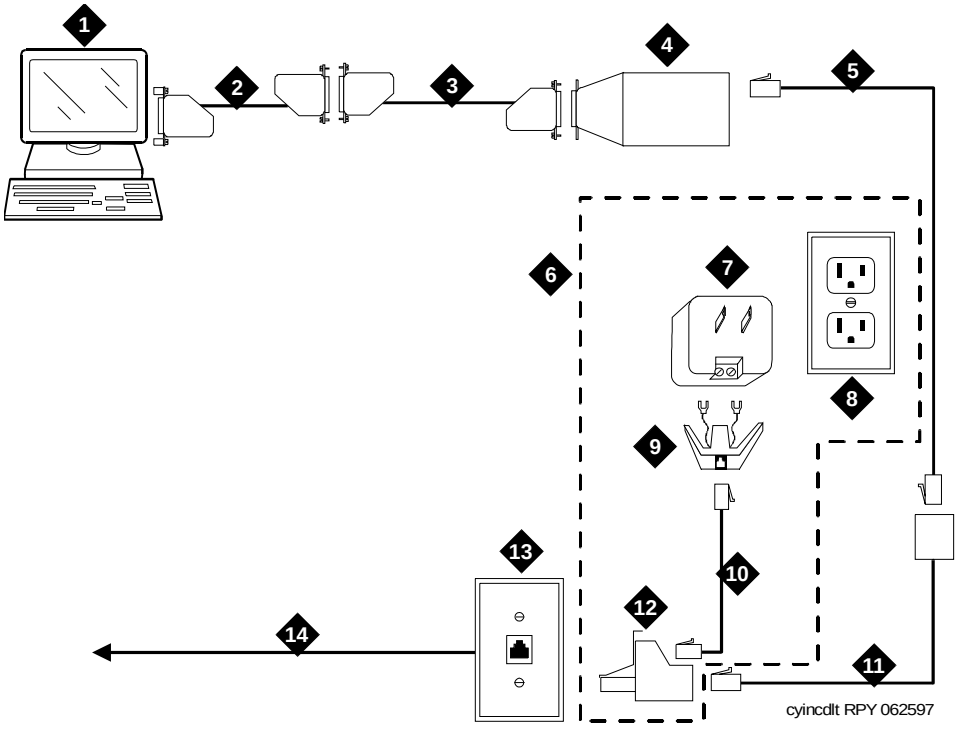

1. Avaya 715 Terminal
2. M7U-87 Crossover
3. M8AJ-87 Cable
4. Z3A2-ADU
5. D8W-87 Modular Cord
6. Optional Power
7. 2012D Power Transformer
8. AC Power Outlet
9. 248B Adapter
10. D6AP-87 Modular Cord
11. D8AM-87 Crossover Cable
12. 400B2 Adapter
13. Wall Jack
14. Building Wiring to Intuity AUDIX LX System Site

Figure 4-10. Connecting Dedicated Line Terminal More Than 15 Meters (50 Feet): Terminal End

Go to the Intuity AUDIX LX system site to continue the connection. See Figure 4-11.

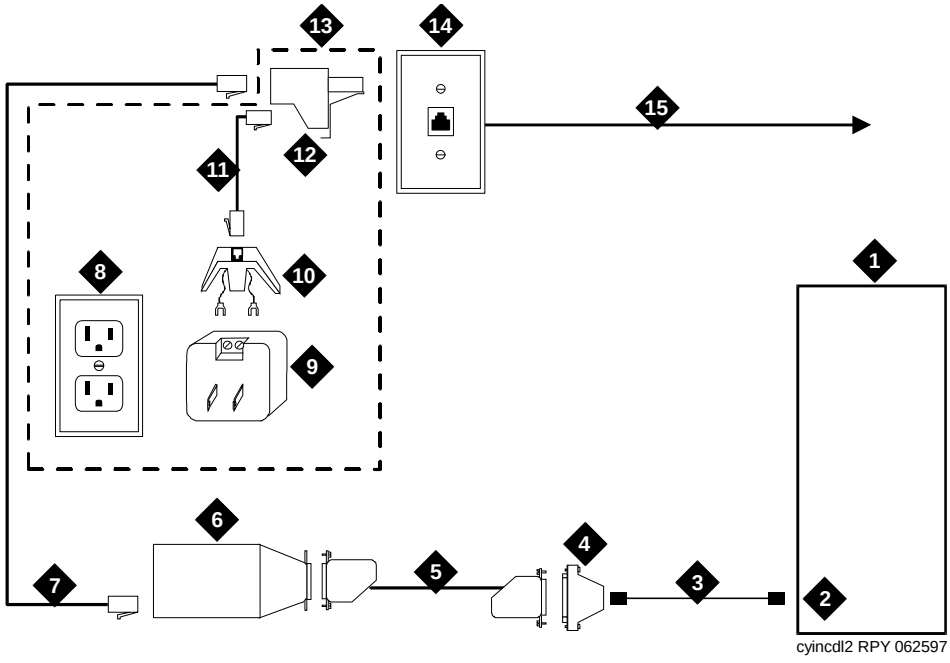

1. Intuity AUDIX LX System
2. Serial Card (First Available Port)
3. 6P6C Modular Cord
4. DTE 4/6 to DB-25P Adapter
5. M8AJ-87 Cable
6. Z3A2-ADU
7. D8W-87 Modular Cord
8. AC Power Outlet
9. 2012D Power Transformer
10. 248B Adapter
11. D6AP-87
12. 400B2 Adapter
13. Optional Power
14. Wall Jack
15. Building Wiring to Terminal Site

Figure 4-11. Connecting Dedicated Line Terminal More Than 15 Meters (50 Feet): Intuity AUDIX LX End

16. Connect one end of the 6-position, 6-conductor modular cord to the first available port on the multi-port serial card.
17. Connect the other end of the modular cord to the DTE-4/6-to-DB-25P adapter.
18. Connect one end of an M8AJ-87 cable to the DTE-4/6-to-DB-25P adapter.

19. Connect the other end of the M8AJ-87 cable to the Z3A2 ADU.
20. Connect one end of a D8W-87 modular cord to the modular jack marked **WALL** on a Z3A2 ADU.
21. Connect the other end of the D8W-87 modular cord to a 400B2 adapter.
22. Plug the 400B2 adapter into the wall jack from the Communications System site.
23. Connect one end of a D6AP-87 cord to the 400B2 adapter.
24. Mount a 248B adapter on a 2012D power transformer.
25. Connect the other end of the D6AP-87 cord to the 248B adapter.
26. Plug the 2012D power transformer into an AC outlet.

Remote Access (Dial-Up) Connections

Connect to the first available port on the multi-port serial card.

The following parts are required:

- Multi-Port serial card (if needed and not already installed)
- 6-position, 6-conductor straight-through modular cord (supplied with the multi-port serial card)
- DTE-4/6-to-DB-25P adapter (ordered with PEC 70853)

  NOTE:
  This adapter has slanted sides as shown in Figure 4-12.

- Modem (Paradyne COMSPHERE 3820, includes modular cord and power supply)

See Figure 4-12. Connect the Intuity AUDIX LX remote maintenance modem by following these steps:

1. To connect to the Intuity AUDIX LX system to the first available port on the multi-port serial card:
   a. Connect one end of the 6-position, 6-conductor modular cord to the port.
   b. Connect the other end of the modular cord to the DTE-4/6-to-DB-25P adapter.
2. Connect the other end of the DB-25 M-F cable or the DTE-4/6-to-DB-25P adapter to the matching connector on the modem.
3. Connect one end of the modular cord supplied with the modem to the jack marked **DIAL** on the modem.

4. If the MERLIN LEGEND/MAGIX system does ***not*** have DID lines, connect the other end of the modular cord to a RJ11C telephone jack wired to a (LS) line from the CO.

   If the MERLIN LEGEND/MAGIX system has DID lines, connect the other end of the modular cord to a MERLIN LEGEND/MAGIX tip/ring port 012 or 016 that has an assigned DID number.

   NOTE:
   If building wire is used, it must be type-3 UTP or better. The distance limitation is the same as for a station.

5. Connect the power supply connector to the modem.
6. Plug in the power supply.
7. Turn on the power for the modem.

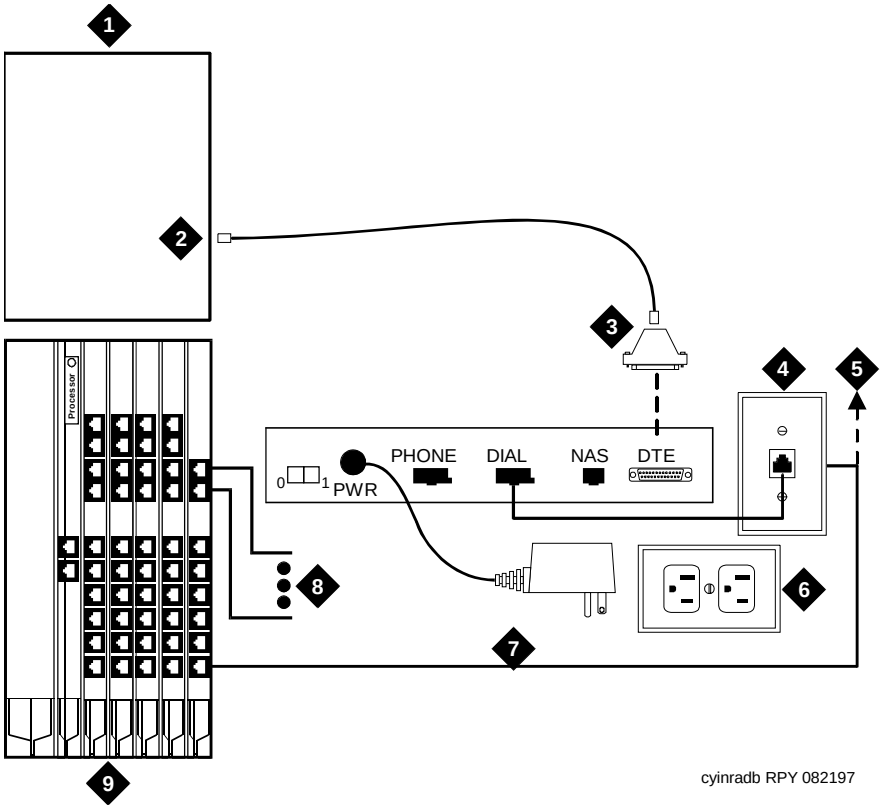

1. Intuity AUDIX LX System
2. Serial Card (First Available Port)
3. DTE 4/6 to DB-25P Adapter
4. Wall Jack
5. Without DID, To Public Network L/S Line
6. AC Power Outlet
7. With DID, To Tip/Ring Port
8. DID Lines To Public Network
9. MERLIN LEGEND/MAGIX Communications System

Figure 4-12. Remote Access Dial-Up Connections

MERLIN LEGEND and MERLIN MAGIX Switch Administration

5

Overview

This chapter describes how to administer the MERLIN LEGEND® and MERLIN MAGIX™ systems for integration with the Intuity AUDIX system and includes how to set:

- Disconnect signaling reliability
- Group coverage member assignments
- Group calling trunk or pool assignments
- Hunt type
- Group coverage receiver
- Group type
- Allowed lists
- Assign allowed lists to Intuity AUDIX LX ports
- Disallowed lists
- Assign disallowed lists to Intuity AUDIX LX ports
- Assign extensions for night service
- Assign INTUITY AUDIX LX ® calling group for night service

Purpose

The purpose of this chapter is to provide instructions for administering the MERLIN LEGEND/MAGIX Communications system either with the system programming utility or from the console.

Disconnect Signaling Reliability

Use this procedure to classify the disconnect signal sent by the central office on loop-start trunks as reliable. The selected setting applies to all trunks in the system; trunks cannot be programmed individually. The disconnect signaling reliability does not apply to loop-start trunks emulated on a T1 facility.

To set the disconnect signaling reliability:

1. From the System Programming menu, select Lines and Trunks.
   - On the console: Select `LinesTrunks`.
   - On the PC: Press F4.

   The system displays the Lines and Trunks menu.
2. Select Touch-Tone/Loop Start Disconnect.
   - On the console: Select `TT/LS Disc.`
   - On the PC: Press F3.

   The system displays the TouchTone/LS Disconnect menu.
3. Select Loop Start Disconnect.
   - On the console: Select `LS Disconnect`.
   - On the PC: Press F2.

   The system displays the LS Reliable Disconnect menu.
4. Specify the disconnect signal as reliable.
   - On the console: Select `Yes`.
   - On the PC: Press F1.
5. Save your entry.
   - On the console: Select `Enter`.
   - On the PC: Press F10.
6. Return to the System Programming menu.
   - On the console: Select `Exit` two times.
   - On the PC: Press F5 two times.

Group Coverage Member Assignments

Use this procedure to assign a telephone to a coverage group. Coverage is an arrangement in which calls from a group of senders are redirected to one or more receivers. A coverage group is a group of senders.

NOTE:
This procedure assigns senders.

A maximum of 30 coverage groups is allowed, each with an unlimited number of members. Up to eight receivers can be assigned per coverage group.

A telephone can be a sender in only one group; it can be a receiver for more than one coverage group.

To assign telephones to a coverage group:

1. From the System Programming menu, select Extensions.
   - On the console: Select `Extensions`.
   - On the PC: Press F6.

   The system displays the Extensions menu.
2. Access the second screen of the Extensions menu.
   - On the console: Press More.
   - On the PC: Press PgUp.
3. Select Group Cover.
   - On the console: Select `Group Cover`.
   - On the PC: Press F3.

   The system displays the Group Coverage screen.

   NOTE:
   To view numbers already listed in a coverage group:
   - On the console: Press Inspect.
   - On the PC: Press Patron.
4. Enter the coverage group number (this is typically 30.)
5. Save your entry.
   - On the console: Select `Enter`.
   - On the PC: Press F10.

   The system displays the Group Cover Senders screen.
6. Enter the extension number of the telephone you want to put in the coverage group.

7. Save your entry.
   - On the console: Select `Enter`.
   - On the PC: Press F10.
8. Repeat Steps 6 and 7 for all extensions.
9. Return to the System Programming menu.
   - On the console: Select `Exit` two times.
   - On the PC: Press F5 two times.

Group Calling Member Assignments

Use this procedure to assign an 012 or 016 (for MERLIN LEGEND/MAGIX release version 4.0 or later) module port to a calling group. A calling group is used to direct calls to a group of people who all handle the same type of call. A single extension number is assigned to the group and is used by both inside and outside callers to reach the group.

A maximum of 32 calling groups with a maximum of 20 telephones per group is allowed.

To assign a port to a calling group:

1. Select Extensions.
   - On the console: Select `Extensions`.
   - On the PC: Press F6.

   The system displays the Extensions menu.
2. Access the second screen of the Extensions menu.
   - On the console: Press `More`.
   - On the PC: Press PgUp.
3. Select Group Calling.
   - On the console: Select `Grp Calling`.
   - On the PC: Press F4.

   The system displays the Group Calling menu.
4. Select Members.
   - On the console: Select `Members`.
   - On the PC: Press F9.
5. Enter the extension number of the calling group. (Generally, use 770, unless it has been renumbered.)

6. Save your entry.
   - On the console: Select `Enter`.
   - On the PC: Press F10.
7. Enter the extension number of the port you want to assign.
8. Save your entry.
   - On the console: Select `Enter`.
   - On the PC: Press F10.
9. Repeat Steps 7 and 8 for each extension.
10. Return to the System Programming menu.
    - On the console: Select `Exit` three times.
    - On the PC: Press F5 three times.

Group Calling Trunk or Pool Assignments

Use this procedure to assign or remove trunks or pools that ring directly into a calling group.

Incoming calls on each trunk or pool can be directed to only one calling group.

To reassign a trunk or pool to a new calling group, you must remove it from its old group before making the new assignment.

To assign trunks or pools to ring directly into a calling group:

1. From the System Programming menu, select Extensions.
   - On the console: Select `Extensions`.
   - On the PC: Press F6.

   The system displays the Extensions menu.
2. Access the second screen of the Extensions menu.
   - On the console: Press More.
   - On the PC: Press PgUp.
3. Select Group Calling.
   - On the console: Select `Grp Calling`.
   - On the PC: Press F4.

   The system displays the Group Calling menu.

4. Select Line/Pool.
   - On the console: Select `Line/Pool`.
   - On the PC: Press F10.

   The system displays the Group Calling screen.
5. Enter the extension of the calling group (this is typically, 770).
6. Save your entry.
   - On the console: Select `Enter`.
   - On the PC: Press F10.
7. Enter the Line/Trunk number or pool number you want to assign.

   NOTE:
   If 801, 802, 803, etc. are in pool 70, then you must specify 70.

8. Save your entry.
   - On the console: Select `Enter`.
   - On the PC: Press F10.
9. Repeat Steps 7 and 8 as required for additional lines/pools.
10. Return to the System Programming menu.
    - On the console: Select `Exit` three times.
    - On the PC: Press F5 three times.

Hunt Type

Use this procedure to assign the hunt-type pattern to calling groups as linear. When the linear hunting pattern is selected, the system searches for an available group member in the order in which telephones were assigned to the calling group.

To set the hunt-type pattern to linear:

1. From the System Programming menu, select the Extensions menu.
   - On the console: Select `Extensions`.
   - On the PC: Press F6.

   The system displays the Extensions menu.
2. Access the second screen of the Extensions menu.
   - On the console: Press More.
   - On the PC: Press PgUp.

3. Select Group Calling.
   - On the console: Select `Grp Calling`.
   - On the PC: Press F4.

   The system displays the Group Calling menu.
4. Select Hunt Type.
   - On the console: Select `Hunt Type`.
   - On the PC: Press F1.

   The system displays the Group Calling screen.
5. Enter the extension number of the calling group.
6. Save your entry.
   - On the console: Select `Enter`.
   - On the PC: Press F10.
7. Specify the hunt pattern as linear.
   - On the console: Select `Linear`.
   - On the PC: Press F2.
8. To save your selection and program the hunt type for another calling group:
   - If the next group extension number is sequential:
     - On the console: Select `Next` and repeat Step 7.
     - On the PC: Press F9 and repeat Step 7.

       The system saves your previous entry and shows the next group extension number on line 1 of the screen.
   - If the next group extension number is not sequential:
     - On the console: Select `Enter` and repeat Steps 5 through 7.
     - On the PC: Press F10 and repeat Steps 5 through 7.

   To save your selection when all entries are complete:
   - On the console: Select `Enter`.
   - On the PC: Press F10.
9. Return to the System Programming menu.
   - On the console: Select `Exit` three times.
   - On the PC: Press F5 three times.

Group Coverage Receiver

Use this procedure to assign a calling group as receiver for a coverage group.

Calling group member assignments must be made before you assign the group as a receiver for a coverage group.

To assign a calling group as receiver for a coverage group:

1. From the System Programming menu, select Extensions.
   - On the console: Select `Extensions`.
   - On the PC: Press F6.

   The system displays the Extensions menu.
2. Access the second screen of the Extensions menu.
   - On the console: Press More.
   - On the PC: Press PgUp.
3. Select Group Calling.
   - On the console: Select `Grp Calling`.
   - On the PC: Press F4.

   The system displays the Group Calling menu.
4. Select Group Coverage.
   - On the console: Select `GrpCoverage`.
   - On the PC: Press F3.

   The system displays the Group Calling screen.
5. Enter the extension number of the calling group (this is typically, 770.)
6. Save your entry.
   - On the console: Select `Enter`.
   - On the PC: Press F10.
7. Enter the coverage group for which you want to assign the calling group as receiver (this is typically, 30).
8. Save your entry.
   - On the console: Select `Enter`.
   - On the PC: Press F10.
9. Return to the System Programming menu.
   - On the console: Select `Exit` three times.
   - On the PC: Press F5 three times.

Group Type

This setting determines the type of voice messaging interface when the calling group is used to connect voice messaging and/or automated attendant applications.

To set the group type:

1. From the System Programming menu, select Extensions.
   - On the console: Select `Extensions`.
   - On the PC: Press F6.

   The system displays the Extensions menu.
2. Access the second screen of the Extensions menu.
   - On the console: Press More.
   - On the PC: Press PgUp.
3. Select Group Calling.
   - On the console: Select `Grp Calling`.
   - On the PC: Press F4.

   The system displays the Group Calling menu.
4. Access the second screen of the Group Calling menu.
   - On the console: Press More.
   - On the PC: Press PgUp.
5. Select Group Type.
   - On the console: Select `Group Type`.
   - On the PC: Press F1.
6. Enter the extension number of the group.
7. Save your entry.
   - On the console: Select `Enter`.
   - On the PC: Press F10.
8. Select Integrated VMI. (For a dedicated IVR group, select Generic VMI.)
   - On the console: Select `Integ VMI`.
   - On the PC: Press F3.
9. Save your entry.
   - On the console: Select `Enter`.
   - On the PC: Press F10.

10. Return to the System Programming menu.
    - On the console: Select `Exit` three times.
    - On the PC: Press F5 three times.

Allowed Lists

Use this procedure to establish Allowed Lists, consisting of telephone numbers that can be dialed from specified telephones, regardless of calling restrictions assigned to telephones.

A maximum of eight lists, numbered 0 through 7, with a maximum of 10 numbers each, numbered 0 through 9, is allowed. An * (asterisk) can be entered in Release 3.1 or later versions of Intuity AUDIX LX. Each allowed number can be no more than 6 digits (an area code plus an exchange) or 6 digits with a leading 1, where required.

If you program 0 as the first digit of a list entry, any toll restriction assigned to the station is removed for calls that can be placed by a toll operator.

Special characters (such as “pause”) are not permitted in Allowed List entries.

To establish Allowed Lists:

1. From the System Programming menu, select Tables.
    - On the console: Select `Tables`.
    - On the PC: Press F8.

    The system displays the Tables menu.
2. Select Allowed Lists.
    - On the console: Select `AllowList`.
    - On the PC: Press F1.

    The system displays the Allowed List screen.
3. Determine your next step:
    - If list and entry numbers are already entered, go to Step 5.
    - If you need to enter list and entry numbers, enter the list (l = 0-7) and entry (e = 0-9) number. (If you are programming a sequence, enter the lowest number.)
4. Save your entry.
    - On the console: Select `Enter`.
    - On the PC: Press F10.

5. Erase the current area code/exchange.
   - On the console: Press Drop.
   - On the PC: Press ALT P.
6. Enter the allowed area code/exchange (up to 6 digits).
7. To save your entry and enter the next item in the Allowed List:
   - If the next entry number is sequential:
     - On the console: Select `Next` and repeat Steps 5 and 6.
     - On the PC: Press F9 and repeat Steps 5 and 6.

       The system saves your previous entry and shows the next entry number on line 1 of the screen.
   - If the next entry number is not sequential:
     - On the console: Select `Enter` and repeat Steps 2 through 6.
     - On the PC: Press F10 and repeat Steps 2 through 6.

   To save your entry when all entries are complete:
   - On the console: Select `Enter`.
   - On the PC: Press F10.
8. Return to the System Programming menu.
   - On the console: Select `Exit`.
   - On the PC: Press F5.

Assign Allowed Lists to Intuity AUDIX LX Ports

Use this procedure to assign access to established Allowed Lists to the Intuity AUDIX LX ports. A maximum number of eight Allowed Lists can be assigned to a port.

To assign Allowed Lists to VM ports:

1. From the System Programming menu, select Tables.
   - On the console: Select `Tables`.
   - On the PC: Press F8.

   The system displays the Tables menu.
2. Select Assign Allowed Lists To.
   - On the console: Select `AllowTo`.
   - On the PC: Press F2.

   The system displays the Allow To List screen.

3. Enter the Allowed List you want to assign. (If you are programming a sequence, enter the lowest number.)
4. Save your entry.
   - On the console: Select `Enter`.
   - On the PC: Press F10.
5. Enter the extension to assign to the Allowed List.
6. To assign the Allowed List to the telephone and assign other telephones:
   - If the next list number is sequential:
     — On the console: Select `Next` and repeat Step 5.
     — On the PC: Press F9 and repeat Step 5.

       The system saves your previous entry and shows the next entry number on line 1 of the screen.
   - If the next list number is not sequential:
     — On the console: Select `Enter` and then select `Exit`. Repeat Steps 2 through 5.
     — On the PC: Press F10 and then press F5. Repeat Steps 2 through 5.

   To assign the Allowed List to the telephone when all entries are complete:
   - On the console: Select `Enter`.
   - On the PC: Press F10.
7. Return to the System Programming menu.
   - On the console: Select `Exit` two times.
   - On the PC: Press F5 two times.

Disallowed Lists

Use this procedure to establish Disallowed Lists, consisting of telephone numbers that cannot be dialed from specified Intuity AUDIX LX ports.

A maximum of eight lists, numbered 0 through 7, with 10 entries each, numbered 0 through 9, is allowed. An * (asterisk) can also be entered in Release 3.1 or later versions of Intuity AUDIX LX. Each number can have a maximum of 11 digits, including a wildcard. Also beginning with Release 3.1 or later, a Disallowed List Number 7 is automatically assigned to all integrated VMI ports. Entries on List 7 are 0, 10, 11, 1809, 1700, 1900, 976, 1PP976 (P being any digit) and *. Integrated VMI ports are outward restricted and FRL is also set to minimize toll fraud by default.

To establish Disallowed Lists:

1. From the System Programming menu, select Tables.
   - On the console: Select `Tables`.
   - On the PC: Press F8.

   The system displays the Tables menu.
2. Select Disallowed Lists.
   - On the console: Select `Disallow`.
   - On the PC: Press F3.

   The system displays the Disallow List screen.
3. Enter the list (l = 0-7) and entry (e = 0-9) number. (If you are programming a sequence, enter the lowest number.)
4. Save your entry.
   - On the console: Select `Enter`.
   - On the PC: Press F10.
5. Erase the current area code/exchange.
   - On the console: Press Drop.
   - On the PC: Press ALT + P.
6. Enter the disallowed area code/exchange (up to 11 digits).
7. To save your entry and enter the next item in the Disallowed List:
   - If the next entry number is sequential:
     - On the console: Select `Next` and repeat Steps 5 and 6.
     - On the PC: Press F9 and repeat Steps 5 and 6.

       The system saves your previous entry and shows the next entry number on line 1 of the screen.

- If the next entry number is not sequential:
  - — On the console: Select `Enter` and repeat Steps 2 through 6.
  - — On the PC: Press F10 and repeat Steps 2 through 6.

To save your entry when all entries are complete:

- On the console: Select `Enter`.
- On the PC: Press F10.

8. Return to the System Programming menu.
   - On the console: Select `Exit`.
   - On the PC: Press F5.

Assign Disallowed Lists to Intuity AUDIX LX Ports

Use this procedure to assign established Disallowed Lists to Intuity AUDIX LX ports. Each restricted port can be assigned to more than one list.

To assign access to established Disallowed Lists to individual Intuity AUDIX LX ports:

1. From the System Programming menu, select Tables.
   - On the console: Select `Tables`.
   - On the PC: Press F8.

   The system displays the Tables menu.
2. Select Assign Disallowed Lists To.
   - On the console: Select `DisallowTo`.
   - On the PC: Press F4.

   The system displays the Disallow To List screen.
3. Enter the Disallowed List you want to assign. (If you are programming a sequence, enter the lowest number.)
4. Save your entry.
   - On the console: Select `Enter`.
   - On the PC: Press F10.
5. Enter the extension to assign to the Disallowed List.

6. To assign the Disallowed List to the port and assign another Disallowed List to other ports:
   - If the next list number is sequential:
     - — On the console: Select `Next` and repeat Step 5.
     - — On the PC: Press F9 and repeat Step 5.

       The system saves your previous entry and shows the next entry number on line 1 of the screen.
   - If the next list number is not sequential:
     - — On the console: Select `Enter` and then select `Exit`. Repeat Steps 2 through 5.
     - — On the PC: Press F10 and then press F5. Repeat Steps 2 through 5.

   To assign the Disallowed List to the port when all entries are complete:
   - On the console: Select `Enter`.
   - On the PC: Press F10.
7. Return to the System Programming menu.
   - On the console: Select `Exit` two times.
   - On the PC: Press F5 two times.

Assign Extensions for Night Service

Use this procedure to assign all extensions to a Night Service group for after-hours coverage.

A maximum of eight Night Service groups can be assigned (no more than one for each operator position assigned). Any number of telephones can be assigned to a Night Service group, and a telephone can belong to more than one group.

To assign all extensions to a Night Service group for after-hours coverage:

1. From the System Programming menu, select Night Service.
   - On the console: Select `NightSrvce`.
   - On the PC: Press F10.

   The system displays the Night Service menu.
2. Select Group Assignment.
   - On the console: Select `GroupAssign`.
   - On the PC: Press F1.

   The system displays the Night Serv Group Assign screen.
3. To add an extension to a Night Service group:
   - On the console: Select `Extensions`.
   - On the PC: Press F2.
4. Enter the attendant extension for which you are assigning Night Service.
5. Save your entry.
   - On the console: Select `Enter`.
   - On the PC: Press F10.
6. Enter the telephone extension you want to assign to the group.
7. To save your entry and assign extension to another service group operator:
   - If the next service group operator is sequential:
     - On the console: Select `Next` and repeat Step 6.
     - On the PC: Press F9 and repeat Step 6.

       The system saves your previous entry and shows the next service group operator on line 1 of the screen.
   - If the next service group operator is not sequential:
     - On the console: Select `Enter` and then select `Exit`. Repeat Steps 2 through 6.
     - On the PC: Press F10 and then press F5. Repeat Steps 2 through 6.

To save your entry when all entries are complete:

- On the console: Select `Enter`.
- On the PC: Press F10.

8. Return to the System Programming menu.
   - On the console: Select `Exit` two times.
   - On the PC: Press F5 two times.

Assign INTUITY AUDIX LX Calling Group for Night Service

Use this procedure to assign calling groups to a Night Service group for after-hours coverage.

A maximum of eight Night Service groups can be assigned (no more than one for each operator position assigned). Any number of telephones can be assigned to a Night Service group, and a telephone can belong to more than one group.

To assign calling groups to a Night Service group for after-hours coverage:

1. From the System Programming menu, select Night Service.
   - On the console: Select `NightSrvce`.
   - On the PC: Press F10.

   The system displays the Night Service menu.
2. Select Group Assignment.
   - On the console: Select `GroupAssign`.
   - On the PC: Press F1.

   The system displays the Night Serv Group Assign screen.
3. To add a calling group to a Night Service group:
   - On the console: Select `Calling Grp`.
   - On the PC: Press F1.
4. Enter the attendant extension for which you are assigning Night Service.
5. Save your entry.
   - On the console: Select `Enter`.
   - On the PC: Press F10.
6. Enter the calling group to be added.

7. To save your entry and assign extension to another service group operator:
   - If the next service group operator is sequential:
     - — On the console: Select `Next` and repeat Step 6.
     - — On the PC: Press F9 and repeat Step 6.

       The system saves your previous entry and shows the next service group operator on line 1 of the screen.
   - If the next service group operator is not sequential:
     - — On the console: Select `Enter` and then select `Exit`. Repeat Steps 2 through 6.
     - — On the PC: Press F10 and then press F5. Repeat Steps 2 through 6.

   To save your entry when all entries are complete:
   - On the console: Select `Enter`.
   - On the PC: Press F10.
8. Return to the System Programming menu.
   - On the console: Select `Exit` two times.
   - On the PC: Press F5 two times.

Intuity AUDIX LX System Administration

6

Overview

NOTE:
Some of the Intuity AUDIX LX screens are now Web-based administration and may not have been updated. Refer to the appropriate pages where you can access the Help topics for more information.

This chapter describes how to administer the Intuity AUDIX LX system for integration with the MERLIN LEGEND® or MERLIN MAGIX™ switch. To integrate the systems, check or administer the following pages on the Intuity AUDIX LX system:

- Switch Selection
- MWI Device Assignment
- Dial Plan Translation
- MWI Parameters
- Routing Table

This chapter also describes the procedure for entering the routing table, business schedules, and holiday schedules. You will need to enter the routing table if the system will be using trunk lines or automated attendants operating with different schedules.

Administering the Intuity AUDIX LX System for Switch Integration

Use the procedures below to configure the Intuity AUDIX LX system for operation with the MERLIN LEGEND/MAGIX Communications system.

NOTE:
If you make any changes to the following pages, you must stop and start the voice system for the changes to take effect.

Administration Main Menu

All procedures in this chapter begin at the Intuity AUDIX LX Web-based Administration main menu.

Verifying the Country and Switch

Use this procedure to check the country and switch for the system's switch integration. The selections in this page determine the defaults set in the system. If the system does not offer an exact match, contact your remote support center and ask them to select the country that matches the installation conditions as closely as possible.

NOTE:
Only the remote support center can set the country and switch options.

1. Start at the Administration main menu and select:

   Basic System Administration

   Switch Selection

   The Switch Selection page is displayed.

2. Verify that the Country-Switch parameters match your location. If they do not, contact your remote support center.
3. Click **Return to Main** to return to the Administration main menu.

Table 6-1. Switch Selection Page — Field Descriptions

Field	Description and Values
`Country-Switch`	Specifies the country-switch for which the system sets country-specific default parameters. Normally the country is factory-preset for your integration. Verify that the country matches your location. If it does not, contact your remote support center.

Setting the MWI Device Assignments

Complete this procedure to assign the channel group number(s) on which the system performs MWI updates.The procedure allows you to partition the channel(s) on which MWI updates are performed.

To assign a channel group here for MWI updates, you must have already administered the group using the Channels to Group option under the Voice System Administration, Voice Equipment Administration and Diagnostics page. See the Intuity AUDIX LX system installation book for your platform for the procedure.

Complete this procedure to assign the devices on which the system performs MWI updates.

1. Start at the Administration main menu select:

   Switch Administration

   Device Assignment

   The Device Assignment page is displayed.

2. Click **Add**. Use (Table 6-2) to modify the page. For additional information, click on the Help button.

3. Click **Update**.

   The system displays the following message:

   ```
   You need to restart the Voice System to make these
   changes active.
   ```

4. Click **OK** (ACKNOWLEDGE MESSAGE).

Table 6-2. Device Assignment Page — Field Descriptions

Field	Description	Values
<*switch*> Integration	Displays the switch selected on the Switch Selection page in the telephony interface.	Display only.
Link Test (Y/N)	These fields are not used for the MERLIN LEGEND/MAGIX integration.	
Link Test Interval		

Continued on next page

Table 6-2. Device Assignment Page — Field Descriptions — *Continued*

Field	Description	Values
Switch Number	Number that uniquely identifies the switch and is used to address it. The Avaya INTUITY system uses this number to differentiate between subscribers on different switches.	Usually matches the INTUITY AUDIX LX ® user switch number.
Device ID	Name(s) of the device(s) to be used for MWI update. The group number as administered on the Display Voice Equipment page, valid range 1 through 32. By default all channels are assigned to group 2; outcalling is always done on group 2. The device IDs can be comma-separated or specified in ranges. For example, device IDs 1, 2, 3, 4, 5, 16, and 18 can be specified in either of the following ways: 1,2,3,4,5,16,18 1-6,16,18 If all of the channels are assigned to Group 2 (the default), enter 2 (usually).	
Link Test No.	*This field is not used for MERLIN LEGEND/MAGIX integration.*	

Setting the Dial Plan Translations

Complete this procedure to set up the translations to be done on the calling party identification (CLI) and called party identification (CP ID) for incoming and outgoing calls to interface the INTUITY system and the switch.

Procedure

1. From the Administration main menu and select:

   Switch Administration

   Dial Plan Translation

   The Dial Plan Translation menu is displayed. This page contains your current settings.

2. Use Table 6-3 to modify the page.
3. Click **Update**.

The system displays the following message:

```
You need to restart the Voice System to make these
changes active.
```

4. Click **OK** (ACKNOWLEDGE MESSAGE).
5. Click **Return to Main** to return to the Administration main menu.

Table 6-3. Dial Plan Translation Page— Field Descriptions

Field	Description	Values
<*switch*> Integration	Displays the switch selected on the Switch Selection page.	Display only.
INTUITY Extension Length	Specifies the number of digits in the dial plan.	3 to 10 integers. Must be the same as the number of digits administered for the INTUITY prefix combined with the number of digits for the (start or end) extension number.
Switch Network Access Code	*This field is not used for MERLIN LEGEND/MAGIX integration.*	
Switch Prefix		
Switch Start Ext.	Specifies the first extension number in the range of allowed extension numbers.	The number of digits specified for the start and end extension numbers must be identical. For example, to specify the range 200 through 3999, enter: ■ Start extension 0200 ■ End extension 3900
Switch End Ext.	Specifies the last extension number in the range of allowed extension numbers.	

Continued on next page

Table 6-3. Dial Plan Translation Page— Field Descriptions — *Continued*

Field	Description	Values
INTUITY Prefix	This field is not used for the MERLIN LEGEND/MAGIX Integration.	
Switch Number	Number that uniquely identifies the switch and is used to address it. The Avaya INTUITY system uses this number to differentiate between subscribers on different switches.	Maximum of three digits, range 1 to 999.
Remote [Y/N]	For MERLIN LEGEND/MAGIX the option selected is always 'N'.	■ Y for remote ■ N for direct

Examples

- This example illustrates entries used for the common scenario where there is a single switch connection and fixed-length switch subscriber extensions.

Table 6-4.

INTUITY extension length = 4

Switch Prefix	Switch Start Ext.	Switch End Ext.	INTUITY Prefix	Switch ID	Remote [Y/N]
	0000	9999		1	N

- This example illustrates entry for a common networked switch scenario, where switch extensions are the same length but the network prefix varies in length. Remote flag N for switch 1 indicates that switch 1 and the INTUITY system are directly connected.

Table 6-5.

INTUITY extension length = 4

Switch Prefix	Switch Start Ext.	Switch End Ext.	INTUITY Prefix	Switch ID	Remote [Y/N]
860	3000	3999		1	N
755	1000	2999		1	N

If the Dial Plan Translation page is administered as above and if the CLI and CP ID numbers in a call information packet are 814444 and 3333, the switch integration software translates them into 4444 and 3333, respectively, as INTUITY mailbox numbers. The local switch may not pass the full network number for its own subscriber. Similarly, if a transfer is requested for INTUITY subscriber number 4444, the INTUITY subscriber number is translated to 814444 by the switch integration software. No prefix is appended for the local switch.

- This example illustrates entry for a networked switch scenario. The network dial plan is 7 digits. The INTUITY subscriber database is based on the network dial plan. However, each individual switch has a different dial plan (extension length). The call data from the local switch (switch 1) contains 4-digit extensions. The 3-digit network code for the local switch is used as a prefix to convert 4-digit extensions to 7 digits. The remote switch has a 3-digit dial plan and a 4-digit network code. The call data from the remote switch contains the 7-digit network number.

Table 6-6.

INTUITY extension length = 7

Switch Prefix	Switch Start Ext.	Switch End Ext.	INTUITY Prefix	Switch ID	Remote [Y/N]
	3000	3999	860	1	N
	4000	4999	755	1	N

Setting MWI Parameters

Complete this procedure to set parameters that determine how the system performs MWI updates. The parameters fulfill several purposes.

- The default prefix or suffix strings may need to be changed so that MWI updates can occur.
- To set the frequency with which the system performs background updates. In background updates, the system periodically refreshes the status of the MWI indicators. Staggering the updates prevents overload of the system resources. Enabling background updates is useful in situations where updates are pending because the switch or Avaya INTUITY system has been down.
- The system handles MWI updates for messages sent from broadcast mailboxes separately from other messages. You can alter the frequency with which broadcast message updates occur separately.
- To disable MWI updates altogether on the system, or block them during a specified period of time.

To set MWI parameters

1. From the Administration main menu select:

   Switch Administration

   MWI Parameters

   The system displays the MWI Parameters page with system defaults for your integration. If the parameters have been previously administered, the system displays the defaults instead.

2. Do you need to change the MWI prefix or suffix for the integration?

   - If yes, change the values in the `MWI on prefix, MWI on suffix, MWI off prefix, and MWI off suffix` fields, as appropriate to your switch (see Table 6-7).
   - If no, go to Step 3.

3. Do you want to block MWI updates (including background and broadcast refresh) from occurring for a specified period of time?

   - If yes, do the following:

     a. Enter the time for blocking to start in the `Block Start Time` field.

     b. Enter the time for blocking to end in the `Block End Time` field.

   - If no, go to Step 4.

4. Click **SAVE**.

   The system displays the following message:

   `You need to restart the Voice System to make these changes active.`

5. Click **OK** (ACKNOWLEDGE MESSAGE).

6. Click **Return to Main** to return to the Administration main menu.

Table 6-7. MWI Parameters Page — Field Descriptions

Field	Description	Values
<*switch*> Integration	Displays the switch selected on the Switch Selection page.	Display only.
MWI on prefix	This field is not used for the MERLIN LEGEND/MAGIX integration.	#53
MWI on suffix	This field is not used for the MERLIN LEGEND/MAGIX integration.	
MWI off prefix	A string added before the extension to turn off MWI indication.	#*53
MWI off suffix	This field is not used for the MERLIN LEGEND/MAGIX integration.	
MWI Update [Y/N]	Specifies whether the Avaya INTUITY system instructs the switch to perform MWI updates.	Remote support center adjustment only.
Background Refresh [Y/N]	Specifies whether the MWI status for each extension status is periodically checked and updated.	Remote support center adjustment only.
Background Interval	Sets the interval between MWI background updates for non-broadcast messages.	Remote support center adjustment only.

Continued on next page

Table 6-7. MWI Parameters Page — Field Descriptions — *Continued*

Field	Description	Values
`Background Updates`	Sets the number of background updates done in the interval entered in the `Background Interval` field.	Remote support center adjustment only.
`Broadcast Interval`	Sets the interval between MWI background updates for broadcast messages.	Remote support center adjustment only.
`Broadcast Updates`	Sets the number of broadcast updates done in the interval entered in the `Broadcast Interval` field.	Remote support center adjustment only.
`Block Start Time`	Sets the time when blocking of MWI updates begins.	Format *HH/MM/SS*, where: ■ *HH* is the hour in the 24-hour system (range 0 to 23). ■ *MM* is the minute (range 0 to 59). ■ *SS* is the second (range 0 to 59).
`Block End Time`	Sets the time when blocking of MWI updates ends.	

Stopping and Starting the Voice System

To execute any changes you have made to the switch integration administration windows in the procedures in this chapter, you must stop and then restart the voice system.

CAUTION:

Only stop the voice system when it is absolutely necessary. All calls in progress will be disconnected. Subscribers calling the INTUITY AUDIX LX system will hear a fast busy signal. Callers sent to INTUITY AUDIX LX coverage will hear ringing with no answer.

Complete this procedure to stop and restart the voice system.

1. Start at the Administration main menu select:

   Utilities

   Stop Messaging Software

   NOTE:
   Be sure to select `Stop Voice System`. Do not select `Shutdown Voice System`.

   The system displays the Wait Time page.

2. Enter a time between 0 and 600 seconds as the time to wait for calls in Click **Save**.

   The system displays the following message:

   ```
   The voice System has stopped
   Press OK to continue...
   ```

NOTE:
The system waits until all calls in progress disconnect before stopping the voice system.

3. Press **OK**.

   The system returns to the Stop Messaging Software page.

4. Click **Return to Main** to return to the Administration main menu.

5. Start at the Administration main menu and select:

   Utilities

   Start Messaging Software

   The system displays the following message:

   ```
   Startup of the Voice System is complete
   Hit Acknowledge key to continue...
   ```

6. Click **OK** (Acknowledge Message).

7. Click **Return to Main** to return to the Administration main menu.

Administering the Routing Table

The INTUITY AUDIX LX routing table serves 2 purposes:

- To apply different schedules for automated attendants
- To allow the system to use trunk lines

Administer the routing table if the integration will be using trunk numbers. If the integration will be using schedules for the automated attendants, add the mailbox(es), and administer the screens in the following order:

- Business Schedules
- Holiday Schedules
- Routing Table

Access the INTUITY AUDIX LX Screen

To access the INTUITY AUDIX LX screen, start at the Administration main menu and select:

Global Administration

Messaging Administration

The system displays the form used to administer the INTUITY AUDIX LX application (Figure 6-1).

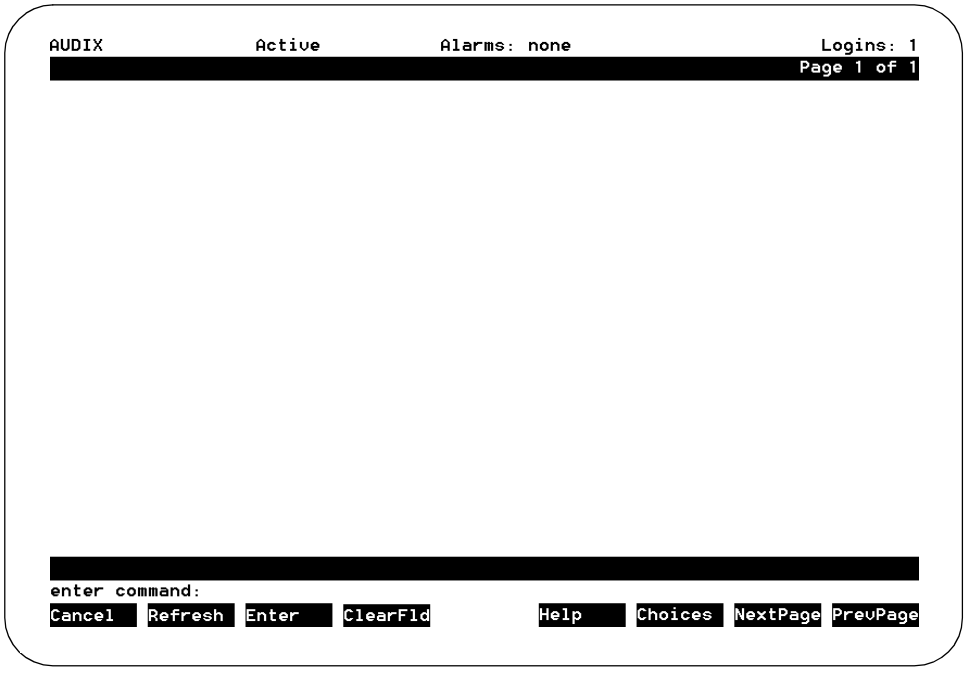

Figure 6-1. INTUITY AUDIX LX Screen

NOTE:
This screen provides command-line entry. The prompt for these forms is located toward the lower left-hand corner of the screen. To exit this form, enter **exit**.

Entering the Mailboxes for Schedules

See Worksheets B and D. Add any of the mailboxes listed on these forms to the system before entering the holiday schedule or the routing table.

NOTE:
Customers will need to record the information for these mailboxes and complete the automated attendant administration, depending upon the contract.

1. Enter **add su *extension number*** at the `enter command:` prompt.
2. Enter a name for the mailbox.
3. Press F3 (Enter) to save the administration.
4. Complete Step 1 through Step 3 for each mailbox.

See Intuity AUDIX LX *Messaging Solutions Release 4 Administration*, 585-310-564, for additional information.

Entering the Business Schedules

The business schedules must be entered before the routing table. Use the following procedure:

1. Enter **ch** at the `enter command:` prompt.

   The system displays a list of choices.

2. Select

```
> auto-attend-routing
    > business-schedule
```

   The system requests that you enter the business schedule number or named on the command line.

3. Enter the business schedule number or name.

   The system displays the Business Schedule (Figure 6-2).

```
AUDIX              Active          Alarms: none                    Logins: 1
change auto-attend-routing business-schedule bus1                  Page 1 of 1
                AUTO-ATTENDANT ROUTING BUSINESS SCHEDULES

                          Business Schedule 1: bus1

                  Follow Switch Night Service Status? y
           (Night Service applies to all hours not specified below)

              Day          Day Service Hours    Alternate Service Hours
              of             Start    End          Start    End
             Week            Time     Time         Time     Time
                           (hh:mm) (hh:mm)      (hh:mm) (hh:mm)

            Monday:           :   -   :          12:00 - 13:00
            Tuesday:          :   -   :          12:00 - 13:00
            Wednesday:        :   -   :          12:00 - 13:00
            Thursday:         :   -   :          12:00 - 13:00
            Friday:           :   -   :          12:00 - 13:00

            Saturday:         :   -   :            :   -   :
            Sunday:           :   -   :            :   -   :

enter command: change auto-attend-routing business-schedule bus1
Cancel  Refresh  Enter  ClearFld          Help  Choices  NextPage  PrevPage
```

Figure 6-2. Business Schedule

4. Enter the business schedule information.

   NOTE:
   Mailboxes must exist before they can be entered on this form.

5. Press F3 (Enter).

   The system saves the business schedule.

6. Enter **exit** to leave the INTUITY AUDIX LX screens or continue with "Entering the Holiday Schedules" below.

Entering the Holiday Schedules

The holiday schedules must be entered before the routing table. Use the following procedure:

NOTE:
If the system is not displaying the INTUITY AUDIX LX screen (Figure 6-1), you will need to select `AUDIX Administration` from the Administration main menu.

1. Enter **ch** at the `enter command:` prompt.

   The system displays a list of choices.

2. Select

```
> auto-attend-routing
    > holiday-schedule
```

The system requests that you enter the holiday schedule number or name on the command line.

3. Enter the holiday schedule number or name.

   The system displays the Holiday Schedule (Figure 6-3).

```
AUDIX              Active           Alarms: none                    Logins: 1
change auto-attend-routing holiday-schedule hol1                  Page 1 of 2
                  AUTO-ATTENDANT ROUTING HOLIDAY SCHEDULES

                           Holiday Schedule 1: hol1

                        Holiday        Date
                         Name         (mm/dd)     Mailbox

                 New Years             01/01      9010

                 Fourth of July        07/04      9010

                 Halloween             10/31      9010

enter command: change auto-attend-routing holiday-schedule hol1
Cancel  Refresh  Enter  ClearFld          Help  Choices  NextPage  PrevPage
```

Figure 6-3. Holiday Schedule

4. Enter the holiday schedule information.

   NOTE:
   Mailboxes must exist before they can be entered on this form.

5. Press F3 (Enter).

   The holiday schedule is saved.

6. Enter **exit** to leave the INTUITY AUDIX LX screens or continue with "Entering the Routing Table" below.

Entering the Routing Table

The routing table must be entered after any business schedules or holiday schedules that it references. Use the following procedure:

NOTE:
If the system is not displaying the INTUITY AUDIX LX screen (Figure 6-1), you will need to select `AUDIX Administration` from the Administration main menu.

1. Enter **ch** at the `enter command:` prompt.

   The system displays a list of choices.

2. Select

   ```
   > auto-attend-routing
       > routing-table
   ```

   The system displays the routing table (Figure 6-4).

```
AUDIX              Active          Alarms: none                    Logins: 1
change auto-attend-routing routing-table                          Page 1 of 2
                          AUTO-ATTENDANT ROUTING TABLE
                          Routing Table Administration

   Incoming Called      Business  Holiday     Day       Night     Alternate
        Number          Schedule  Schedule    Service   Service   Service
                                              Mailbox   Mailbox   Mailbox
 801                    login
 802                    bus1                  9001      9002      9003
 4003-4004              bus2      hol2        9004      9005      9006
 4005                   bus3      hol3        9007      9008      9009

enter command: change auto-attend-routing routing-table
Cancel  Refresh  Enter  ClearFld        Help  Choices  NextPage  PrevPage
```

Figure 6-4. Routing Table

3. Enter the routing table information.

   NOTE:
   Business schedules, holiday schedules, and mailboxes must exist before they can be entered on this form.

4. Press F3 (Enter).

   The routing table is saved.

5. Enter **exit** to leave the INTUITY AUDIX LX screen.

Integration Validation and Troubleshooting

7

Overview

NOTE:
Some of the procedures may be performed in the Web-based administration pages. See the Help on the appropriate page.

This chapter contains procedures for validating the switch integration and guidelines for troubleshooting integration problems.

Validating the switch integration requires use of the following procedures:

- Validating the tip/ring mapping
- Viewing the switch integration logs
- Understanding the switch integration log entries

Troubleshooting the integration (Table 7-5) involves determining the reasons why

- Calls are not integrated.
- Transfers fail.
- Message waiting indicators (MWIs) are not updated.
- Disconnect not recognized
- Outcalling not operational

Before You Begin

This chapter assumes that:

- The switch has been administered.
- The hardware and software necessary for integration has been installed.
- The Avaya INTUITY system has been administered for switch integration and has been stopped and restarted to activate the changes.

Integration Validation

Procedures to validate the integration require:

- Cooperation of the switch administrator

Validating the Tip/Ring Mapping

Use this procedure to verify that the mapping of extensions is correct between the tip/ring lines on the Avaya INTUITY system and the ports on the inband switch circuit card.

1. Dial the Avaya INTUITY number and verify that the correct voice port in the INTUITY AUDIX system answers.
2. Repeat Step 1 for each extension number.

These procedures have been executed during the installation process from the Install book. The above steps are to verify that the tip/ring Mapping has been done accurately.

Viewing the Switch Integration Logs

NOTE:
Switch Integration Logs are only with LAN integration at this time.

Use this procedure to view the log entries generated by the various switch integration processes. You can select the entries by date and time or by process or, by selecting an event sequence number, you can view only those entries associated with a specified event. Usually, selecting an event by sequence number presumes that you have first viewed the log to obtain the number of the event of interest. The log records the most recent 2000 events, and its contents are rolled over.

If calls are made to the system and the logs:

- Contain the normally expected data, the calls are integrated.
- Contain no data, calls are not integrated

- Contain only part of the normally expected data, most likely the switch is administered incorrectly. Contact your remote support center for assistance.

1. For viewing the Switch Integration Logs, refer to the Web-based administration, and click the Help button associated with that page.

Switch Integration Log Entries

Log entries for MERLIN LEGEND/MAGIX integrations are generated by the CHDIP, SWINDIP, and MWIDIP processes (Figure 7-1).

- Each CHDIP entry contains the raw data sent from the switch for one call.
- SWINDIP entries associated with the CHDIP entry contain the corresponding parsed and translated data.
- Each MWIDIP entry contains data about one MWI update.

```
21344                   MWIDIP                  Sat May  3 10:40:29 1997
MWI_ON:/SWID 1/CHGRP 2/AUDIX EXTN 4190/XLAT EXTN 4190/
21344                   MWIDIP                  Sat May  3 10:40:32 1997
MWI_SUCCESS:/#534190/
21345                   MWIDIP                  Sat May  3 10:40:34 1997
MWI_OFF:/SWID 1/CHGRP 2/AUDIX EXTN 4224/XLAT EXTN 4224/
10138                   CHDIP                   Sat May  3 10:40:42 1997
Raw:/CHANNEL 0/#00#2018##/
10138                   SWINDIP                 Sat May  3 10:40:42 1997
Parsed:/DIR_INT/CHANNEL 0/CHANEXT /CLI 2018/CP /
10138                   SWINDIP                 Sat May  3 10:40:42 1997
Translated:/DIR_INT/CHANNEL 0/CHANEXT /CLI 2018/CP /
21345                   MWIDIP                  Sat May  3 10:40:37 1997
MWI_SUCCESS:/#*534224/
```

Figure 7-1. Example of Switch Integration Log

The general format for the messages in Figure 7-1 is:

Sequence Entry type Process Date Entry Data

Details of these fields are elaborated in Table 7-1.

Table 7-1. Switch Integration Log — All Entries — Event ID

Field	Description
<*sequence number*>	Identifies the event. A CHDIP entry and its corresponding SWINDIP entries share a sequence number. Pairs of MWIDIP entries share a sequence number.
<*process name*>	CHDIP, SWINDIP, or MWIDIP
<*date and time*>	The time and date stamp of the event.

CHDIP — Raw Data

CHDIP entries for call data contain the following information (Table 7-2):

Table 7-2. CHDIP(Raw) — Field Description

Field	Description
Raw	Indicates the unparsed, untranslated data stream from the switch.
CHANNEL	The Intuity AUDIX LX channel number for the call. (Channel-to-extension mapping is done on the Voice Equipment window or as part of voice system administration.)
<data string>	The touch tones sent by the switch

SWINDIP — Parsed and Translated Data

SWINDIP entries contain the following data (Table 7-3):

Table 7-3. SWINDIP (Parsed and Translated) — Field Descriptions

Field	Description
Parsed and Translated	Indicates the data stream sent from the switch after parsing or translation, respectively.

Continued on next page

Table 7-3. SWINDIP (Parsed and Translated) — Field Descriptions — *Continued*

Field	Description
<*call type*>	Identifies the call as: ■ DIR_INT (direct internal) ■ DIR_EXT (direct external ■ NA_INT (no answer internal) (This category includes Call Forward All Calls.) ■ NA_EXT (no answer external) ■ BUSY_INT (busy internal) ■ BUSY_EXT (busy external) ■ REF_MWL (refresh MWL) ■ PRT_INS (port-in service) ■ PRT_OOS (port-out-of-service) ■ DAY_SVC (day service) ■ NGT_SVC (night service) ■ LWC (leave word calling) For DIR_INT, NA_INT, BUSY_INT calls and LWC both the CLI and CP are shown. For DIR_EXT, NA_EXT, and BUSY_EXT calls, only the CP is shown. For REF_MWL, PRT_INS, PRT_OOS, DAY_SVC, NGT_SVC and LWC, neither the CLI nor the CP is shown.
CHANNEL <*number*>	The Avaya INTUITY channel number for the call.
CHANEXT	The Avaya INTUITY extension number for the call.
CLI	The extension of the calling party, if available (see <*call type*> above). The number of digits in the parsed and translated CLI may differ depending on how the dial plan is administered on the Dial Plan Translation page. CLI is only an informational message sent by the switch.
CP	For MERLIN LEGEND/MAGIX, the extension of the called party will be the same as the <call type> mentioned above. CPS is only an informational message sent by the switch

NOTE:
Either one of these fields may be displayed, depending on the switch. (Channel-to-extension mapping is done on the Voice Equipment window as part of voice system administration.)

MWIDIP— MWI Updates

MWDIP entries are of two types. One type provides information on requests for MWI updates that the Avaya INTUITY system sends to the switch. The other provides information on the status of the updates.

MWIDIP MWI request entries contain the following data (Table 7-4):

Table 7-4. MWIDIP (MWI Requests) — Field Descriptions

Field	Description
`MWI_ON` or `MWI_OFF`	Indicates whether MWI is to be turned on or off.
`SWID` <*number*>	Uniquely identifies the switch in the Avaya INTUITY system.
`CHGRP`	Identifies the Avaya INTUITY channel group for the update. (Extension-to-group mapping is done on the Voice Equipment window as part of voice system administration.)
`AUDIX EXTN`	The pilot INTUITY AUDIX extension number.
`XLAT EXTN`	For MERLIN LEGEND/MAGIX this should be the same as the AUDIX extension.

Integration Troubleshooting

Use Table 7-5 to troubleshoot problems with the integration.

Table 7-5. Troubleshooting Scenarios

Trouble	Possible Reason	Possible Solutions
Calls not integrated (no call data displayed in the switch integration logs)	Incorrect switch settings for translations, class or service, or subscriber setup. Work with the switch administrator to correct the switch settings.	
Transfers failing	Incorrect transfer administration on the Avaya INTUITY system.	Verify the transfer restrictions administered for INTUITY AUDIX.
	Inappropriate transfer restrictions set on the switch.	Ask the switch administrator to check any transfer restrictions set on the switch.
	Dial tone is not detected and the Avaya INTUITY transfer function times out. due to a mismatch in the tone parameters between the switch and the Avaya INTUITY system.	Work with the switch administrator to check the tone parameters on the switch, or use the Tone Capture and Analysis window to check the switch tones. Verify that matching parameters are set on the Avaya INTUITY system. See information on the Dial Tone page and the Tones Administration pages in Appendix C, “Troubleshooting Procedures”, in the system installation book for your platform.

Continued on next page

Table 7-5. Troubleshooting Scenarios — *Continued*

Trouble	Possible Reason	Possible Solutions
MWI updates not occurring	Inappropriate switch setup.	■ Verify that the on/off prefix is administered correctly. ■ Check if the suffix is set correctly on the MWI parameter screen. ■ Test if the dial tone is not being recognized. ■ Ensure that the channels are assigned to the correct groups. See Chapter 6, "Intuity AUDIX LX System Administration" for more information.
	Incorrect parameters or parameter mismatch between the switch and the Avaya INTUITY system.	■ Verify that the MWI update flag is set to y (yes). If necessary, contact your remote support center to set the flag correctly. ■ Request that the switch administrator verify administration for MWI on the switch.
	Incorrect switch settings for translations, class or service, or subscriber setup.	Work with the switch administrator to correct the switch settings.
	Dial tone detection failure	Work with the switch administrator to check the tone parameters on the switch, or use the Tone Capture and Analysis window to check the switch tones. Verify that matching parameters are set on the Avaya INTUITY system. See information on the Dial Tone page and the Tones Administration page in Appendix C, "Troubleshooting Procedures", in the system installation book for your platform.
Disconnect not recognized	For local subscriber calls, the wink may not be detected.	Check for the right matching wink interval and/or make sure that the switch is set right for wink detection
	For external calls, the far-end disconnect tone may not be recognized.	Work with the switch administrator to check the tone parameters on the switch, or use the Switch Tones page to check the switch tones. Verify that matching parameters are set on the Avaya INTUITY system. See information on the Dial Tone page and the Tones Administration pages in Appendix C, "Troubleshooting Procedures", in the system installation book for your platform.

Continued on next page

Table 7-5. Troubleshooting Scenarios — *Continued*

Trouble	Possible Reason	Possible Solutions
Outcalling not working	Dial tone detection failure	Work with the switch administrator to check the tone parameters on the switch, or use the Switch Tones page to check the switch tones. Verify that matching parameters are set on the Avaya INTUITY system. See information on the Dial Tone page and the Tones Administration pages in Appendix C, “Troubleshooting Procedures”, in the system installation book for your platform.

System Security and Toll Fraud

A

Telecommunications fraud is the unauthorized use of another company's telecommunications service. This type of fraud has been in existence since the 1950's with the introduction of Direct Distance Dialing (DDD).

Twenty years later, Remote Access became a target of individuals seeking unauthorized network access. Now, with the added capabilities of voice mail and automated attendant services, customer premises equipment-based toll fraud has expanded as a new type of communications abuse. With its subculture of "hackers" and "phreakers," telecommunications fraud has rapidly become a highly profitable criminal activity.

Protecting Your System

Voice messaging toll fraud has risen dramatically in recent years. Now more than ever, it is imperative that you take steps to secure your system. Callers into the voice messaging/automated attendant system may transfer to an outgoing trunk if adequate security measures are not implemented. Callers who have unauthorized access to a voice mailbox can use it as a message drop for communications at your expense on your 800 numbers. Securing your system means protecting the switch, protecting the voice messaging system, and protecting any automated attendant applications.

Switch Security

The only tool a criminal needs to breach an inadequately secured system is a touch-tone telephone. If criminals can gain access to an inside dial tone, they will attempt to gain access to an outside line by using normal switch functions such as:

- Automatic Routing System (ARS) access codes
- Pool Access Codes

Security Tips

To help prevent toll fraud at the switch, follow these guidelines:

- Assign toll restrictions to voice messaging system and automated attendant ports.
- If you do not to use the outcalling features of the voice messaging system, restrict the outward calling capability of all voice ports.
- Use a dial plan that does not allow extensions beginning with the same digits as ARS, TAC, or verification and test codes.
- Inform all system operators that they are not to dial outside calls. Request that operators report all attempts to bypass switch restrictions to the telecommunications department for repairs or to the corporate security office for investigation.
- Restrict the numbers for outcalling and AMIS with a disallowed list.

Voice Messaging System Security

With regard to toll fraud, voice messaging systems have two areas of weakness:

- Codes that transfer to inside or outside dial tone
- Mailboxes that can be used as message drops

Once thieves transfer to inside dial tone, they have access to any unprotected switch features. Preventing this type of abuse requires security at both the switch and at the voice messaging system.

Once thieves break into a mailbox, they can use it as a message drop for untraceable calls or for illegal activities. If you have 800 lines that can connect to your voice messaging system, they can use them to pass stolen information around at your expense. If you have user-administrable outcalling, they can pass stolen information around at your expense automatically. Preventing this type of abuse requires security at the voice messaging system and on the part of your subscribers.

- Cellular telephones can be monitored. If a subscriber enters a mailbox number and a password on a cellular telephone, the mailbox number and the password will be known to anyone listening.
- To break a password, every word in a computerized 100,000 word-processor spelling checker or dictionary can be tried in just a few minutes. In a slightly longer time, every digit combination from 1 to 100,000 can be tried.

Security Tips

To help prevent toll fraud at the voice messaging system, follow these guidelines:

- Do not create voice mailboxes before they are needed.
- Deactivate unassigned mailboxes. When an employee leaves the company, close or reassign the mailbox.

- Do not have permanent “guest” mailboxes (mailboxes without a physical extension that are loaned to outsiders for the duration of a project). If you need a guest mailbox, assign it when it is needed and deactivate or change its password immediately after it is no longer needed. Do not reassign a guest mailbox without changing the password.
- Lock out multiple unsuccessful attempts to enter a voice mailbox on a single call. (Allow no more than two or three attempts on the same call.)
- Do not use default initial passwords that follow any scheme. Have a list of random passwords and select one when you create the mailbox. Require that the mailbox owner personally appear at the corporate security office or telecommunications office to obtain the initial password. Go over the subscriber password guidelines with the subscriber when you give out the initial password.
- Make sure subscribers change the initial password the first time they log in to the INTUITY AUDIX LX system by making the initial password shorter than the minimum password length.
- Use the password-aging feature so that users must change their passwords monthly.
- Discourage the practice of writing down passwords, storing them, or sharing them with others.
- Restrict the use of outcalling to personnel who actually need it.
- Restrict the number of digits that can be used for outcalling to seven or ten if possible. (Outcalling to pagers may require more.)
- Inform all system operators that they are not to dial outside calls. Request that operators report all attempts to bypass switch restrictions to the telecommunications department for repairs or to the corporate security office for investigation.
- Inform users that programming passwords onto auto-dial buttons is a breach of corporate security.
- Inform employees on how to report suspected toll fraud to the corporate security office.
- Monitor call detail recording (SMDR) reports, call traffic reports, INTUITY AUDIX LX traffic reports, and other available reports regularly.

Automated Attendant System Security

Automated attendants are used by many companies to augment or replace a switchboard operator. When an automated attendant answers, the caller is generally given several options that are appropriate to the company’s business.

- There may be other unstated options such as a code for dial tone or a code for transfers that allow criminals to access unanticipated parts of the telecommunications system.

- Pressing [*], [7] ([*], [T]) will cause a transfer from the automated attendant to the voice messaging service.
- Even anticipated transfers may cause problems if they are not well thought out.
- Naive operators may dial an outside call for someone who has dialed 0 and complains of trouble making a call.

In some automated attendant systems, option [9] is to access dial tone.

Security Tips

To help prevent toll fraud at the automated attendant, follow these guidelines:

- Do not allow transfers to inside or outside dial tone.
- Restrict transfers to subscribers only.
- Inform all system operators that they are not to dial outside calls. Request that operators report all attempts to bypass switch restrictions to the telecommunications department for repairs or to the corporate security office for investigation.
- Inform employees on how to report suspected toll fraud to the System Administrator.
- Monitor call detail recording (SMDR) reports, call traffic reports, INTUITY AUDIX LX traffic reports, and other available reports regularly.

Password Guidelines

To minimize the risk of unauthorized persons accessing subscriber mailboxes and using them for toll fraud, inform all system users of these guidelines for voice messaging system passwords.

- Mailbox passwords are required.
- Require that passwords be as long as feasible, with a minimum of five digits, and a length that is at least one digit longer than the maximum extension length.
- System users must change the initial password the first time they log in to the voice messaging system. To ensure this, the initial password should have fewer digits than the minimum password length.
- Never have greetings that state you will accept third party billed calls. A greeting like this allows unauthorized individuals to charge calls to your company. If a user calls somebody within the company and receives a greeting like this, they should point out the vulnerability to the person and recommend that they change the greeting immediately.
- Never use obvious or trivial passwords such as your telephone extension, room number, employee identification number, social security number, or the birthday of any family member. Also avoid easily guessed numeric combinations such as 1, 3, 9, 7 and 2, 4, 8, 6 (geometric pattern on the dial), 9, 9, 9, 9, 9, 9 (repeated digits), and 7, 2, 7, 7, 9, 6, 7, 3 (“password” spelled out on the dial).
- Passwords should not be written down, stored, or shared with others.
- Passwords must not be programmed into auto-dial buttons. Violation will result in an entry in the employees permanent personnel record.
- If subscribers receive any strange voice mail messages, find that their greeting or password has been changed, or suspect for any reason that their voice mailbox is being used by someone else, they should contact the System Administrator immediately.

Switch Administration

The measures you can take to minimize the security risk of owning a telecommunications system depend on how the telecommunications system and any associated voice messaging or automated attendant system is used.

To minimize the risk of unauthorized persons using the voice messaging or automated attendant systems to make toll calls, administer the voice ports on your switch in any of the following ways:

Restrict Outward Dialing

A voice port with outward restriction cannot make *any* outside calls unless an allowed number list is used for specific area codes and/or exchanges that can be called. Outward restriction prevents or limits outcalling and AMIS networking.

Restrict Toll Areas

A voice port with toll restriction cannot make toll calls, but it can still make local calls. Toll restriction may prevent or limit outcalling and AMIS networking. An allowed number list can be used for specific area codes and/or exchanges that can be called.

Create Disallowed Number Lists

When a voice port is unrestricted or has toll restriction, a disallowed number list can be used to prevent calls to specific numbers, specific exchanges within all area codes, or specific numbers. There can be a maximum of eight disallowed lists in the MERLIN LEGEND/MAGIX system with a maximum of ten numbers on each list. Each voice port can be assigned any or all of the disallowed number lists.

Create Allowed Number Lists

When a voice port is outward or toll restricted, an allowed number list can be used to allow calls to specific area codes and/or exchanges. When outcalling or AMIS networking is required, using outward or toll restriction in combination with an allowed number list limits the risk of unauthorized persons using the voice messaging or automated attendant systems to make toll calls because calls can only be made to the specified area codes and/or exchanges.There can be a maximum of eight allowed lists in the MERLIN LEGEND/MAGIX system with a maximum of ten numbers on each list. Each voice port can be assigned any or all of the allowed number lists.

Restrict AMIS Networking Number Ranges

To increase security for AMIS analog networking, including the Message Delivery service, restrict the number ranges that may be used to address messages. If possible, also place outward or toll restriction on the voice ports and use an allowed number list.

INTUITY AUDIX LX Administration

To minimize the risk of unauthorized persons using the Intuity AUDIX LX system to make toll calls, administer the Intuity AUDIX LX system in any of the following ways:

Outcalling

Outcalling uses the voice messaging ports. If mailbox security is broken, unauthorized persons can use outcalling to transfer messages at your expense. If you need outcalling, restrict it as far as possible to eliminate the possibilities for theft of services.

- Do not enable outcalling at all if you do not need it.
- Do not enable outcalling for subscribers who do not need it.
- If outcalling is used only to ring in-house telephones that do not have message waiting lamps, restrict the number of digits to the maximum length of extensions.
- If possible, restrict outcalling to the local area (7 digits) or North America (10 digits).
- If outcalling must be allowed to pagers, use pagers that have individual DID numbers so that pager identification digits are not required and restrict any additional digits for caller identification to the minimum possible.
- If a limited number of pagers are in use, consider putting the pager numbers on an unrestricted calling list so that outcalling can be effectively limited to only those numbers.

Mailbox Administration

The use of Intuity AUDIX LX system security features in combination with mailbox administration can help reduce the risk of unauthorized use of mailboxes.

- Use the longest feasible password length. The Intuity AUDIX LX system allows passwords up to 15 digits, and you can specify the minimum number of digits required. Use a minimum of five digits, and a length at least one digit longer than the extension number.

- Lock out multiple consecutive attempts to enter a voice mailbox. The Intuity AUDIX LX system has a password time-out feature that allows callers three attempts in one call to correctly enter their password before they are automatically disconnected. You can also specify how many consecutive invalid attempts are allowed before a voice mailbox is locked.
- Deactivate unassigned voice mailboxes. When an employee leaves the company, close or reassign the voice mailbox.
- Do not create voice mailboxes before they are needed.
- Avoid or closely monitor the use of “guest” mailboxes.

Basic Call Transfer

With Basic Call Transfer, when a caller enters [*], [T], the Intuity AUDIX LX system processes the call as follows:

1. The Intuity AUDIX LX system verifies that the digits entered contain the same number of digits as administered on the Intuity AUDIX LX system for extension length.

   If call transfers are restricted to system users, the Intuity AUDIX LX system also verifies that the digits entered match the extension number for an administered user.

2. If Step 1 is successful, the Intuity AUDIX LX system performs a switch-hook flash, putting the caller on hold.

   NOTE:
   If step 1 is unsuccessful, the Intuity AUDIX LX system plays an error message and prompts the caller for another try.

3. The Intuity AUDIX LX system sends the digits to the switch.
4. The Intuity AUDIX LX system completes the transfer.

With Basic Call Transfer, a caller can dial any number provided the number of digits matches the length of a valid extension. If an unauthorized caller dials 9x11 (where “x” is 1 through 9), the call may go outside. Therefore extension numbers of the form 9x11 should not be used for mailboxes or for system users.

If call transfers are restricted to system users, a caller cannot initiate a transfer to an off-premises destination unless the digits entered match an administered user’s mailbox identifier. To ensure the integrity of the user restriction, do not administer mailboxes that start with the same digit(s) as a valid switch trunk access code.

Detecting Toll Fraud

Some of the Intuity AUDIX LX system reports are valuable in determining if your voice messaging or automated attendant systems are being used for fraudulent purposes.

Call Detail Recording

With Station Message Detail Recording (SMDR) activated for incoming calls, you can check the calls in to your voice mail ports. A series of short holding times may indicate repeated attempts to enter voice mailbox passwords.

Review SMDR reports for the following symptoms of voice messaging abuse:

- Short holding times on calls where voice messaging is the originating or terminating endpoint
- Calls to international locations not normal for your business
- Calls to suspicious destinations
- Numerous calls to the same number
- Undefined account codes

NOTE:
The MERLIN LEGEND/MAGIX system only records the last extension on the call. Internal toll abusers transfer unauthorized calls to another extension before they disconnect so that the SMDR does not track the originating station. If the transfer is to your voice messaging system, it could give a false indication that your voice messaging system is the source of the toll fraud.

Review the Call Accounting System (CAS) and HackerTracker documentation on how to use SMDR reports.

Intuity AUDIX LX Traffic Reports

The Intuity AUDIX LX system tracks traffic data over various timespans. Reviewing these reports on a regular basis helps to establish traffic trends. If increased activity or unusual usage patterns occur, such as heavy call volume on ports assigned to outcalling, they can be investigated immediately. In addition, the AUDIX Data Acquisition Package (ADAP) uses an external PC (running MS-DOS) to provide extended storage and analysis capabilities for the traffic data. You can also use the AUDIX Administration Log and Activity Log to monitor usage and investigate possible break-in attempts.

Avaya Inc. Statement of Direction

The telecommunications industry is faced with a significant and growing problem of theft of customer services. To aid in combating these crimes, Avaya intends to strengthen relationships with its customers and its support of law enforcement officials in apprehending and successfully prosecuting those responsible.

No telecommunications system can be entirely free from risk of unauthorized use. But diligent attention to system management and to security can reduce that risk considerably. Often a tradeoff is required between reduced risk and ease of use and flexibility. Customers who use and administer their systems make this tradeoff decision. They know best how to tailor the system to meet their unique needs and, necessarily, are in the best position to protect the system from unauthorized use.

Because the customer has ultimate control over the configuration and use of Avaya services and products it purchases, the customer properly bears responsibility for fraudulent uses of those services and products.

To help customers use and manage their systems in light of the tradeoff decisions they make and to ensure the greatest security possible, Avaya commits to the following:

- Avaya products and services will offer the widest range of options available in the industry to help customers secure their communications systems in ways consistent with their telecommunications needs.
- Avaya is committed to develop and offer services that, for a fee, reduce or eliminate customer liability for PBX toll fraud, provided the customer implements prescribed security requirements in its telecommunications systems.
- Avaya's product and service literature, marketing information and contractual documents will address, wherever practical, the security features of our offerings and their limitations, and the responsibility our customers have for preventing fraudulent use of their Avaya products and services.
- Avaya sales and service people will be the best informed in the industry on how to help customers manage their systems securely. In their continuing contacts with customers, they will provide the latest information on how to do that most effectively.
- Avaya will train its sales, installation and maintenance, and technical support people to focus customers on known toll fraud risks; to describe mechanisms that reduce those risks; to discuss the tradeoffs between enhanced security and diminished ease of use and flexibility; and to ensure that customers understand their role in the decision-making process and their corresponding financial responsibility for fraudulent use of their telecommunications system.

- Avaya will provide education programs for customers and our own people to keep them apprised of emerging technologies, trends, and options in the area of telecommunications fraud.
- As new fraudulent schemes develop, we will promptly initiate ways to impede those schemes, share our learning with our customers, and work with law enforcement officials to identify and prosecute fraudulent users whenever possible.

We are committed to meeting and exceeding our customer's expectations, and to providing services and products that are easy to use and are of high value. This fundamental principle drives our renewed assault on the fraudulent use by third parties of our customers' communications services and products.

Avaya's Security Offerings

Avaya has developed a variety of offerings to assist in maximizing the security of your system. These offerings include:

- Security Audit Service of your installed systems.
- Fraud Intervention Service.
- Individualized Learning Program, a self-paced text that uses diagrams of system administration screens to help customers design security into their systems. The program also includes a videotape and the *GBCS Products Security Handbook*.
- Call Accounting package that calls you when preset types and thresholds of calls are established.
- Remote Port Security Device that makes it difficult for computer hackers to access the remote maintenance ports.
- Software that can identify the exact digits passed through the voice mail system.

For more information about these services, see the *Avaya Products Security Handbook.*

Avaya Toll Fraud Crisis Intervention

If you suspect you are being victimized by toll fraud or theft of service and need technical support or assistance, call the Avaya National Service Assistance Center (NSAC) immediately.

MERLIN LEGEND/MAGIX Communications System Repair (NSAC)	800 628-2888
AUDIX Help LIne	800 562-8349

NOTE:
These services are available 24 hours a day, 365 days a year. Consultation charges may apply.

Avaya Corporate Security

Whether or not immediate support is required, please report all toll fraud incidents perpetrated on Avaya services to Avaya Technologies National Service Assistance Center (NSAC) at 800-288-2888. In addition to recording the incident, Avaya services are available for consultation on product issues, investigative support, law enforcement, and education programs.

Glossary

Numerics

5ESS Switch
A central office switch manufactured by Avaya Technologies that can be integrated with the Intuity AUDIX LX system.

A

accessed message
A message that was received and scanned (either the entire message or just the header).

ACA
See *automatic circuit assurance*.

ACD
See *automatic call distribution*.

activity menu
The list of options spoken to subscribers when they first access a messaging system. Selecting an activity is the starting point for all subscriber operations.

ADAP
See *administration and data acquisition package*.

address
Intuity AUDIX LX subscriber identification, containing the subscriber's extension and machine, that indicates where the system needs to deliver a message. An address may include several subscribers or mailing lists. Name or number addressing can be selected with the ☐ A (Address) command.

adjunct
A separate system closely integrated with a switch, such as a Intuity AUDIX LX system or a call management system (CMS).

administration
The process of setting up a system (such as a switch or a messaging system) to function as desired. Options and defaults are normally set up (translated) by the system administrator or service personnel.

administration and data acquisition package (ADAP)
A software package that allows the system administrator to transfer system subscriber, maintenance, or traffic data from an Intuity AUDIX LX system to a personal computer (PC).

ADU
See *asynchronous data unit*.

alarm log
A list of alarms that represent all of the active or resolved problems on a Intuity AUDIX LX system. The alarm log is stored in a software file on disk and can be accessed either locally or remotely on a terminal connected to the system.

alarms
Hardware, software, or environmental problems that may affect system operation. Alarms are classified as *major*, *minor*, or *warning*.

alphanumeric
Consisting of alphabetic and numeric symbols or punctuation marks.

ALT
See *assemble, load, and test.*

American wire gauge (AWG)
A standard measuring gauge for nonferrous conductors.

AMIS
See *Audio Messaging Interchange Specification*.

AMIS prefix
A number added to the destination number to indicate that it is an AMIS analog networking number.

analog networking
A method of transferring a message from one messaging system to another whereby the message is played back (voiced) during the transfer.

analog signal
In teleprocessing usage, a communications path that usually refers to a voice-grade telephone line.

announcement
A placeholder within the Intuity AUDIX LX system for playing fragments. Each event that may occur within AUDIX has one or more announcement numbers permanently assigned to it. Fragment numbers are then assigned to the announcement numbers.

announcement fragment
A numbered piece of spoken information that makes up a system message or prompt.

antistatic
A treatment for material to prevent the build-up of static electricity.

API
See *application programming interface.*

application
A computer software program.

application identifier
A two-letter code used in the administrator's log to identify the application or subsystem for which an alarm is being generated. There are 11 application identifiers as follows: CA (Call Accounting), EL (Enhanced List), LF (Lodging Fax), LG (Intuity AUDIX LX Lodging), ML (MERLIN LEGEND),

MT (Maintenance), NW (Digital Networking), SW (Switch Integration), VM (Voice Messaging), VP (Voice Processing), and VR (Voice Response).

application programming interface (API)
A set of formalized software calls and routines that an application program can reference to access underlying network services.

assemble, load, and test (ALT)
The Avaya factory process that preloads software, installs hardware, and tests the system prior to shipping.

ASP
advanced signal processor

asynchronous communication
A method of data transmission in which bits or characters are sent at irregular intervals and spaced by start and stop bits rather than time. See also *synchronous communication*.

asynchronous data unit (ADU)
An electronic communications device that can extend data transmission over asynchronous lines more than 50 feet in length. Recommended ADUs for use with the Intuity AUDIX LX system include Z3A1 or Z3A4.

asynchronous transmission
A form of serial communications where each transmitted character is bracketed with a start bit and one or two stop bits. The Intuity AUDIX LX system provides asynchronous EIA-232 capabilities for Intuity AUDIX LX Digital Networking, if required.

attendant console
A special-purpose telephone with numerous lines and features usually located at the front desk of a business or other organization. The front desk attendant uses this telephone to answer and transfer calls.

Audio Messaging Interchange Specification (AMIS)
An analog networking protocol that allows subscribers to exchange messages with any messaging system that also has AMIS Analog Networking capabilities. Messages can be exchanged with subscribers on Intuity AUDIX LX systems as well as with subscribers on remote messaging systems made by vendors other than Avaya Technologies.

Audio Information Exchange (AUDIX)
A complete messaging system accessed and operated by touch-tone telephones and integrated with a switch.

audit
A software program that resolves filesystem incompatibilities and updates restored filesystems to a workable level of service. Audits are done automatically on a periodic basis, or can be performed on demand.

AUDIX
See *Audio Information Exchange*.

autodelete
An Intuity AUDIX LX feature that allows subscribers to designate that faxes be automatically deleted from their mailboxes after they are printed.

automated attendant
A Intuity AUDIX LX system feature that allows subscribers to set up a main extension number with a menu of options that routes callers to an appropriate department at the touch of a button.

automatic call distribution (ACD)
The System 85, Generic 2, or Generic 3 call-distribution group of analog ports that connects Intuity AUDIX LX subscribers to the system. See also *call-distribution group*.

automatic circuit assurance (ACA)
A feature of the switch that keeps records of both very long and very short calls and notifies the attendant when these calls exceed a certain parameter. The logic is that many very short calls or one very long one may suggest a trunk that is hung, broken, or out of order. The attendant can then physically dial into the trunk to check it.

automatic message scan
An Intuity AUDIX LX feature that allows subscribers to scan all message headers and messages at the touch of two buttons. With Intuity AUDIX LX FAX Messaging, this feature allows all new faxes to be bundled and transmitted over a single fax call delivery call. Also called *autoscan*.

autoprint
An Intuity AUDIX LX feature that allows subscribers to designate that faxes be automatically sent to a specified print destination.

autoscan
See *automatic message scan*.

AWG
See *American wire gauge.*

B

background testing
Testing that runs continuously when the system is not busy doing other tasks.

backplane
A centrally located device within a computer to which individual circuit cards are plugged for communication across an internal bus.

backup
A duplicate copy of files and directories saved on a removable medium such as floppy diskette or tape. The back-up filesystem can be copied back (restored) if the active version is damaged (corrupted) or lost.

basic input/output system (BIOS)
A system that contains the buffers for sending information from a program to the actual hardware device for which the information is intended.

basic call transfer
The switch-hook flash method used to send the Intuity AUDIX LX transfer command over analog voice ports.

basic rate access
See *basic rate interface*.

basic rate interface (BRI)
International standard protocol for connecting a station terminal to an integrated systems digital network (ISDN) switch. ISDN BRI supports two 64-Kbps information-bearer channels (B1 and B2), and one 16-Kbps call status and control (D) channel (a 2B + D format). Also called b*asic rate access*.

binary synchronous communications (BSC)
A character-oriented synchronous link protocol.

BIOS
See *basic input/output system*.

body
The part of a Intuity AUDIX LX voice mail that contains the actual spoken message. For a leave word calling (LWC) message, it is a standard system announcement.

boot
The operation to start a computer system by loading programs from disk to main memory (part of system initialization). Booting is typically accomplished by physically turning on or restarting the system. Also called *reboot*.

boot filesystem
The filesystem from which the system loads its initial programs.

BRI
See *basic rate interface*.

broadcast messaging
An Intuity AUDIX LX feature that enables the system administrator and other designated subscribers to send a message to all subscribers automatically.

BSC
See *binary synchronous communications*.

buffer
A temporary storage area used to equalize or balance different operating speeds. A buffer can be used between a slow input device, such as a terminal keyboard, and the main computer, which operates at a very high speed.

bulletin board
An Intuity AUDIX LX feature that allows a message to be played to callers who dial the bulletin board extension. Callers cannot leave a message since it is a listen-only service. Also called *information service*.

bundling
Combining several calls and handling them as a single call. See also *automatic message scan*.

bus
An electrical connection/cable allowing two or more wires, lines, or peripherals to be connected together.

busy-out/release
To remove a Intuity AUDIX LX device from service (make it appear busy or in use), and later restore it to service (release it). The Intuity AUDIX LX switch data link, voice ports, or networking ports can be busied out if they appear faulty or when maintenance tests are run.

C

CA
Call accounting system application identifier. See *application identifier*.

call accounting system (CAS)
A software device that monitors and records information about a calling system.

call-answer
An Intuity AUDIX LX feature that allows the system to answer a call and record a message when the subscriber is unavailable. Callers can be redirected to the system through the call coverage or call forwarding switch features. Intuity AUDIX LX subscribers can record a personal greeting for these callers.

call-answer language choice
The capability of subscriber mailboxes to accept messages in different languages. For the Intuity AUDIX LX application, this capability exists when the multilingual feature is turned on.

callback number
In AMIS analog networking, the telephone number transmitted to the recipient machine to be used in returning messages that cannot be delivered.

call classification analysis (CCA)
A process that enables application designers to use information available within the system to classify the disposition of originated and transferred calls.

call coverage
A switch feature that defines a preselected path for calls to follow if the first (or second) coverage points are not answered. The Intuity AUDIX LX system can be placed at the end of a coverage path to handle redirected calls through call coverage, send all calls, go to cover, etc.

call data handler process (CDH)
A software process that accumulates generic call statistics and application events.

call detail recording (CDR)
A switch feature that uses software and hardware to record call data. See also *call detail recording utility*.

call detail recording utility (CDRU)
Applications software that collects, stores, optionally filters, and outputs call detail records for direct or polled output to peripheral devices. See also *call detail recording*.

call delivery
See *message delivery*.

call-distribution group
The set of analog port cards on the switch that connects switch subscribers to the Intuity AUDIX LX system by distributing new calls to idle ports. This group (or split) is called automatic call distribution (ACD) on System 85, Generic 2, and Generic 3 and uniform call distribution (UCD) on System 75, Generic 1, and Generic 3. See also *automatic call distribution* and *uniform call distribution*.

call management system (CMS)
An inbound call distribution and management reporting package.

called tone (CED tone)
The distinctive tone generated by a fax endpoint when it answers a call (a constant 2100-Hz tone).

called subscriber information (CSI)
The identifier for the answering fax endpoint. This identifier is sent in the T.30 protocol and is generally the telephone number of the fax endpoint.

calling tone (CNG tone)
The distinctive tone generated by a fax endpoint when placing a call (a constant 1100-Hz tone that is on for 1/2 second, off for 3 seconds).

call vectoring
A System 85 R2V4, Generic 2, and Generic 3 feature that uses a vector (switch program) to allow a switch administrator to customize the behavior of calls sent to an automatic call distribution (ACD) group.

card cage
An area within the Intuity AUDIX LX hardware platform that contains and secures all of the standard and optional circuit cards used in the system.

cartridge tape drive
A high-capacity data storage/retrieval device that can be used to transfer large amounts of information onto high-density magnetic cartridge tape based on a predetermined format. This tape is to be removed from the system and stored as a backup.

CAS
See *call accouting system*.

CCA
See *call classification analysis.*

CDH
See *call data handler process*.

CDR
See *call detail recording*.

CDRU
See *call detail recording utility (CDRU).*

CED tone
See *called tone*.

CELP
See *code excited linear prediction*.

central office (CO)
An office or location in which large telecommunication equipment such as telephone switches and network access facilities are maintained. In a CO, private customer lines are terminated and connected to the public network through common carriers.

central processing unit (CPU)
The component of the computer that manipulates data and processes instructions coming from software.

channel
A telecommunications transmission path for voice and/or data.

channel capacity
A measure of the maximum bit rate through a channel.

class of restriction (COR)
A feature that allows up to 64 classes of call-origination and call-termination restrictions for telephones, telephone groups, data modules, and trunk groups. See also *class of service*.

class of service (COS)
The standard set of Intuity AUDIX LX features given to subscribers when they are first administered (set up with a voice mailbox). See also *class of restriction*.

clear to send (CTS)
Located on Pin 5 of the 25-conductor RS-232 interface, CTS is used in the transfer of data between the computer and a serial device.

client
A computer that sends, receives and uses data, but that also shares a larger resource whose function is to do most data storage and processing. For Intuity AUDIX LX Message Manager, the subscriber's PC running Message Manager is the client. See also *server*.

CMS
See *call management system*.

CNG tone
See *calling tone*.

CO
See *central office*.

COR
See *class of restriction*.

COS
See *class of service*.

code excited linear prediction (CELP)
An analog-to-digital voice coding scheme.

collocated
A Intuity AUDIX LX system installed in the same physical location as the host switch. See also *local installation*.

collocated adjunct
Two or more adjuncts that are serving the same switch (that is, each has voice port connections to the switch) or that are serving different switches but can be networked through a direct RS-232 connection due to their proximity.

comcode
A numbering system for telecommunications equipment used by Avaya Technologies. Each comcode is a 9-digit number that represents a specific piece of hardware, software, or documentation.

command
An instruction or request given by an administrator to the software to perform a particular function. An entire command consists of the command name and options. Also, one-key or two-key touch tones that control a mailbox activity or function.

community
A group of telephone subscribers administered with special send and receive messaging capabilities. A community is typically comprised of people who need full access to each other by telephone on a frequent basis. See also *default community*.

compound message
A message that combines a voice message and a fax message into one unit, which Intuity AUDIX LX then
handles as a single message.

configuration
The particular combination of hardware and software components selected for a system, including external connections, internal options, and peripheral equipment.

controller circuit card
A circuit card used on a computer system that controls its basic functionality and makes the system operational. These cards are used to control magnetic peripherals, video monitors, and basic system communications.

COS
See *class of service*.

coverage path
The sequence of alternate destinations to which a call to a subscriber on a Intuity AUDIX LX system is automatically sent when it is not answered by the subscriber. This sequence is set up on the switch, normally with the Intuity AUDIX LX system as the last or only destination.

CPU
See *central processing unit*.

cross connect
Distribution-system equipment used to terminate and administer communication circuits.

cross connection
The connection of one wire to another, usually by anchoring each wire to a connecting block and then placing a third wire between them so that an electrical connection is made.

CSI
See *called subscriber information*.

CTS
See *clear to send*.

D

DAC
See *dial access code*.

database
A structured set of files, records, or tables. Also, a collection of filesystems and files in disk memory that store the voice and nonvoice (program data) necessary for Intuity AUDIX LX system operation.

data communications equipment (DCE)
Standard type of data interface normally used to connect to data terminal equipment (DTE) devices. DCE devices include the data service unit (DSU), the isolating data interface (IDI), and the modular processor data module (MPDM).

data communications interface unit (DCIU)
A switch device that allows nonvoice (data) communication between a Intuity AUDIX LX system and a Avaya switch. The DCIU is a high-speed synchronous data link that communicates with the common control switch processor over a direct memory access (DMA) channel that reads data directly from FP memory.

data link
A term used to describe the communications link used for data transmission from a source to a destination, for example, a telephone line for data transmission.

data service unit (DSU)
A device used to access digital data channels. DATAPHONE II 2500 DSUs are synchronous data communications equipment (DCE) devices used for extended-local Intuity AUDIX LX system con-

nections. The 2600 or 2700 series may also be used; these support diagnostic testing and the DATAPHONE II Service network system.

data set
Another term for a modem, although a data set usually includes the telephone. See also *modem*.

data terminal equipment (DTE)
Standard type of data interface normally used for the endpoints in a connection. Normally the Intuity AUDIX LX system, most terminals, and the switch data link are DTE devices.

DBP
See *data base processor*.

DCE
See *data communications equipment*.

DCIU
See *data communications interface unit*.

DCP
See *digital communications protocol*.

DCS
See *distributed communications system*.

debug
See *troubleshooting*.

dedicated line
A communications path that does not go through a switch. A dedicated (hard-wired) path can be formed with directly connected cables. MPDMs, DSUs, or other devices can also be used to extend the distance that signals can travel directly through the building wiring.

default
A value that is automatically supplied by the system if no other value is specified.

default community
A group of telephone subscribers administered with restrictions to prevent them from sending messages to or receiving messages from other communities. If a system is administered to use communities, the default community is comprised of all the AUDIX subscribers defined on that system.

default print number
The subscriber-administered extension to which autoprinted faxes are redirected upon their receipt into the subscriber's mailbox. This default print destination is also provided as a print option when the subscriber is manually retrieving and printing faxes from the mailbox.

delivered message
A message that has been successfully transmitted to a recipient's incoming mailbox.

demand testing
Testing performed on request (usually by service personnel).

diagnostic testing
A program run for testing and determining faults in the system.

dial-ahead/dial-through
The act of interrupting or preceding Intuity AUDIX LX system announcements by typing (buffering) touch-tone commands in the order the system would normally prompt for them.

dial string
A series of numbers used to initiate a call to a remote AMIS machine. A dial string tells the switch what type of call is coming (local or long distance) and gives the switch time to obtain an outgoing port, if applicable

dialed number identification service (*DNIS_SVC)
An available channel service assignment on the Intuity AUDIX LX system. Assigning this service to a channel permits the Intuity AUDIX LX system to interpret information from the switch and operate the appropriate application for the incoming telephone call.

DID
See *direct inward dialing*.

digital communications protocol (DCP)
A 64-Kbps digital data transmission code with a 160-Kbps bipolar bit stream divided into two information (I) channels and one signaling (S) channel.

digital networking
A method of transferring messages between messaging systems in a digital format. See also *Intuity AUDIX LX Digital Networking*.

digital signal processor (DSP)
A specialized digital microprocessor that performs calculations on digitized signals that were originally analog and then sends the results on.

DIP switch
See *dual in-line package switch*.

direct inward dialing (DID)
The ability for an outside caller to call an internal extension without having to pass through an operator or attendant.

direct memory access (DMA)
A quick method of moving data from a storage device directly to RAM, which speeds processing.

directory
1. A Intuity AUDIX LX AUDIX LX feature that allows you to hear a subscriber's name and extension after pressing ☐ ☐ N at the activity menu. 2. A group of related files accessed by a common name in software.

display terminal
A data terminal with a screen and keyboard used for displaying Intuity AUDIX LX screens and performing maintenance or administration activities.

distributed communications system (DCS)
A network of two or more switches that uses logical and physical data links to provide full or partial feature transparency. Voice links are made using tie trunks.

distribution list
See *mailing list*.

DMA
See *direct memory access*.

DNIS
See *dialed number identification service*.

domain
An area where data processing resources are under common control. The Intuity AUDIX LX system is one domain and an e-mail system is another domain.

DSP
See *digital signal processor*.

DSU
See *data service unit*.

DTE
See *data terminal equipment*.

DTMF
See *dual tone multifrequency*.

dual in-line package (DIP) switch
A small switch, usually attached to a printed circuit card, in which there are only two settings: on or off (or 0 or 1). DIP switches are used to configure the card in a semipermanent way.

dual language greetings
The capability of Intuity AUDIX LX subscribers to create personal greetings in two different languages— one in a primary language and one in a secondary language. This capability exists when the multilingual feature is turned on, and the prompts for subscriber mailboxes can be in either of the two languages.

dual tone multifrequency (DTMF)
A way of signaling consisting of a pushbutton or touch-tone dial that sends out a sound consisting of two discrete tones that can be picked up and interpreted by telephone switches.

E

EIA interface
A set of standards developed by the Electrical Industries Association (EIA) that specifies various electrical and mechanical characteristics for interfaces between electronic devices such as computers, terminals, and modems. Also known as *RS-232*.

ELA
See Enhanced-List Application.

electronic mail
See *e-mail*.

electrostatic discharge (ESD)
The discharge of a static charge on a surface or body through a conductive path to ground, ESD can damage integrated circuits.

e-mail
The transfer of a wide variety of message types across a computer network (LAN or WAN). E-mail messages may be text messages containing only ASCII files or may be complex multimedia messages containing embedded voice messages, software files, and images.

enabled/disabled
The state of a hardware device that indicates whether it is available for use by the Intuity AUDIX LX system. Devices must be equipped before they can be enabled (made active). See also *equipped/unequipped*.

endpoint
See *fax endpoint*.

enhanced call transfer
An Intuity AUDIX LX feature that allows compatible switches to transmit messages digitally over the BX.25 (data) link. This feature is used for quick call transfers and requires a fully integrated digital switch. Callers can only transfer to other extensions in the switch dial plan.

Enhanced-List Application (ELA)
An Intuity AUDIX LX option that facilitates message delivery to large numbers of recipients. There can be up to 100 enhanced lists per system, each of which can contain up to 1500 addresses.

enhanced serial data interface (ESDI)
A software-controlled and hardware-controlled method used to store data on magnetic peripherals.

equipped/unequipped
The state of a networking channel that indicates whether Intuity AUDIX LX software has recognized it. Devices must be equipped before they can be enabled (made active). See also *enabled/disabled*.

error message
A message on the screen indicating that something is wrong within the system and possibly suggesting how to correct it.

errors
Problems detected by the system during operation and recorded in the maintenance log. Errors can produce an alarm if they exceed a threshold.

escape from reply
The ability to quickly return to getting messages for a subscriber who encounters a problem trying to respond to a message. To escape, the subscriber presses #.

escape to attendant
An Intuity AUDIX LX feature that allows subscribers with the call answer feature to have a personal attendant or operator administered to pick up their unanswered calls. A system-wide extension could also be used to send callers to a live agent.

ESD
See *electrostatic discharge*.

ESDI
See *enhanced serial data interface*.

event
An informational messages about the system's activities. For example, an event is logged when the system is rebooted. Events may or may not be related to errors and alarms.

F

facilities restriction level (FRL)
A value that determines which types of calls the subscribers of a switch are allowed to make.

facility out-of-service (FOOS)
State of operation during which the current channel is not receiving a dial tone and is not functioning.

facsimile
1. A digitized version of written, typed, or drawn material transmitted over telephone lines and printed out elsewhere. 2. Computer-generated text or graphics transmitted over computer networks. A computer-generated fax is typically printed to a fax machine, but can remain stored electronically.

fax
See *facsimile*.

fax addressing prefix
Uniquely identifies a particular fax nodepoint to the Intuity AUDIX LX system. Used by the system as a "template" to differentiate all call-delivery machines on the network from each other.

fax endpoint
Any device capable of receiving fax calls. Fax endpoints include fax machines, individual PC fax modems, fax ports on LAN fax servers, and ports on fax-enabled messaging systems.

fax print destination prefix
A dial string that the Intuity AUDIX LX system adds to the fax telephone number the subscriber enters to print a fax. The system takes the full number (fax print destination prefix + fax telephone extension) and hunts through the machine translation numbers until it finds the specific fax end-point.

field
An area on a screen, menu, or report where information can be typed or displayed.

FIFO
See *first-in/first-out*.

file
A collection of data treated as a basic unit of storage.

filename
Alphanumeric characters used to identify a particular file.

file redundancy
See *mirroring*.

file system
A collection of related files (programs or data) stored on disk that are required to initialize a Intuity AUDIX LX system.

first-in/first-out (FIFO)
A method of processing telephone calls or data in which the first call or data to be received is the first call or data to be processed.

F key
See *function key*.

FNPAC
See *foreign numbering-plan area code*.

FOOS
See *facility out-of-service*.

foreign exchange (FX)
A central office (CO) other than the one providing local access to the public telephone network.

foreign numbering-plan area code (FNPAC)
An area code other than the local area code that must be dialed to call outside the local geographical area.

format
To set up a disk, floppy diskette, or tape with a predetermined arrangement of characters so that the system can read the information on it.

FRL
See *facilities restriction level*.

function
Individual steps or procedures within a mailbox activity.

function key (F key)
A key on a computer keyboard programmed to perform a defined function when pressed. The user interface for the Intuity AUDIX LX system defines keys F1 through F8.

FX
See *foreign exchange*.

G

Generic 1, 2, or 3
Avaya switch system software releases, designed for serving large communities of System 75 and System 85 subscribers.

generic tape
A copy of the standard software and stand-alone tape utilities that is shipped with a new Intuity AUDIX LX system.

GOS
See *grade of service*.

grade of service (GOS)
A parameter that describes the delays in accessing a port on the Intuity AUDIX LX system. For example, if the GOS is P05, 95% of the callers hear the system answer and 5% hear ringing until a port becomes available to answer the call.

guaranteed fax
A feature of Intuity AUDIX LX FAX Messaging that temporarily stores faxes sent to a fax machine. In cases where the fax machine is busy or does not answer a call, the call is sent to an Intuity AUDIX LX mailbox.

guest password
A feature that allows callers who are not Intuity AUDIX LX subscribers to leave messages on the system by dialing a subscriber's extension and entering a system-wide guest password.

H

hard disk drive
A high-capacity data-storage and data-retrieval device that is located inside a computer. A hard disk drive stores data on nonremovable high-density magnetic media based on a predetermined format for retrieval by the system at a later date.

hardware
The physical components of a computer system. The central processing unit, disks, tape, and floppy drives are all hardware.

header
Information that the system creates to identify a message. A message header includes the originator or recipient, type of message, creation time, and delivery time.

help
A command run by pressing HELP or CTRL ? on a Intuity AUDIX LX display terminal to show the options available at your current screen position. In the Intuity AUDIX LX system, press ▢ H on the telephone keypad to get a list of options. See also *on-line help*.

host switch
The switch directly connected to the Intuity AUDIX LX system over the data link. Also, the physical link connecting a Intuity AUDIX LX system to a distributed communications system (DCS) network.

hunt group
A group of analog ports on a switch usually administered to search for available ports in a circular pattern.

I

I/O
Input/output.

IDI
See *isolating data interface*.

IMAPI
See *INTUITY messaging application programming interface*.

INADS
See *initialization and administration system*.

information service
See *bulletin board*.

initialization
The process of bringing a system to a predetermined operational state. The start-up procedure tests hardware; loads the boot filesystem programs; locates, mounts, and opens other required filesystems; and starts normal service.

initialization and administration system (INADS)
A computer-aided maintenance system used by remote technicians to track alarms.

initialize
To start up the system for the first time.

input
A signal fed into a circuit or channel.

integrated services digital network (ISDN)
A network that provides end-to-end digital connectivity to support a wide range of voice and data services.

integrated voice processing CELP (IVC6) card
A computer circuit card that supports both fax processing and voice processing capabilities. It provides two analog ports to support six analog channels. All telephone calls to and from the Intuity AUDIX LX system are processed through the IVC6 card.

interface
The device or software that forms the boundary between two devices or parts of a system, allowing them to work together. See also *user interface*.

internal e-mail
Software on a PC that provides messaging capability between subscribers on the same AUDIX system, or to administered remote AUDIX systems and subscribers. Subscribers can create, send, and receive a message that contains multiple media types; specifically, voice, fax, text, or file attachments (software files, such as a word processing or spreadsheet file).

interrupt request (IRQ)
Within a PC, a signal sent from a device to the CPU to temporarily suspend normal processing and transfer control to an interrupt handling routine.

Intuity AUDIX LX Digital Networking
A Intuity AUDIX LX feature that allows customers to link together up to 500 remote Intuity AUDIX LX machines for a total of up to 500,000 remote subscribers. See also *digital networking*.

INTUITY Message Manager
A Windows-based software product that allows Intuity AUDIX LX subscribers to receive, store, and send their voice/FAX messages from a PC. The software also enables subscribers to create and send multimedia messages that include voice, fax, file attachments, and text.

INTUITY messaging application programming interface (IMAPI)
A software function-call interface that allows Intuity AUDIX LX to interact with Intuity AUDIX LX Message Manager.

IRQ
See *interrupt request*.

ISDN
See *integrated services digital network*.

isolating data interface (IDI)
A synchronous, full duplex data device used for cable connections between a Intuity AUDIX LX GPSC-AT/E card and the switch data communications interface unit (DCIU).

IVC6
See *integrated voice processing CELP (IVC6) card.*

J

jumper
Pairs or sets of small prongs or pins on circuit cards and mother boards the placement of which determines the particular operation the computer selects. When two pins are covered, an electrical circuit is completed. When the jumper is uncovered, the connection is not made. The computer interprets these electrical connections as configuration information.

K

L

label
The name assigned to a disk device (either a removable tape cartridge or permanent drive) through software. Cartridge labels may have a generic name (such as “3.3”) to show the software release, or a descriptive name if for back-up copies (such as “back01”). Disk drive labels usually indicate the disk position (such as “disk00” or “disk02”).

LAN
See *local area network*.

last-in/first-out (LIFO)
A method of processing telephone calls or data in which the last call (or data) received is the first call (or data) to be processed.

LCD
See *liquid crystal display*.

leave word calling (LWC)
A switch feature that allows the calling party to leave a standard (nonvoice) message for the called party using a feature button or dial access code.

LED
See *light emitting diode*.

LIFO
See *last-in/first-out*.

light emitting diode (LED)
A light on the hardware platform that shows the status of operations.

liquid crystal display (LCD)
The 10-character alphanumeric display that shows the status of the system, including alarms.

load
The process of reading software from external storage (such as disk) and placing a copy in system memory.

local area network (LAN)
A network of PCs that communicate with each other and that normally share the resources of one or more servers. Operation of Intuity AUDIX LX Message Manager requires that the Intuity AUDIX LX system and the subscribers’ PCs be on a LAN.

local AUDIX machine
The Intuity AUDIX LX system where a subscriber's Intuity AUDIX LX mailbox is located. All subscribers on this home machine are called *local subscribers*.

local installation
A switch, adjunct, or peripheral device installed physically near the host switch or system. See also *collocated*.

local network
An Intuity AUDIX LX Digital Network in which all Intuity AUDIX LX systems are connected to the same switch.

login
A unique code a subscriber must enter to gain approved access to the Intuity AUDIX LX system. See also *password*.

login announcement
A feature enabling the system administrator and other designated subscribers to create a mail message that is automatically played to all Intuity AUDIX LX subscribers every time they log in to the system.

Lotus Notes
Information management software for work groups that allows individuals to share and manipulate information over a local or wide area network

LWC
See *leave word calling*.

M

magnetic peripherals
Data storage devices that use magnetic media to store information. Such devices include hard disk drives, floppy disk drives, and cartridge tape drives.

mailbox
A portion of disk memory allotted to each Intuity AUDIX LX system subscriber for creating and storing outgoing and incoming messages.

mailing list
A group of subscriber addresses assigned a list ID# and public or private status. A mailing list may be used to simplify the sending of messages to several subscribers.

maintenance
The process of identifying system errors and correcting them, or taking steps to prevent problems from occurring.

major alarm
An alarm detected by Intuity AUDIX LX software that affects at least one fourth of the Intuity AUDIX LX ports in service. Often a major alarm indicates that service is affected.

MANOOS
See *manually out-of-service*.

manually out-of-service
State of operation during which a unit has been intentionally taken out of service.

MAP
See *multi-application platform*.

mean time between failures
The average time a manufacturer estimates will elapse before a failure occurs in a component or system.

media type
The form a message takes. The media types supported by the Intuity AUDIX LX system are voice, text, file attachments, and fax.

memory
A device that stores logic states such that data can be accessed and retrieved. Memory may be temporary (such as system RAM) or permanent (such as disk).

menu
A list of options displayed on a computer terminal screen or spoken by a voice processing system. Subscribers choose the option that reflects what action they want the system to take.

menu tree
The way in which nested automated attendants are set up.

message categories
Groups of messages in Intuity AUDIX LX subscribers' mailboxes. Categories include *new*, *unopened*, and *old* for the incoming mailbox and *delivered*, *accessed*, *undelivered*, *undeliverable* (not deliverable), and *file cabinet* for the outgoing mailbox.

message component
A media type included in a multimedia message. These types include voice, text, file attachments, and fax messages.

message delivery
An optional Intuity AUDIX LX feature that permits subscribers to send messages to any touch-tone telephone, as long as the telephone number is in the range of allowable numbers. This feature is an extension of the AMIS analog networking feature and is automatically available when the AMIS feature is activated.

Message Manager
See *INTUITY Message Manager*.

message waiting indicator (MWI)
An indicator that alerts Intuity AUDIX LX subscribers that they have received new mail messages. An MWI can be an LED or neon lamp, or an audio tone.

message waiting lamp (MWL)
See *message-waiting indicator*.

migration
An installation that moves data to the Intuity AUDIX LX system from another type of Avaya messaging system, for example, from AUDIX R1, DEFINITY AUDIX, or AUDIX Voice Power.

minor alarm
An alarm detected by maintenance software that affects less than one fourth of the Intuity AUDIX LX ports in service, but has exceeded error thresholds or may impact service.

mirroring
A Intuity AUDIX LX system feature that allows data from crucial filesystems to be continuously copied to back-up (mirror) filesystems while the system is running. If the system has some problem where an original filesystem cannot be used, the backup filesystem is placed in service automatically.

ML
MERLIN LEGEND application identifier. See *application identifier*.

mode code
A string of touch-tones from a switch in an inband integration. A mode code may send the Intuity AUDIX LX system information such as call type, calling party, called party, and on/off signals for message waiting indicators.

modem
A device that converts data from a form that is compatible with data processing equipment (digital) to a form compatible with transmission facilities (analog), and vice-vera.

modular
A term that describes equipment made of plug-in units that can be added together to make the system larger, improve its capabilities, or expand its size.

modular processor data module (MPDM)
A data device that converts RS-232C or RS-449 protocol signals to digital communications protocol (DCP) used by System 75/85, Generic1, and Generic 3 switches. MPDMs can connect the Intuity AUDIX LX system to a switch DCIU or SCI link or connect terminals to a switch port card.

MPDM
See *modular processor data module*.

MT
Maintenance application identifier. See *application identifier*.

MTBF
See *mean time between failures*.

multi-application platform (MAP)
The computer hardware platform used by the Intuity AUDIX LX system.

multilingual feature
A feature that allows announcement sets to be active simultaneously in more than one language on the system. Mailboxes can be administered so that subscribers can hear prompts in the language of their choice.

MWI
See *message waiting indicator*.

N

networking
See *Intuity AUDIX LX Digital Networking*.

networking prefix
A set of digits that identifies a Intuity AUDIX LX machine.

night attendant
The automated attendant created on a MERLIN LEGEND switch that automatically becomes active during off-hours. The night attendant substitutes for one or more daytime attendants.

not deliverable message
A message that could not be delivered after a specified number of attempts. This usually means that the subscriber's mailbox is full.

NPA
See *numbering plan area*.

NT
Networking application identifier. See *application identifier*.

MWL
See *message waiting lamp*.

numbering plan area
Formal name for 3-digit telephone area codes in North America. Within an area code, no two telephone lines may have the same 7-digit phone number. The code is often designated as *NXX*, to indicate the three digits.

O

off-hook
See *switch hook*.

on-hook
See *switch hook*.

on-line help
A Intuity AUDIX LX system feature that provides information about user interface windows, screens, and menus by pressing a predetermined key. See also *help*.

open systems interconnection (OSI)
An internationally accepted framework of standards for communication between systems made by different vendors.

operating system (OS)
The set of software programs that runs the hardware and interprets software commands.

option
A choice selected from a menu, or an argument used in a command line to specify program output by modifying the execution of a command. When you do not specify any options, the command executes according to its default options.

OS
See *operating system*.

OSI
See *open systems interconnection*.

outcalling
A Intuity AUDIX LX system feature that allows the system to dial subscribers' numbers to inform them they have new messages.

outgoing mailbox
A storage area on the Intuity AUDIX LX system where subscribers can keep copies of messages for future reference or action.

P

parallel transmission
The transmission of several bits of data at the same time over different wires. Parallel transmission of data is usually faster than serial transmission.

password
1. A word or character string recognized automatically by the Intuity AUDIX LX system that allows a subscriber access to his/her mailbox or a system administrator access to the system data base. 2. An alphanumeric string assigned to local and remote networked machines to identify the machines or the network. See also *login.*

password aging
An Intuity AUDIX LX feature that allows administrators to set a length of time after which a subscriber's AUDIX password or the administrator's system password expires. The subscriber or administrator must then change the password.

PBX
See *private branch exchange*.

PC
See *power converter.*

PDM (processor data module)
See *modular processor data module (MPDM)*.

peripheral device
Equipment such as a printer or terminal that is external to the Intuity AUDIX LX cabinet, but necessary for full operation and maintenance of the system. Also called a *peripheral*.

personal directory
An Intuity AUDIX LX feature that allows each subscriber to create a private list of customized names.

personal fax extension
See *secondary extension*.

PI
See *processor interface*.

PIB
See *processor interface*.

pinouts
The signal description per pin number for a particular connector.

PMS
See *property management system*.

port
A connection or link between two devices that allows information to travel to a desired location. For example, a switch port connects to a Intuity AUDIX LX voice port to allow a caller to leave a message.

POST
See *power-on self test*.

power on self test (POST)
A set of diagnostics stored in ROM that tests components such as disk drives, keyboard, and memory each time the system is booted. If problems are identified, a message is sent to the screen.

priority call answer
An Intuity AUDIX LX feature that allows subscribers to designate a call answer message as a priority message. To make a message a priority message, the caller presses 2 after recording.

priority messaging
An Intuity AUDIX LX feature that allows some subscribers to send messages that are specially marked and preferentially presented to recipients. See also *priority outcalling*.

priority outcalling
An Intuity AUDIX LX feature that works with the priority messaging feature by allowing the message recipient to elect to be notified by outcalling only when a priority message has been received. See also *priority messaging*.

private branch exchange (PBX)
An analog, digital, or electronic telephone switching system where data and voice transmissions are not confined to fixed communications paths, but are routed among available ports or channels. See also *switch*.

private mailing list
A list of addresses that only the Intuity AUDIX LX system subscriber who owns it can access.

private messaging
A feature of Intuity AUDIX LX that allows a subscriber to send a message that cannot be forwarded by the recipient.

processor data module (PDM)
See *modular processor data module (MPDM)*.

processor interface (PI)
A System 75, Generic 1, Generic 3i, Generic 3s, and Generic 3vs switch data link. Also called *processor interface board (PIB)*.

programmed function key
See *function key*.

property management system (PMS)
A product used by lodging establishments to automate the management of guest records, reservations, room assignments, and billing. In an integrated PMS environment, special software links the PMS to the Intuity AUDIX LX Lodging system so that both systems share a common set of messages and commands.

protocol
A set of conventions or rules governing the format and timing of message exchanges (signals) to control data movement and the detection and possible correction of errors.

public mailing list
A list of addresses that any Intuity AUDIX LX subscriber can use if that subscriber knows the owner's list ID number and extension number. Only the owner can modify a public mailing list.

pulse-to-tone converter
A device connected to the switch that converts signals from a rotary pulses to touch tone signals. This device allows callers to use rotary telephones to access options in a Intuity AUDIX LX subscriber's mailbox or in an automated attendant.

R

RAM
See *random access memory*.

random access memory (RAM)
The memory used in most computers to store the results of ongoing work and to provide space to store the operating system and applications that are actually running at any given moment.

read-only memory (ROM)
A form of computer memory that allows values to be stored only once; after the data is initially recorded, the computer can only read the contents. ROM is used to supply constant code elements such as bootstrap loaders, network addresses, and other more or less unvarying programs or instructions.

reboot
See *boot*.

remote access
Sending and receiving data to and from a computer or controlling a computer with terminals or PCs connected through communication (that is, telephone) links.

remote installation
A system, site, or piece of peripheral equipment that is installed in a different location from the host switch or system.

remote maintenance
The ability of Avaya personnel to interact with a remote computer through a telephone line or LAN connection to perform diagnostics and some system repairs. See also *remote service center*.

remote network
A network in which the systems are integrated with more than one switch.

remote service center
A Avaya or Avaya-certified organization that provides remote support to Intuity AUDIX LX customers. Depending upon the terms of the maintenance contract, your remote service center may be notified of all major and minor alarms and have the ability to remotely log in to your system and remedy problems. See also *remote maintenance.*

remote terminal
A terminal connected to a computer over a telephone line.

remote subscribers
Intuity AUDIX LX subscribers whose mailboxes reside on a remote Intuity AUDIX LX Digital Networking machine.

REN
See *ringer equivalence number*.

reply loop escape
An Intuity AUDIX LX feature that allows a subscriber the option of continuing to respond to a message after trying to reply to a nonsubscriber message.

reply to sender
An Intuity AUDIX LX feature that allows subscribers to immediately place a call to the originator of an incoming message if that person is in the switch's dial plan.

request to send (RTS)
One of the control signals on an EIA-232 connector that places the modem in the originate mode so that it can begin to send.

restart
1. A Intuity AUDIX LX feature that allows Intuity AUDIX LX subscribers who have reached the system through the call answer feature to access their own mailboxes by entering the ☐ R (Restart) command. This feature is especially useful for long-distance calls or for subscribers who want to access the Intuity AUDIX LX system when all the ports are busy. 2. The reinitialization of certain software, for example, *restarting* the messaging system.

restore
The process of recovering lost or damaged files by retrieving them from available back-up tapes, floppy diskette, or another disk device.

retention time
The amount of time messages are saved on disk before being automatically deleted from a subscriber's mailbox.

reusable upgrade kit (RUK)
A package shipped to the customer's site prior to an upgrade that contains materials the technician needs to complete the installation. This package includes an A/B switch box, a keyboard, a 25-foot coaxial cable, two T adapters, and terminations to a LAN circuit card. It remains the property of Avaya once the installation is finished.

right-to-use (RTU) fee
A charge to the customer to access certain functions or capacities that are otherwise restricted, for example, additional voice or networking ports or hours of speech storage. Avaya Technologies personnel can update RTU parameters either at the customer's site or remotely via a modem.

ringer equivalence number (REN)
A number required in the United States for registering your telephone equipment with a service provider.

ROM
See *read-only memory*.

RS-232
See *EIA interface.*

RTS
See *request to send*.

RUK
See *reusable upgrade kit*.

S

scan
To automatically play mail messages, headers, or both.

scheduled delivery time
A time and/or date that an Intuity AUDIX LX subscriber can assign to a message that tells the system when to deliver it. If a delivery time is omitted, the system sends the message immediately.

screen
That portion of the Intuity AUDIX LX user interface through which most administrative tasks are performed. Intuity AUDIX LX screens request subscriber input in the form of a command from the `enter command:` prompt.

SCSI
See *small computer system interface*.

secondary extension
A second, fax-dedicated extension that directs incoming faxes directly into a subscriber's mailbox without ringing the telephone. The secondary extension shares the same mailbox as the voice extension, but acts like a fax machine. Also called *personal fax extension*.

serial transmission
The transmission of one bit at a time over a single wire.

server
A computer that processes and stores data that is used by other smaller computers. For Intuity AUDIX LX Message Manager, Intuity AUDIX LX is the server. See also *client*.

shielded cables
Cables that are protected from interference with metallic braid or foil.

SID
See *switch integration device*.

SIMM
See *single in-line memory module*.

simplified message service interface (SMSI)
Type of data link connection to an integrated 1A ESS or 5ESS switch in the Intuity AUDIX LX system.

simplified message desk interface (SMDI)
Also known as station message desk interface. Type of data link from the central office that contains information and instructions for the Intuity AUDIX LX system. With SMDI, the caller need not re-enter the called number once the call terminates to the Intuity AUDIX LX system. See also *simplified message service interface*.

single in-line memory module (SIMM)
A method of containing random access memory (RAM) chips on narrow strips that attach directly to sockets on the CPU circuit card. Multiple SIMMs are sometimes installed on a single CPU circuit card.

small computer systems interface (SCSI)
An interface standard defining the physical, logical, and electrical connections to computer system peripherals such as tape and disk drives.

SMDI
See *station message desk interface*.

SMDR
See *station message detail recording*.

SMSI
See *simplified message service interface*.

SP
signal processor

SSP
scaleable signal processor

station message desk interface (SMDI)
See *simplified message desk interface*.

station message detail recording
See *call detail recording (CDR)*.

subscriber
A person who has been assigned the ability to access the Intuity AUDIX LX Voice Messaging system.

surge
A sudden rise and fall of voltage in an electrical circuit.

surge protector
A device that plugs into the telephone system and the commercial AC power outlet to protect the telephone system from damaging high-voltage surges.

SW
Switch integration application identifier. See *application identifier*.

switch
An automatic telephone exchange that allows the transmission of calls to and from the public telephone network. See also *private branch exchange (PBX)*.

switched access
A connection made from one endpoint to another through switch port cards. This allows the endpoint (such as a terminal) to be used for several applications.

switch hook
The device at the top of most telephones that is depressed when the handset is resting in the cradle (that is, when the telephone is *on hook*). This device is raised when the handset is picked up (that is, when the telephone is *off hook*).

switch-hook flash
A signaling technique in which the signal is originated by momentarily depressing the switch hook.

switch integration
Sharing of information between a messaging system and a switch to provide a seamless interface to callers and system subscribers. A fully integrated Intuity AUDIX LX system, for example, answers each incoming telephone call with information taken directly from the switch. Such information includes the number being called and the circumstances under which the call was sent to it, for example, covered from a busy or unanswered extension.

switch integration device (SID)
A combination of hardware and software that passes information from the switch to the Intuity AUDIX LX system thus allowing it to share information with non-Avaya switches. The operation of a SID is unique to the particular switch with which it interfaces.

switch network
Two or more interconnected switching systems.

synchronized mailbox
A mailbox that is paired with a corresponding mailbox in another domain and linked via software that keeps track of changes to either mailbox. When the contents of one mailbox change, the software replicates that change in the other mailbox.

synchronizer
The name given to the trusted server by the e-mail vendor, Lotus Notes.

synchronous communication
A method of data transmission in which bits or characters are sent at regular time intervals, rather than being spaced by start and stop bits. See also *asynchronous communication*.

synchronous transmission
A type of data transmission where the data characters and bits are exchanged at a fixed rate with the transmitter and receiver synchronized. This allows greater efficiency and supports more powerful protocols.

System 75
An advanced digital switch manufactured by Avaya Technologies that supports up to 800 lines for voice and data communications.

System 85
An advanced digital switch manufactured by Avaya Technologies that supports up to 3000 lines for voice and data communications.

system configuration
See *configuration*.

T

T.30
The standard for Group III fax machines that covers the protocol used to manage a fax session and negotiate the capabilities supported by each fax endpoint.

tape cartridge
One or more spare removable cartridges required to back up system information.

tape drive
The physical unit that holds, reads, and writes to magnetic tape.

TCP/IP
See *transmission control protocol/internet protocol*.

TDD
See *telecommunications device for the deaf*.

TDM
See *time division multiplexing*.

telecommunications device for the deaf (TDD)
A device with a keyboard and display unit that connects to or substitutes for a telephone. The TDD allows a deaf or hearing-impaired person to communicate over the telephone lines with other people who have TDDs. It also allows a deaf person to communicate with the Intuity AUDIX LX system.

terminal
See *display terminal*.

terminal type
A number indicating the type of terminal from which a subscriber is logging in to the Intuity AUDIX LX system. Terminal type is the last required entry before gaining access to the Intuity AUDIX LX display screens.

terminating resistor
A grounding resistor placed at the end of a bus, line, or cable to prevent signals from being reflected or echoed.

time division multiplexing (TDM)
A method of serving multiple channels simultaneously over a common transmission path by assigning the transmission path sequentially to the channels, with each assignment being for a discrete time interval.

tip/ring
A term used to denote the analog telecommunications interface.

tone generator
A device acoustically coupled to a rotary telephone used to produce touch-tone signals.

traffic
The flow of attempts, calls, and messages across a telecommunications network.

translations
Software assignments that tell a system what to expect on a certain voice port or the data link, or how to handle incoming data. Translations customize the Intuity AUDIX LX system and switch features for subscribers.

transmission control protocol/internet protocol (TCP/IP)
A suite of protocols that allow disparate hosts to connect over a network. Transmission control protocol (TCP) organizes data on both ends of a connection and ensures that the data that arrives matches that which was sent. Internet protocol (IP) ensures that a message passes through all the necessary routers to the proper destination.

T/R
See *tip/ring*.

troubleshooting
The process of locating and correcting errors in computer programs (also called *debugging)* or systems.

trusted server
A server that uses IMAPI to access an Intuity AUDIX LX mailbox on behalf of a subscriber and is empowered to do everything to a subscriber message that Intuity AUDIX LX can do.

TTS
Text-to-Speech

U

UCD
See *uniform call distribution*.

Undelete
An Intuity AUDIX LX feature that allows subscribers to restore the last message deleted by pressing ☐ U.

undelivered message
A message that has not yet been sent to an Intuity AUDIX LX subscriber's incoming mailbox. The message resides in the sender's outgoing mailbox and may be modified or redirected by the sender.

unequipped
See *equipped/unequipped*.

unfinished message
A message that was recorded but not approved or addressed, usually as the result of an interrupted Intuity AUDIX LX session. Also called *working message*.

uniform call distribution (UCD)
The type of call-distribution group (or hunt group) of analog port cards on some switches that connects subscribers to the Intuity AUDIX LX system. System 75, Generic 1, Generic 3, and some central office switches use UCD groups. See also *call-distribution group*.

uninterruptable power supply (UPS)
An auxiliary power unit that provides continuous power in cases where commercial power is lost.

UNIX operating system
A multi-user, multi-tasking computer operating system.

upgrade
An installation that moves a Intuity AUDIX LX system to a newer release.

untouched message
An Intuity AUDIX LX feature that allows a subscriber to keep a message in its current category by using the ☐ ☐ H (Hold) command. If the message is in the new category, message-waiting indication remains active (for example, the message-waiting lamp remains lit).

UPS
See *uninterruptable power supply*.

U. S. 123
An alternate announcement set in U. S. English whose prompts use numbers, not letters, to identify telephone keypad presses. For example, a prompt might say, "*Press star three,"* instead of, *"Press star D*."

user interface
The devices by which subscribers access their mailboxes, manage mailing lists, administer personal greetings, and use other messaging capabilities. Types of user interfaces include a touch-tone telephone keypad and a PC equipped with Intuity AUDIX LX Message Manager.

subscriber population
A combination of different types of subscribers on which Intuity AUDIX LX configuration guidelines are based.

V

vector
A customized program in the switch for processing incoming calls.

VM
Voice messaging application identifier. See *application identifier*.

voice link
The Intuity AUDIX LX analog connection(s) to a call-distribution group (or hunt group) of analog ports on the switch.

voice mail
See *voice message*.

voice mailbox
See *mailbox*.

voice message
Digitized information stored by the Intuity AUDIX LX system on disk memory. Also called *voice mail*.

voice port
The IVC6 port that provides the interface between the Intuity AUDIX LX system and the analog ports on the switch.

voice terminal
A telephone used for spoken communications with the Intuity AUDIX LX system. A touch-tone telephone with a message-waiting indicator is recommended for Intuity AUDIX LX subscribers.

voicing
1. Speaking a message into the Intuity AUDIX LX system during recording. 2. Having the system play back a message or prompt to a subscriber.

VP
Voice platform application identifier. See *application identifier*.

VR
Voice response application identifier. See *application identifier*.

W

WAN
See *wide area network*.

wide area network (WAN)
A data network typically extending a local area network (LAN) over telephone lines to link with LANS in other buildings and/or geographic locations.

window
That portion of the Intuity AUDIX LX user interface through which you can view system information or status.

Index

Numerics

885A adapter
tip/ring connections, 4-2

A

acceptance testing, 3-3
administration
automated attendants, 3-3
INTUITY system, 3-3
MERLIN LEGEND/MAGIX, 3-2, 3-5
networking, 3-6
administration port
MERLIN LEGEND/MAGIX, 4-5, 4-6
allowed list
assign to voice ports, 5-11
creation procedure, 5-10
security, A-6
allowed lists
integration planning, 2-5
AMIS Networking
administration, 3-6
restrictions, 2-5
AMIS networking, 4-14
security, A-7
application names, 2-2
automated attendants
administration, 3-3
definition, 1-7
enhancements, 1-8
holiday schedule concepts, 1-11
multiple, 1-7
Night Service implementation, 1-11
night status concepts, 1-10
operations, 1-7
primary mode, 1-8
schedule concepts, 1-9, 1-10
secondary (backup) mode, 1-8
security, A-3
security tips, A-4
tenant service concepts, 1-11
Avaya Intuity Fax Messaging, 1-6
features, 1-6
Avaya security offerings, A-11
Avaya Statement of Direction (toll fraud), A-10

B

basic call transfer
security, A-8
BTM-012, 1-16
BTM-016, 1-16
bulletin board service
definition, 1-7
business schedules
entering, 6-13
integration planning, 2-13
use in call handling, 1-13

C

call answer service
definition, 1-5
call detail recording, A-9
call handling
business schedule, 1-13
holiday schedules, 1-14
routing table, 1-11
calling group
definition, 1-2
group type assignment, 5-9
hunt type assignment, 5-6
member assignment, 5-4
receiver assignment, 5-8
trunk or pool assignment, 5-5
channel information, 2-9
chared ports
port considerations, 1-18
COM2 restriction, 4-4
connection, hardware platform, 3-2
connectivity
administration port more than 15 meters, 4-6
administration port within 15 meters, 4-5
dedicated line remote access, 4-19
networking, 4-15
remote access dial-up, 4-25
remote maintenance (COM2), 4-17
serial port configuration, 4-4
SMDR farther than 15 meters, 4-10
tip/ring, 4-2
corporate security (Avaya), A-12
coverage group
definition, 1-2
coverage paths
definition, 1-2
crisis intervention
toll fraud, A-12

cut-to-service
MERLIN LEGEND/MAGIX, 3-5

D

dedicated ports
port considerations, 1-18
dial plan digits
integration planning, 2-7
worksheet, 2-8
digital networking
high-speed not supported, 1-5
digital networking, see also networking
direct to voice mail button
description and use, 1-7
disallowed list
creation procedure, 5-13
integration planning, 2-5
switch security, A-6
voice port assignment, 5-14
DVM, see direct to voice mail

F

forms
MERLIN LEGEND/MAGIX, 2-2
fraud, see toll fraud
functional differences, 1-5

G

greetings
busy and no answer, 1-5
group calling
integration planning, 2-4
group coverage
integration planning, 2-4
member assignment, 5-3
receiver assignment, 5-8

H

hardware platform
connection, 3-2
holiday schedules
automated attendant concepts, 1-11
description, 1-14
entering, 6-14
integration planning, 2-15
worksheet, 2-16

I

ial, 3-2
integration
INTUITY system procedure, 6-1
integration Planning
disallowed lists, 2-5
integration planning
allowed lists, 2-5
application names, 2-2
business schedules, 2-13
channel information, 2-9
dial plan digits, 2-7
digits in dial plan, 2-7
group calling, 2-4
group coverage, 2-4
holiday schedules, 2-15
INTUITY AUDIX subscribers, 2-3
INTUITY system, 2-7, 2-9
number plan, 2-2
restrictions, 2-5
routing table, 2-9
voice ports, 2-3
INTUITY AUDIX
automated attendant service, 1-7
bulletin board service, 1-7
call answer service, 1-5
security, A-7
subscribers, integration planning, 2-3
voice mail service, 1-6
INTUITY system
entering business schedules, 6-13
entering holiday schedules, 6-14
entering routing table, 6-16
initial administration, 3-3
integration planning, 2-7, 2-9
integration procedure, 6-1
optional packages, 3-3
trunks, integration planning, 2-3

Intuity system
integration concepts, 1-1, 2-1, 3-1, 3-3, 6-1

L

Lodging
trunks, 2-4

M

mailbox administration
security, A-7
MAP/5
port considerations, 1-18
MERLIN LEGEND/MAGIX
administration, 3-5
administration port, 4-5, 4-6
allowed list assignment, 5-11
allowed list creation, 5-10
calling group coverage receiver assignment, 5-8
calling group hunt type assignment, 5-6
calling group member assignment, 5-4
calling group trunk or pool assignment, 5-5
calling group type assignment, 5-9
cut-to-service, 3-5
disallowed list creation procedure, 5-13
forms, 2-2
group coverage member assignment, 5-3
group coverage receiver assignment, 5-8
initial administration, 3-2
integration concepts, 1-1, 2-1, 3-1, 3-3, 6-1
night service group assignment, 5-16, 5-17
night service implementation, 1-11
primary automated attendant implementation, 1-8
reliable disconnect, 5-2
secondary automated attendant implementation, 1-9
SMDR port, 4-10

N

networking
administration, 3-6
AMIS, 3-6, 4-14
digital, 3-6
introduction, 4-14
low-speed connections, 4-15

night service
based on switch status, 1-5
group assignment, 5-16, 5-17
implementation, 1-11
night status
automated attendant concepts, 1-10
number plan, 2-2

O

optional INTUITY packages, 3-3
outcalling
definition, 1-6
security, A-7

P

Phantom number, 1-6
Port Administration, 1-18
port considerations, 1-18
dedicated ports, 1-18
MAP/5 limitations, 1-18
shared ports, 1-18
primary mode automated attendants, 1-8
inplementation, 1-8

R

reliable disconnect, 5-2
remote access
dedicated line connection local, 4-20
dedicated line connection remote, 4-21
dedicated line connections, introduction, 4-19
dial-up line connection, 4-25
introduction, 4-19
remote maintenance
connections, 4-17
introduction, 4-17
restrict outward dialing, A-6
restrict toll areas, A-6
restrictions
AMIS networking, 2-5
integration planning, 2-5
ring-blocking, 1-16
routing tables
description of, 1-11
entering, 6-16
integration planning, 2-9
worksheet, 2-12

S

schedule concepts
automated attendant, 1-10
automated attendants, 1-9
secondary mode automated attendants, 1-8
implementation, 1-9
security
AMIS networking, A-7
automated attendant tips, A-4
automated attendants, A-3
Avaya corporate, A-12
Avaya offerings, A-11
basic call transfer, A-8
disallowed list, A-6
introduction, A-1
INTUITY AUDIX, A-7
mailbox administration, A-7
outcalling, A-7
restrict toll areas, A-6
subscriber password tips, A-5
switch, A-1
switch, allowed lists, A-6
switch, disallowed list, A-6
switch, restrict outward dialing, A-6
switch, restrict toll areas, A-6
tips, A-1
voice messaging, A-2
voice messaging system tips, A-2
security tips
automated attendant, A-4
subscriber password, A-5
switch, A-1
voice messaging system, A-2
serial port connections
introduction, 4-4
SMDR port
connecting remote, 4-10
MERLIN LEGEND/MAGIX, 4-10
starting the voice system, 6-10
stopping the voice system, 6-10
subscriber password guidelines, A-5
switch Integrations
definition, 1-2
switch integrations
functional differences, 1-5
switch security
allowed lists, A-6
restrict outward dialing, A-6

T

tenant service
automated attendant concepts, 1-11
This, 4-1
tip/ring connections
885A adapter, 4-2
tips
automated attendant security, A-4
subscriber password, A-5
switch security, A-1
voice messaging system security, A-2
To, 2-2
toll fraud
Avaya Statement of Direction, A-10
call detail recording, A-9
crisis intervention, A-12
detecting, A-9
INTUITY AUDIX traffic reports, A-9
touch-tone receivers, 1-16
traffic reports
detecting toll fraud, A-9
trunks
INTUITY system integration planning, 2-3
with Lodging, 2-4

V

VMI calling group
definition, 1-2
integrated VMI calling group, 1-3
linear hunt, 1-2
ring in, 1-2
voice mail service
definition, 1-6
voice message interface calling group
definition, 1-2
voice messaging
security, A-2
security tips, A-2
voice ports
all AUDIX must be in same calling group, 1-18
allowed list assignment, 5-11
disallowed list assignment, 5-14
integration planning, 2-3
INTUITY AUDIX system, 1-18
requirements, 1-16
voice system
starting, 6-10
stopping, 6-10

W

worksheet
dial plan digits, 2-8
holiday schedules, 2-16
worksheets
routing table, 2-12